AEROSPEC

TRANSPONDER / DME / ADS-B ANTENNA

INSTALLATION INSTRUCTIONS | MODEL AS-AV-74

CONGRATULATIONS AND THANK YOU

Thank you for choosing AEROSPEC! You have just purchased a high-quality product, designed for the aviation industry and crafted to meet the highest standards in aviation technology.

At AEROSPEC, we are committed to providing top-tier products and exceptional service. Your satisfaction is our main priority, and we are here to ensure that your product delivers optimal performance.

PRODUCT OVERVIEW

Product	**Transponder / DME / ADS-B Antenna**
Model	**AS-AV-74**
Application	**General Aviation**
Frequency range	**960 – 1220 MHz**

(ETSO authorization in progress)

AIR TEAM s.r.o.
Masarykovo namesti 354
664 71 Veverska Bityska
Czech Republic



Vojtech Vancal
Quality Manager

INSTALLATION INSTRUCTIONS

1) Choose a Mounting Site

Select a flat area on the underside of the aircraft for installation. Ensure the location is at least 18 inches away from any metal structures or protrusions to prevent interference and ensure optimal performance.

2) Drill Mounting Holes

Using the supplied template, mark and drill two holes for mounting and one for the cable connector. Be sure the template is properly aligned before drilling.

3) Attach the Antenna

Position the rubber pad between the antenna base and the aircraft's exterior surface. Insert the provided mounting screws and tighten them firmly. This ensures a secure fit and proper electrical contact with the aircraft's skin.

4) Connect the Coaxial Cable

Use a 50-ohm coaxial cable such as RG-58/U (not included). Attach a BNC male connector to the end of the cable that connects to the antenna. Fit the opposite end with a connector that is compatible with the aircraft's radio system.

AS-AV-74
MOUNTING TEMPLATE
(in millimetres)

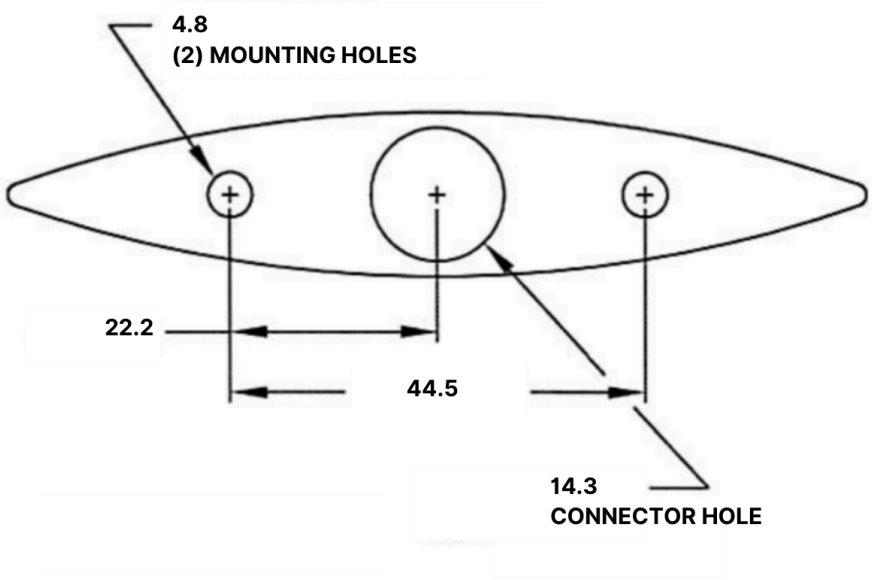

AS-AV-74
MOUNTING TEMPLATE
(in inches)

