AEROSPEC

TRANSPONDER / ADS-B / DME ANTENNA

TECHNICAL SPECIFICATION | MODEL AS-AV-74

ELECTRICAL SPECIFICATIONS

Frequency Range	**960 – 1220 MHz**
Impedance	**50 Ω (nominal)**
VSWR	**1.5:1 maximum**
Polarization	**Vertical**
Radiation Pattern	**Omni-directional**
RF Power Capacity	**2.5 kW peak**
Connector	**BNC female**
Applications	**Transponder, ADS-B, DME**

MECHANICAL SPECIFICATIONS

Max Height	**3.4 in (86.4 mm)**
Max Weight	**0.2 lbs (90 g)**
Housing / Base	**Aluminium alloy**
Cover Plate	**ABS**
Connector Material	**Brass, nickel plated**
Mounting	**2× #8-32 threaded studs**
Mounting Hole Spacing	**1.750 in (1 3/4)**
Base Plate Footprint	**4.1 × 1.1 in**

Scope of this document. This datasheet summarises the electrical and mechanical characteristics of the AEROSPEC AS-AV-74 antenna together with measured VSWR, radiation pattern, gain and efficiency data. Pattern data was recorded on a production sample across the full 960 to 1220 MHz band in 5 MHz steps at 1° angular resolution.

DIMENSIONAL DRAWING

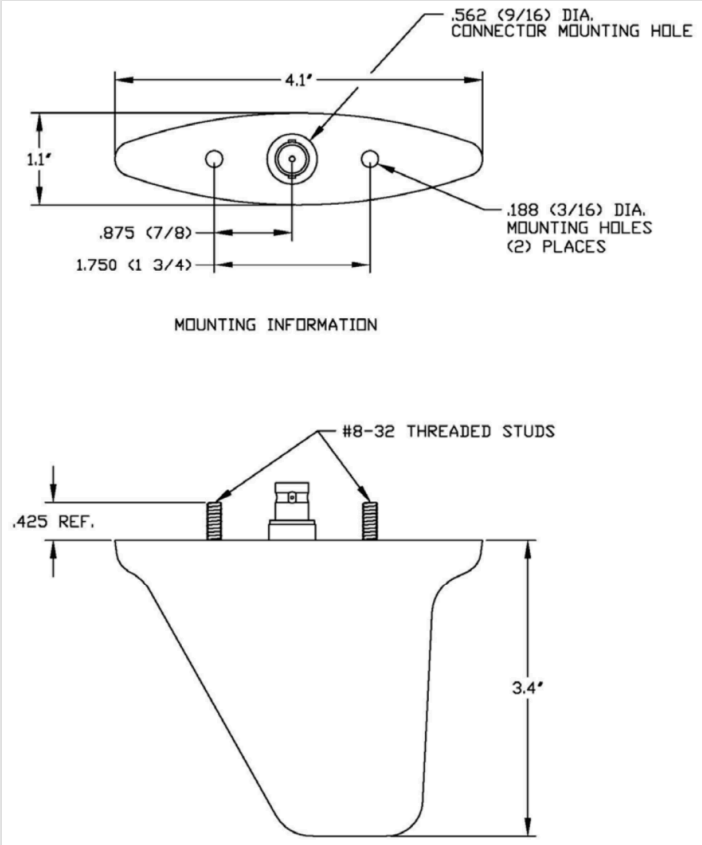

Mounting information and overall dimensions (inches)

VSWR MEASUREMENT

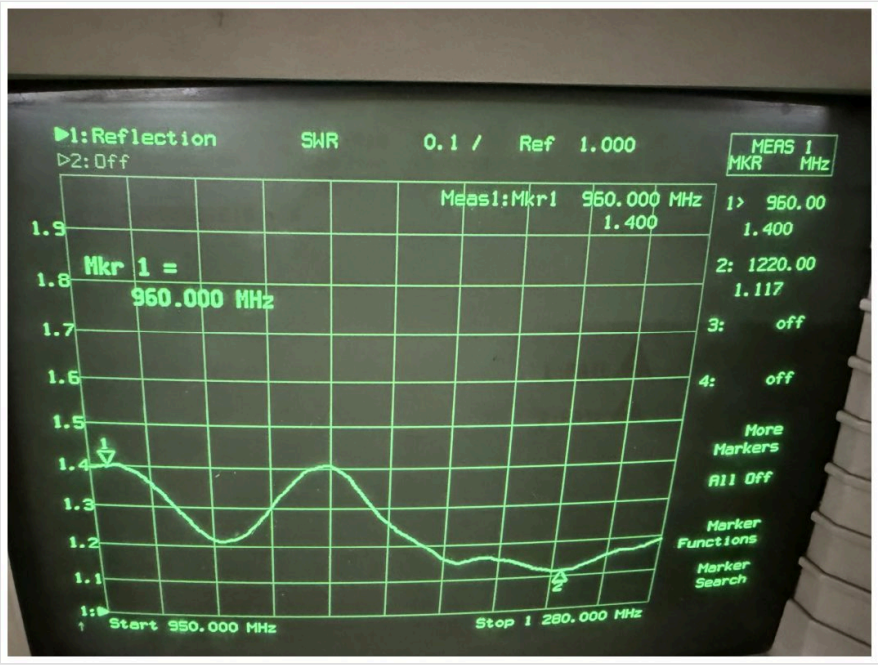

Measured VSWR, 950 – 1280 MHz. Marker 1: 960 MHz = 1.400 · Marker 2: 1220 MHz = 1.117

AZIMUTH RADIATION PATTERN

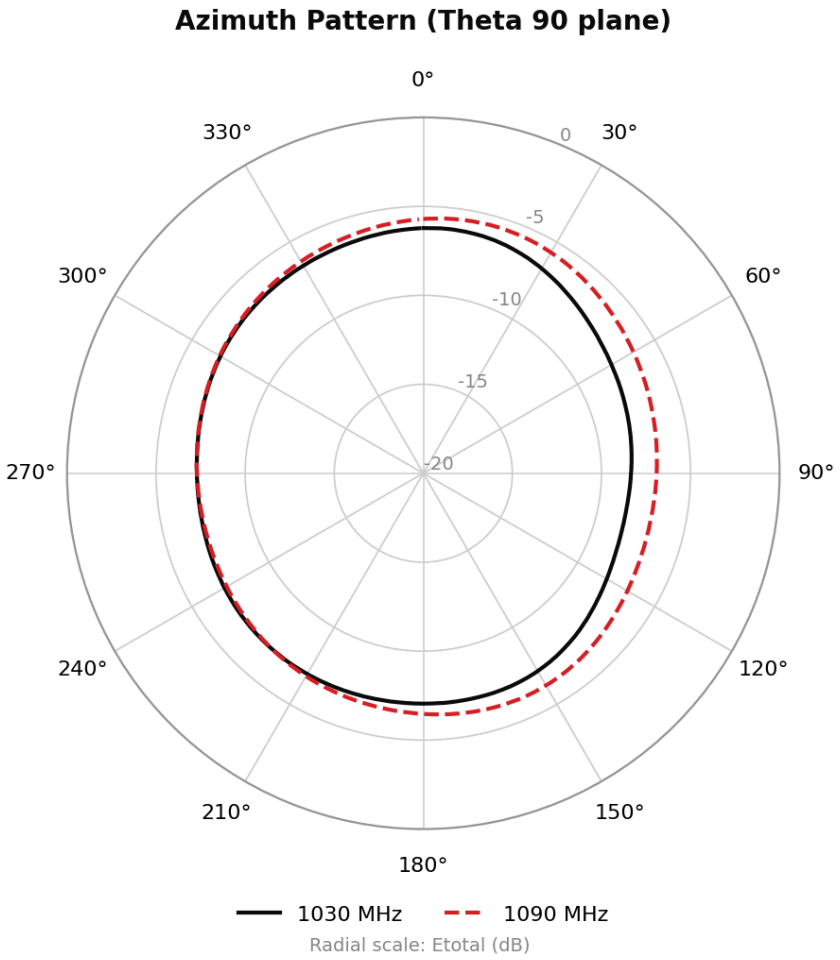

Horizontal plane cut (Theta 90°) at the transponder and ADS-B frequencies

MEASURED PERFORMANCE SUMMARY

FREQUENCY (MHZ)	PEAK GAIN (DBI)	RADIATION EFFICIENCY (%)	AZIMUTH ROUNDNESS (DB)	ELEVATION BEAMWIDTH (°)
960	-2.57	20.4	2.04	45
1000	-2.10	22.1	1.18	40
1030	-2.00	24.0	2.22	39
1090	-2.12	26.2	1.81	39
1150	-1.52	29.3	2.15	35
1220	-2.35	32.7	2.66	55

Azimuth roundness stays below 2.7 dB across the entire band, confirming uniform omni-directional coverage in the horizontal plane. Peak gain remains within –2.6 to –1.0 dBi over 960 to 1220 MHz.

ELEVATION RADIATION PATTERNS

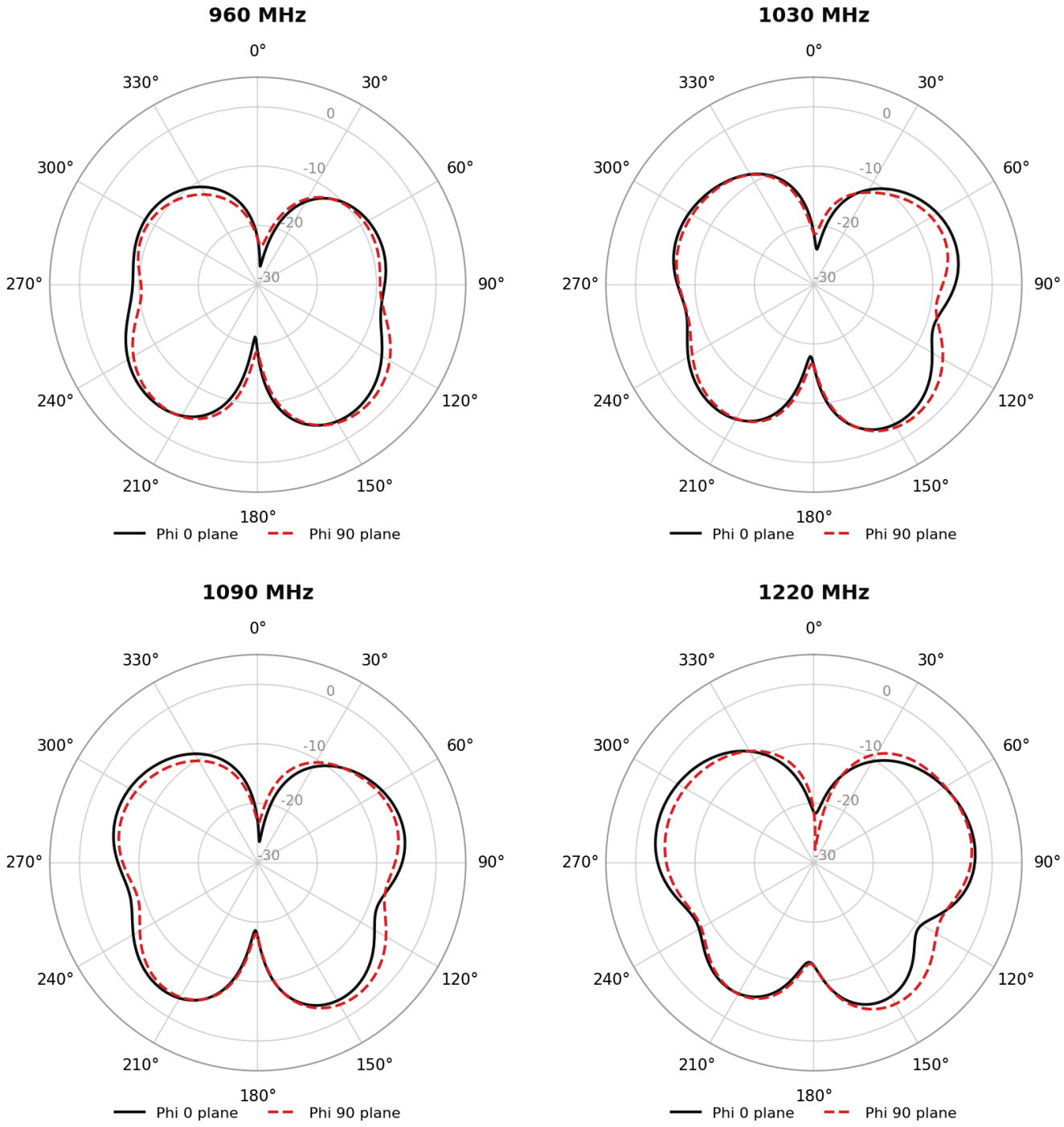

Vertical plane cuts in two orthogonal planes (Phi 0° and Phi 90°) at the band edges and at the transponder / ADS-B frequencies

The pattern shows the characteristic vertical monopole shape with maximum radiation towards the horizon and a null along the antenna axis. Close agreement between the Phi 0° and Phi 90° cuts confirms rotational symmetry.

OMNI-DIRECTIONAL CONSISTENCY

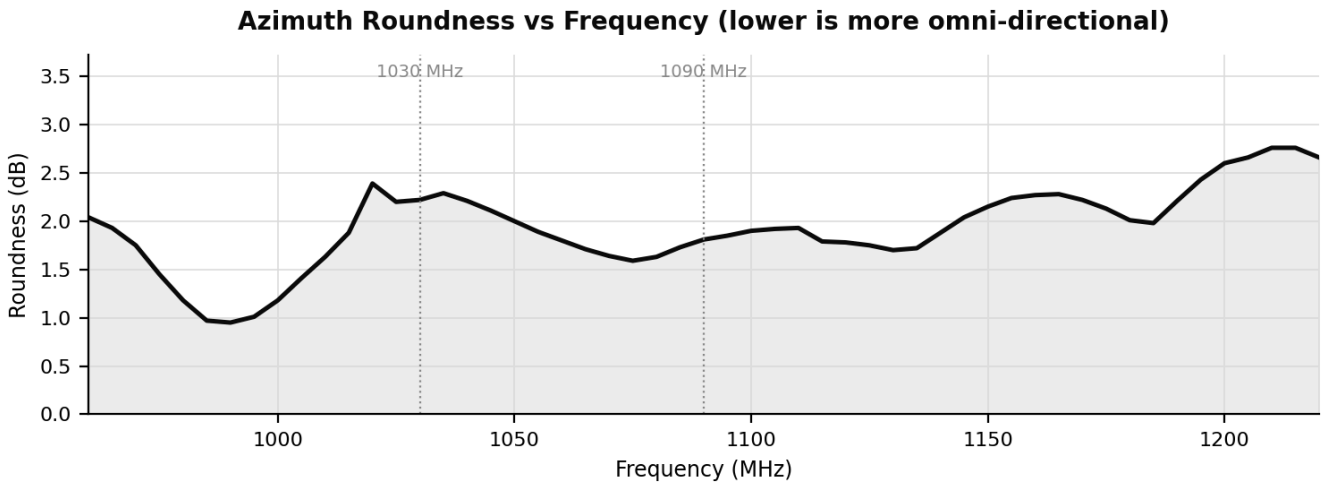

Azimuth roundness across the band. Values below 3 dB indicate uniform horizontal coverage

GAIN AND EFFICIENCY ACROSS THE BAND

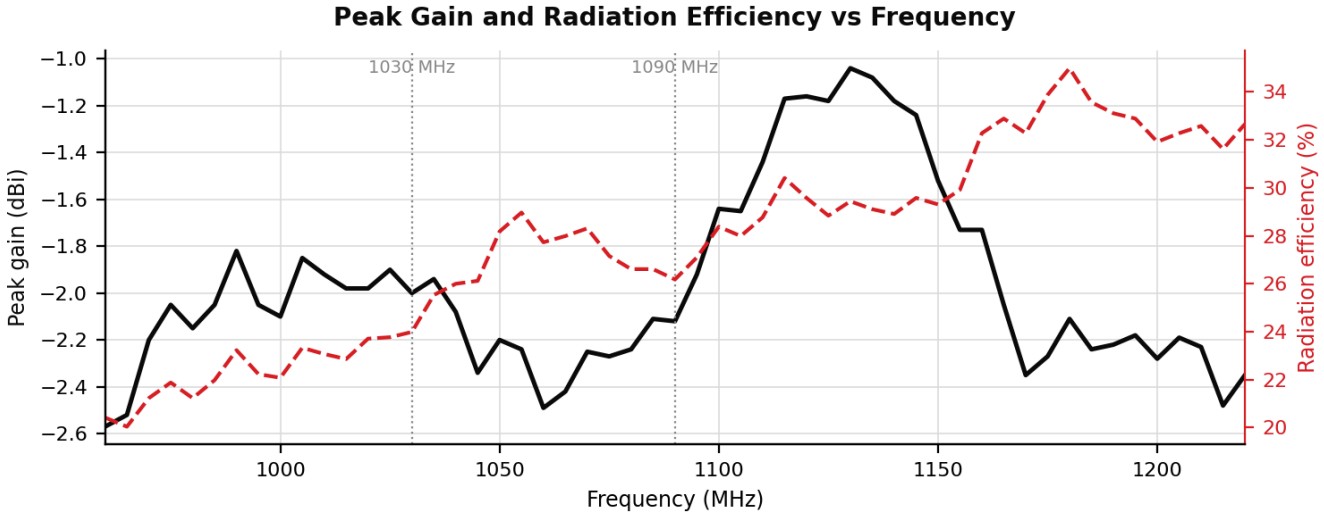

Peak gain (solid, left axis) and radiation efficiency (dashed, right axis), 960 to 1220 MHz

Measurement conditions. All radiation pattern, gain and efficiency data was measured on a production sample of the AS-AV-74 over the complete 960 to 1220 MHz operating band in 5 MHz steps with 1° angular resolution. Values are given as Etotal in dB. Polar plots are clipped at –30 dB for readability. Full measurement datasets for any individual frequency or cut plane are available on request.