ME406 Series
Emergency Locator Transmitter

Description, Operation, Installation and Maintenance Manual

This manual includes data for the equipment that follows:

Component	Part No.	Model No.
Emergency Locator Transmitter	453-6603	ME406
Emergency Locator Transmitter	453-6604	ME406HM

JULY 13/2023
25-62-30
570-1600 Rev. AG
Initial Issue JUN 30/2005
ARTEX PRODUCTS / ACR ELECTRONICS, INC.
5757 Ravenswood Rd, Ft. Lauderdale, FL 33312
Cage Code: 18560

NOTICES

THE INFORMATION CONTAINED HEREIN IS NOT PROPRIETARY.

Information in this manual is subject to change without notice. ACR Electronics makes no warranty, expressed or implied, with regard to this manual, including but not limited to any implied warranties of merchantability, fitness for a particular purpose, and non-infringement. In addition, ACR Electronics makes no warranty with regard to the documentation or data contained herein. ACR Electronics is not liable in the event of incidentals, special, consequential, or any other damages in connection with or arising from furnishing, performance, or use of this manual.

For further information contact Sales, ACR Electronics, 5757 Ravenswood Rd, Fort Lauderdale, FL 33312. Telephone (954) 981-3333.

AIRWORTHINESS LIMITATIONS

The Airworthiness limitations section is FAA approved and specifies inspections and other maintenance required under 14 CFR§ 43.16 and 91.403, unless an alternative program has been approved.

IMPORTANT NOTICE

ACR Electronics will be responsible for full distribution and revisions of ICA's (Instructions for Continued Airworthiness). For inquiries regarding the content and currency of this manual, contact ACR Electronics, 5757 Ravenswood Rd, Fort Lauderdale, FL 33312. Telephone (954) 981-3333.

RECORD OF REVISIONS

REVISION	CHANGE	DATE	REVISION	CHANGE	DATE
-	RELEASE	Jun 30/2005	W	ECO 16361	May 11/2016
A	DCN 2670	Nov 17/2005	Y	ECO 16495	Sept 07/2016
B	DCN 2777	May 01/2006	AA	ECO 16504	Dec 7/2016
C	DCN 2847	Aug 21/2006	AB	ECO 17024	Feb 28/2019
D	DCN 3007	May 21/2007	AC	ECO 17212	Feb 7/2020
E	DCN 3076	Sep 27/2007	AD	ECO 17261	Apr 7/2020
F	DCN 3182	Mar 03/2008	AE	ECO 17300	May 28/2020
G	DCN 3227	May 19/2008	AF	ECO 17652	Sept 13/2021
G	DCN 3413	Mar 30/2009	AG	ECO 18023	July 13/2023
H	DCN 3571	Jan 12/2010			
J	DCA W9414	Apr 06/2010			
K	ECO 14756	Jul 26/2011			
L	ECO 14850	Mar 09/2012			
M	ECO 15380	May 3/2013			
N	ECO 15420	Jun 25/2013			
P	ECO 15452	Aug 20/2013			
R	ECO 15493	Oct 03/2013			
U	ECO 15830	Dec 01/2014			
V	ECO 15937	Mar 19/2015			
V1	ECO D16236	Dec 08/2015			

SERVICE BULLETIN LIST

SERVICE BULLETIN NO	ISSUE DATE	SUBJECT	MANUAL REV NO	MANUAL REV DATE

LIST OF EFFECTIVE PAGES

SUBJECT	PAGE	DATE	SUBJECT	PAGE	DATE
Title Page	1	Jul 13/23	Test and Fault Isolation (cont.)	38	May 28/20
Notices	2	May 28/20	Removal	39	May 28/20
Record of Revisions	3	Jul 13/23		40	May 28/20
Service Bulletin List	4	May 28/20		41	May 28/20
List of Effective Pages	5	Jul 13/23		42	May 28/20
Table of Contents	6	May 28/20	Installation	43	May 28/20
	7	May 28/20		44	May 28/20
	8	May 28/20		45	May 28/20
List of Figures	9	May 28/20		46	May 28/20
Introduction	10	May 28/20		47	May 28/20
	11	May 28/20		48	May 28/20
	12	Jul 13/23		49	May 28/20
	13	Sept 13/21		50	May 28/20
	14	May 28/20		51	May 28/20
	15	May 28/20		52	May 28/20
	16	May 28/20		53	May 28/20
	17	May 28/20		54	May 28/20
Description and Operation	18	May 28/20		55	May 28/20
	19	May 28/20		56	May 28/20
	20	May 28/20		57	May 28/20
	21	May 28/20		58	May 28/20
	22	May 28/20		59	May 28/20
	23	May 28/20		60	May 28/20
	24	May 28/20		61	May 28/20
	25	May 28/20		62	May 28/20
Test and Fault Isolation	26	May 28/20		63	May 28/20
	27	May 28/20		64	May 28/20
	28	May 28/20		65	May 28/20
	29	May 28/20	Appendix A	66	May 28/20
	30	May 28/20		67	May 28/20
	31	May 28/20	Illustrated Parts List	68	May 28/20
	32	May 28/20		69	May 28/20
	33	May 28/20		70	May 28/20
	34	May 28/20		71	May 28/20
	35	May 28/20		72	May 28/20
	36	May 28/20		73	May 28/20
	37	May 28/20		74	May 28/20

TABLE OF CONTENTS

RECORD OF REVISIONS 3

SERVICE BULLETIN LIST 4

LIST OF EFFECTIVE PAGES 5

TABLE OF CONTENTS 6

LIST OF FIGURES 9

INTRODUCTION 10
1. Manual Usage 10
   A. General 10
   B. Application 10
2. Model Descriptions 11
   A. ME406 11
   B. ME406HM 11
3. Approvals 12
   A. ME406 and ME406HM 12
   B. Battery 12
   C. RTCA DO-160D Compliance 12
4. Frequency Allocations 14
   A. Application 14
   B. Discussion 14
5. List of Acronyms, Abbreviations, and Definitions 15
6. References 17
   A. Regulatory Documents 17
   B. Other Documents 17

DESCRIPTION AND OPERATION 18
1. Description 18
   A. Functional Overview 18
   B. Components 19
2. Operation 21
   A. Operational Overview 21
   B. Normal Operation 22
   C. Manual Activation 22
   D. ELT Reset 22
   E. Functional Check 22
3. Specifications 23
   A. Environmental and Physical 23
   B. Electrical 24
   C. Antennas 25

TEST AND FAULT ISOLATION 26
1. Inspection and Test Regulatory Requirements 26
   A. United States 26
   B. Canada 26

C. Other Countries 26
2. Inspection and Test Procedures 27
A. Checklist 27
B. Preparation 28
C. Coax Cable and Wiring Connections Inspection – Item 1 28
D. Mounting Tray and Hardware Inspection – Item 2 28
E. Battery Pack Inspection – Item 3 28
F. G-Switch Functional Check – Item 4a 29
G. G-Switch Functional Check (Helicopter Models Only)– Item 4b 29
H. Performance Testing Setup 30
I. 121.5 MHz Frequency Measurement – Item 5a 31
J. Audio Modulation Check – Item 5b 31
K. 121.5 MHz Power Output Measurement – Item 5c 31
L. 406 MHz Frequency Measurement – Item 5d 32
M. 406 MHz Power Output Measurement – Item 5e 32
N. Current Draw Test – Item 5f 32
O. Digital Message Verification – Item 5g 34
P. ELT Reset Check – Item 5h 35
Q. Installed Transmitter Test – Item 6 35
R. Antenna Test – Item 7 36
S. Inspection and Test Documentation – Item 8 36
3. Fault Isolation 36
A. Self-Test Error Troubleshooting Guidelines 36
B. ELT Troubleshooting Guidelines 39

REMOVAL 40
1. ELT 40
A. ELT Removal 40
2. Battery 42
A. Battery Pack Removal 42
3. Material or Equipment Return 43
A. Shipment Information 43
B. Return Material Authorization 43

INSTALLATION 44
1. Regulatory Requirements and Guidelines 44
A. For US Registered aircraft: 44
B. TSO C126, Paragraph D 44
C. FAA 44
D. Canada 45
E. Other Countries 45
F. RTCA 45
2. Mounting Tray 46
A. Location 46
B. Installation 49
3. Antenna 50
A. Selection 50
B. Location 50
C. Installation 50
4. Remote Switch 52
A. Location 52

B. Installation 52
5. Buzzer 53
A. Location 53
B. Installation 53
6. Wiring 54
A. General Considerations and Recommendations 54
B. Remote Switch Harness Fabrication 57
C. ELT D-Sub Plug Installation 58
D. Cockpit Remote Switch 9-Pin Plug Installation 59
E. Wiring Installation 60
F. Antenna Connection 60
G. Cockpit Remote Switch Power Connection 60
H. Remote Switch Alternate Power Source 60
I. Airframe Ground Connections 60
J. Buzzer Connections 61
K. Remote Switch Final Installation 61
7. ELT Installation 61
A. Installation and Test 61
B. Harness ELT D-Sub Plug Sealing 63
C. Installation Documentation 63
8. Battery Pack Installation 63
A. Battery Reinstallation 63
B. New Battery Installation 65
9. Helicopter Installations - Special Considerations 65
A. Background 65
B. Recommendations 65
C. Orientation 66

APPENDIX A – ELT REGISTRATION 67
1. Background Information 67
A. Hex ID Code 67
B. Reason for Registration 67
C. Registration Information Resources 67
2. Registration 67
A. Responsibility 67
B. Required Information 67
C. Where to Register 68

ILLUSTRATED PARTS LIST 69
1. Introduction 69
A. Purpose 69
B. IPL Usage Guide 69
2. Manufacturer Name and Address 69
A. Ordering Information 69
3. Explanation of Detailed Parts List Entries 70
A. Fig # & Item Column 70
B. Part # Column 70
C. Nomenclature Column 70
D. UPA (Units Per Assembly) Column 71
4. Detailed Parts List 72

LIST OF FIGURES

Figure 1 ELT Orthogonal Axes 11
Figure 2 ME406 Series ELT and Mounting Tray Assembly 19
Figure 3 Remote Switch Front View 19
Figure 4 Buzzer 20
Figure 5 Battery Pack Assembly 20
Figure 6 Antennas 20
Figure 7 ELT Operational Flow Diagram 21
Figure 8 ELT Orthogonal Axes 30
Figure 9 Performance Testing Equipment Setup 31
Figure 10 Current Draw Test Setup 33
Figure 11 406 MHz Message Example 34
Figure 12 ELT Removal Sequence 40
Figure 13 Metal Strap Opening 41
Figure 14 Battery Pack Removal 42
Figure 15 ME406 Series ELT Outline and Dimensions 47
Figure 16 ME406 Metal Strap Minimum Clearance Dimensions 48
Figure 17 Typical Mounting Tray Installation 49
Figure 18 Rod Antenna 110-338 and Whip Antenna 110-773 Outlines and Dimensions 51
Figure 19 Remote Switch Outline and Dimensions 52
Figure 20 Buzzer Outline and Dimensions 53
Figure 21 Metal Airframe Wiring Diagrams 55
Figure 22 Composite Airframe Wiring Diagrams 56
Figure 23 Remote Switch Harness Arrangement 57
Figure 24 D-Sub Plug Assembly 59
Figure 25 ELT Installation Sequence 61
Figure 26 Velcro Strap Installation & Inspection 62
Figure 27 Battery Pack Installation 64
Figure 28 ELT Orthogonal Axes 66
Figure 29 ME406 Series ELT Main Assembly and Installation 72
Figure 30 Electrical Components 73
Figure 31 Antennas 74

INTRODUCTION

TASK 25-62-30-990-801

1. Manual Usage

SUBTASK 25-62-30-990-001

A. General

1) This manual describes the operation, installation, and maintenance of the Model ME406 Series emergency locator transmitter (ELT). This information is provided to ensure initial and continued airworthiness. Information presented in this manual is accurate at time of printing, but is subject to change. Refer to the Artex products web site at www.acrartex.com for the latest information and any updates to this manual.
2) Information on COSPAS-SARSAT emergency locator beacon registration requirements and procedures is provided in Appendix A – ELT Registration on page 67.
3) Web links provided in this manual were accurate at time of printing, but may be subject to change.
4) ACR Electronics reserves the right to add approved components to the ELT system; including, but not limited to antennas, remote switches, and coaxial cables.
5) Regulatory references contained herein are generally confined to United States and Canadian requirements and, in any case, should not be considered all encompassing. Consult your national aviation authority for applicable requirements.

SUBTASK 25-62-30-990-002

B. Application

1) This manual constitutes supporting data/documentation for the ME406 Series ELT, including:
    a) Description and Operation
    b) Test and Fault Isolation (includes inspection criteria)
    c) Removal
    d) Installation
    e) Registration
    f) Illustrated Parts List
2) In the United States, the ME406 Series ELT must be installed and maintained in accordance with the requirements herein and 14 CFR, FAR Parts 43, and 91; and other airworthiness requirements, as applicable.
3) In Canada, the ME406 Series ELT must be installed and maintained in accordance with the requirements herein and Canadian Aviation Regulations (CAR), Part V, Paragraph 551.104 and other CAR airworthiness requirements, as applicable.
4) ME406 Series ELT installation and maintenance in all other countries must comply with the requirements herein and applicable national airworthiness requirements.
5) The accessories (i.e., remote switch and antennas) addressed in this manual are the accessories most commonly associated with the ME406 Series ELT. Other options, such as a different remote switch configuration or a navigation interface, should be installed and maintained in accordance with the written instructions specific to the accessory.

    NOTE: Contact ACR Electronics, Inc., for optional accessories approved for use with a ME406 Series ELT.
6) To ensure proper operation, only parts listed in the Illustrated Parts List of this manual or those recommended by ACR Electronics, Inc., may be used as replacement parts for the ME406 Series ELT.

TASK 25-62-30-990-802

2. Model Descriptions

SUBTASK 25-62-30-990-001

A. ME406

1) The ME406 is a type AF (Automatic Fixed) beacon, which transmits on 121.5 and 406 MHz.
2) The ME406 ELT is enclosed in an impact resistant plastic casing and mounts on a tray made of similar material.
3) When ordered as a system, an installation kit, cockpit remote switch, coax cables, audible buzzer, and fixed antenna are provided.

SUBTASK 25-62-30-990-002

B. ME406HM

1) The ME406HM ELT is designed for helicopter installations and features a 5-axis G-Switch module in addition to the primary G-switch, which is oriented to line-of-flight. This design allows the ELT to be activated in all six axes. See Figure 1 ELT Orthogonal Axes.
2) The ME406HM is identical to the ME406 in all other aspects.

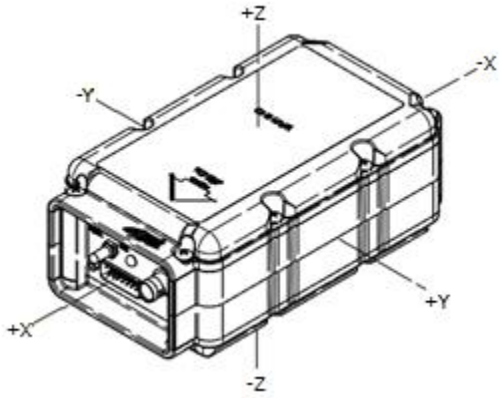

Figure 1 ELT Orthogonal Axes

TASK 25-62-30-990-803

3. Approvals

SUBTASK 25-62-30-990-001

A. ME406 and ME406HM

1) FAA TSO C126, Type AF
   a) The conditions and tests required for TSO approval of this article are minimum performance standards. It is the responsibility of those installing this article either on or within a specific type or class of aircraft to determine that the aircraft installation conditions are within TSO standards. TSO articles must have separate approval for installation in an aircraft. The article may be installed only if performed under 14 CFR Part 43 or the applicable airworthiness requirements.
2) Transport Canada - Approval Letter File Reference 5012-E3-4 (3708020)
3) Industry Canada - Certification Number 1215B-ME406AF
4) ETSO 2C126 - EASA.IM.21O.416 (ME406) and EASA.IM.21O.608 (ME406HM)
5) COSPAS-SARSAT - Certificate No. 152, 188, 197 and 242

SUBTASK 25-62-30-990-002

B. Battery

CAUTION: Lithium battery safety concerns include the possibility of fire, venting violently, and venting of toxic gases.

1) The lithium battery pack used on the ME406 Series ELT is certified under TSO C126.
   a) The conditions and tests required for TSO approval of this battery are minimum performance standards. It is the responsibility of those desiring to install this battery in a specific type or class of aircraft to determine that the aircraft installation conditions are within the TSO standards. The battery may be installed only if further evaluation by applicant documents an acceptable installation and is approved by the Administrator.

SUBTASK 25-62-30-990-003

C. RTCA DO-160D Compliance

1) DO-160D Environmental Categories: D1XBC[204][204]XRXXFXXZAZA[204]H[XXXX]XXA
2) The DO-160D environmental categories breakdown is detailed in Table 1 on page 13.

CATEGORY	SECTION	DESCRIPTION
D1	4.0	Temperature/Altitude
X	4.5.4	In-Flight Loss of Cooling
B	5.0	Temperature Variation
C	6.0	Humidity
204	7.0/8.0	Operational Shock and Crash Safety/Vibration
X	9.0	Explosion
R	10.0	Waterproofness
X	11.0	Fluids Susceptibility
X	12.0	Sand and Dust
F	13.0	Fungus
X	14.0	Salt Spray
X	15.0	Magnetic Effect
Z	16.0	Power Input
A	17.0	Voltage Spike
Z	18.0	Audio Frequency Susceptibility
A	19.0	Induced Signal Susceptibility
204	20.0	Radio Frequency Susceptibility
H	21.0	Emission of RF Energy
XXXX	22.0	Lightning
X	23.0	Lightning Direct Effects
X	24.0	Icing
A	25.0	ESD

Table 1 Environmental Categories Breakdown

TASK 25-62-30-990-804

4. Frequency Allocations

SUBTASK 25-62-30-990-001

A. Application

1) This section addresses the 406.0-406.1 MHz transmitter window and the specific frequency band allocations residing above 406.025 MHz, beginning with 406.028 MHz, which are assigned or reserved within the 406.0-406.1 MHz distress frequency window.

SUBTASK 25-62-30-990-002

B. Discussion

1) The 406 MHz transmitter frequency of the ME406 Series ELT was originally 406.028 MHz. In order to comply with COSPAS-SARSAT frequency allocation requirements, changes to the 406 MHz frequency may occur since the original release of this product.
2) While the original ME406 Series ELTs covered by this manual transmit on 406.028 MHz, current ME406 Series ELTs may not. The product identification label on each ELT specifies the transmitting frequencies of the individual ELT. The 406 MHz component may be 406.028, 406.037 MHz, etc. Allocation of frequencies, based on beacon population per specified frequency band, is controlled by COSPAS-SARSAT.
3) The frequency references throughout this manual for the 406 MHz component should be considered the baseline and the specific frequency indicated on the ELT product label should be substituted if it differs from 406.028 MHz.

TASK 25-62-30-990-805

5. List of Acronyms, Abbreviations, and Definitions

SUBTASK 25-62-30-990-001

Term	Definition
AC	Advisory Circular – A Federal Aviation Administration (USA) bulletin with special information. For the purposes of this document, the acronym AC does not refer to electrical alternating current.
AWG	American Wire Gauge – An electrical wire diameter standard. Look for this acronym in front of or following a wire size number.
BNC Connector	A very common type of coax cable connector having a 50 W impedance and used for RF signal connections.
CAR	Canadian Aviation Regulations – The rules and regulations governing the manufacture, certification, operation, maintenance, and alteration of aircraft in Canada.
CFR	Code of Federal Regulations – The general and permanent rules published in the Federal Register by the executive departments and agencies of the Federal Government. Title 14, "Aeronautics and Space" contains the FARs.
Container	The term "Container", within the context of this document, refers to a device designed to suppress RF signals, such that the broadcast of an ELT placed in the container cannot reach the SAR satellite system.
COSPAS-SARSAT	The international search and rescue consortium that governs the international satellite-based search and rescue distress alert detection and information distribution system. For a complete description go to the official web site for the International COSPAS-SARSAT Program.
D-Sub Connector	D-shaped, subminiature connectors – common type of connector for small signals and electrical currents.
DER	Designated Engineering Representative – An individual qualified and designated by the FAA to approve, or recommend approval, of technical data to the FAA.
Drip Loop	Extra wire length used to form a U-shaped bend in a wire or cable. Water or other fluids will flow down to the bottom of the loop and drip off. Electrical connections are made at the top of the loop.
ELT	Emergency Locator Transmitter – ELTs are installed on aircraft and used to send emergency signals to the SAR satellite system. The word "Beacon" is associated with these devices.
EMI	Electromagnetic Interference – An undesirable disturbance that affects an electrical circuit due to either electromagnetic conduction or electromagnetic radiation emitted from an external source. Also called radio frequency interference or RFI.
Eurocae	European Organization for Civil Aviation Equipment – EUROCAE documents are widely referenced as a means of compliance to European Technical Standard Orders (ETSOs) and other regulatory documents.
FAA	Federal Aviation Administration – The United States government agency for aircraft safety and regulation.
FAR	Federal Aviation Regulations – The rules and regulations governing the manufacture, certification, operation, maintenance, repair, and alteration of aircraft in the United States.
Form 337	FAA Form 337 is required anytime a major repair and/or major alteration is performed on an aircraft. Refer to FAR, Part 43, Appendix A and the definitions of Major Repair/Alteration contained in FAR, Part 1 for guidance.

FSDO	Flight Standards District Office – FAA district offices responsible for aircraft certification, operation, maintenance, and modification issues, approvals and enforcement.
G-Switch	A velocity switch that detects sudden de-acceleration and is used to automatically activate an ELT. May also be referred to as a "crash sensor".
LED	Light Emitting Diode – Semiconductor device that emits light when current is passed through it. Usually used as a status or warning indicator.
MIL	The three-letter acronym that stands for "Military" and proceeds military specifications and standards numbers (e.g., MIL-W-2828 would indicate a wire specification and MIL-STD-2828 would indicate a standard).
P/N	Part Number – Refers to an ACR part number, unless otherwise noted. Part numbers are also indicated with parentheses (e.g., 28X-2828).
Plug	The term "Plug", within the context of this document, refers to the male half of an electrical connector.
Receptacle	The term "Receptacle," within the context of this document, refers to the female half of an electrical connector.
RF	Radio Frequency – The range of electromagnetic radiation that constitutes the radio spectrum and corresponds to the frequency of alternating current electrical signals used to produce and detect radio waves.
RTCA	Radio Technical Commission for Aeronautics – Organization that makes recommendations for airworthiness. Refer to www.rtca.org/aboutrtca.asp for more information.
RTV	A rubbery silicon-based adhesive typically used to prevent vibration problems and water intrusion.
SAR	Search and Rescue
Screen Room	The term "Screen Room", within the context of this document, refers to a room designed to suppress RF signals, such that the broadcast of an ELT placed in the screen room cannot reach the SAR satellite system.
Service Loop	A length of wire or cable, at the connection point, of sufficient length to allow a component to be withdrawn from its mounting position and disconnected from its associated wiring.
Tether	A tether is a cord or similar device that anchors something movable to a stationary point or anchors two items together, such that they cannot become separated beyond the length of the tether.
TSO	Technical Standard Order – A TSO is a minimum performance standard issued by the FAA for specified materials, parts, processes, and appliances used on civil aircraft.
UTC	Coordinated Universal Time – A time standard based on International Atomic Time. UTC is the time system used in aviation and is often associated with Greenwich Mean Time (GMT) and/or "Zulu" time.
VHF	Very High Frequency – The 30 MHz to 300 MHz radio frequency band.
VSWR	Voltage Standing Wave Ratio – Electrical signals will "echo" back on a wire if load impedance is not matched to the impedance of the wire. VSWR is a measurement of the amount of voltage being "echoed," compared to the original signal.

TASK 25-62-30-990-806

6. References

SUBTASK 25-62-30-990-001

A. Regulatory Documents

1) The following regulatory documents are referred to herein. When referring to such documents, it is the manual user's responsibility to ensure they are using the latest revision or release of such documents. To that end, the revision designator of specific document numbers has not been included, with the exception of the RTCA document listing, which reflects the revision level of the documents at the time of TSO testing and certification.
2) Except in the case of a printed manual, reference documents available on-line or source locations are linked to applicable web sites.
3) United States
   a) AC 43-9, "Maintenance Records"
   b) AC 43-210, "Standardized Procedures for Requesting Field Approval of Data, Major Alterations, and Repairs"
   c) AC 43.9-1, "Instructions for Completion of FAA Form 337"
   d) AC 43-13-1, "Acceptable Methods, Techniques, and Practices – Aircraft Inspection and Repair"
   e) AC 43.13-2, "Acceptable Methods, Techniques, and Practices - Aircraft Alterations"
   f) FAR, Part 43, "Maintenance, Preventive Maintenance, Rebuilding, and Alteration"
   g) FAR, Part 91, "General Operating and Flight Rules"
4) Canada
   a) CAR, Part V, "Airworthiness"
   b) CAR, Part VI, "General Operating and Flight Rules"
5) COSPAS-SARSAT
   a) C/S G.005, "Cospas-Sarsat Guidelines on 406 MHz Beacon Coding, Registration and Type Approval"
   b) C/S S.007, "Handbook of Beacon Regulations"
6) RTCA – The following documents are available for purchase at RTCA's Web Site www.rtca.org, or by mail:
   a) DO-160D, "Environmental Conditions and Test Procedures for Airborne Equipment"
   b) DO-178B, "Software Considerations in Airborne Systems and Equipment Certification"
   c) DO-182, "Emergency Locator Transmitter (ELT) Equipment Installation and Performance"
   d) DO-183, "Minimal Operational Performance Standards for Emergency Locator Transmitters - Automatic Fixed-ELT (AF), Automatic Portable-ELT (AP), Automatic Deployable-ELT (AD), Survival-ELT (S) Operating on 121.5 and 243.0 MHz"
   e) DO-204, "Minimal Operational Performance Standards for 406 MHz Emergency Locator Transmitters (ELT)"

SUBTASK 25-62-30-990-002

B. Other Documents

1) The following documents are available on-line at the Artex products web site at www.acrartex.com, or from ACR Electronics upon request.
   a) 570-1000, "ELT Test Set (ETS) Operation Manual"

TASK 25-62-30-870-801

1. Description

SUBTASK 25-62-30-870-001

A. Functional Overview

1) The ELT automatically activates during a crash and transmits the standard sweep tone on 121.5 MHz. Approximately every 50 seconds, for up to 520 milliseconds (long message protocol), the 406 MHz transmitter turns on. During that time, an encoded digital message is sent to the COSPAS-SARSAT Search and Rescue (SAR) satellite system.
2) The information contained in the message includes:
    a) Serial number assigned to the ELT by the beacon manufacturer or the national beacon registration authority, or
    b) Aircraft identification or registration number, and
    c) Country of registration and country code; plus
    d) Position coordinates, when coupled with a navigation interface device, which receives position data from the aircraft navigation system and transmits it to the ELT.
3) The 406 MHz transmitter will operate for 24 hours and then shuts down automatically. The 121.5 MHz transmitter will continue to operate until the batteries are exhausted, which is at least 50 hours.
4) The 406 MHz transmitter produces a much more accurate position, typically 3 kilometers as compared with 15 to 20 kilometers for 121.5 MHz transmitters. When coupled to the aircraft navigation system via a navigation interface, the accuracy improves to approximately 100 meters.
5) The ELT transmits a digital message that allows search and rescue authorities to contact the owner/operator of the aircraft through information contained in a database. Information contained in the database includes:
    a) Type of aircraft and aircraft registration number,
    b) Owner address and telephone number, and
    c) Alternate emergency contact.
6) After the ELT is activated and the 406 MHz signal is detected by the SAR satellite system and a position is calculated, the 121.5 MHz transmissions are used to home in on the crash site.

    NOTE: Effective February 1, 2009, COSPAS-SARSAT has terminated satellite processing of distress signals from 121.5 MHz beacons.
7) Aircraft communications transceivers are not capable of receiving 406 MHz transmissions; therefore, the only methods of monitoring the ELT are:
    a) The blinking cockpit remote switch LED,
    b) The buzzer, or
    c) 121.5 MHz transmissions, which can be monitored using the aircraft communications transceiver or an AM radio tuned to 121.5 MHz.

SUBTASK 25-62-30-870-002

B. Components

1) The ME406 Series ELT main assembly is housed in a high impact, fire resistant, polycarbonate plastic case and mounted in a tray made of similar material. See Figure 2 ME406 Series ELT and Mounting Tray Assembly.

   NOTE: The ELT main assembly and its mounting frame assembly are capable of withstanding extremely harsh environments and have been subjected to the rigorous environmental testing required by COSPAS-SARSAT for certification.

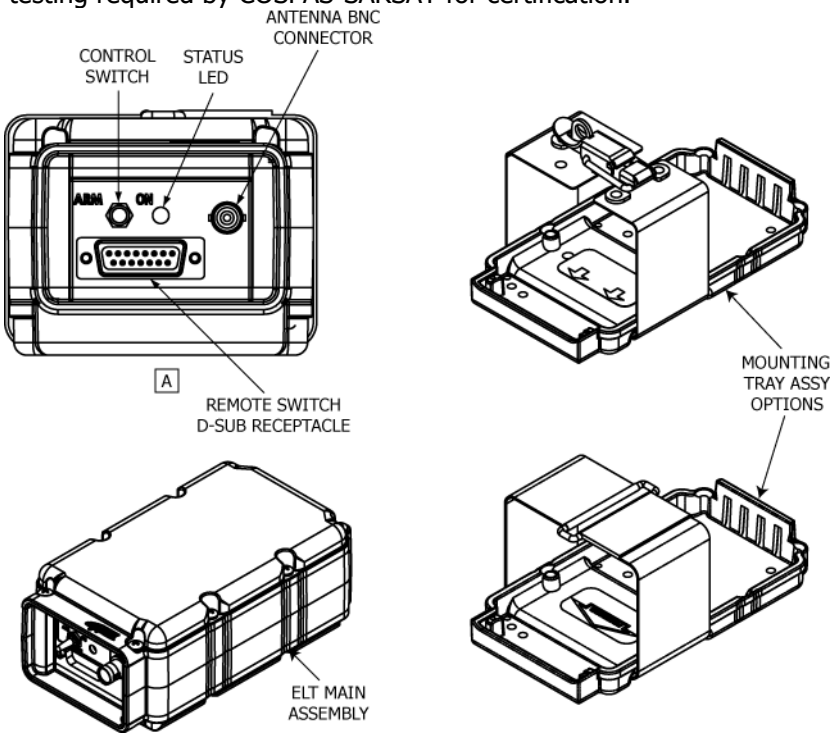

Figure 2 ME406 Series ELT and Mounting Tray Assembly

2) The cockpit-mounted remote switch assembly is comprised of an ELT status LED and control switch, and allows an operator to manually turn the ELT on (i.e., activate) for testing and reset (i.e., deactivate) the ELT. See Figure 3 Remote Switch Front View.

   NOTE: The ELT CANNOT be disarmed or disabled from the cockpit. Cockpit operation is limited to deactivating or manually activating the ELT.

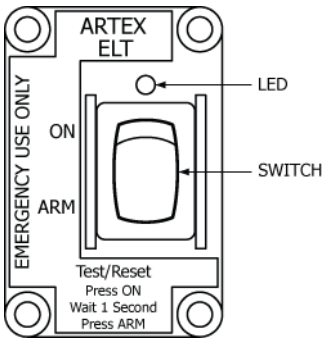

Figure 3 Remote Switch Front View

3) The buzzer (i.e., horn) provides an audible alert when the ELT is active. See Figure 4 Buzzer.

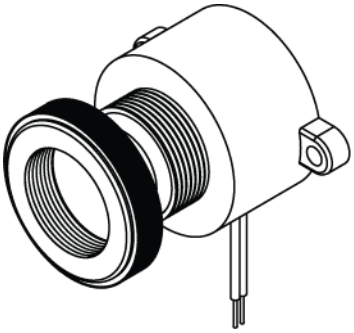

Figure 4 Buzzer

4) The battery pack for the ME406 Series ELT consists of two "D" size lithium manganese dioxide cells connected in series. To prevent the cells from being charged, diodes and fuses are connected to the inline power from each cell. The fuses also protect from high output. See Figure 5 Battery Pack Assembly.

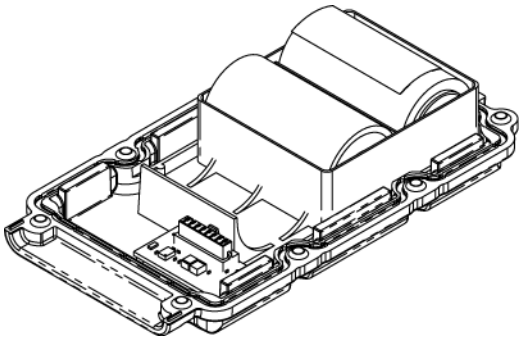

Figure 5 Battery Pack Assembly

5) Two antennas are approved for use with the ME406 Series ELT. Selection of the proper antenna is dependent upon end use, aircraft configuration and speed, and other factors. See Figure 6 Antennas.

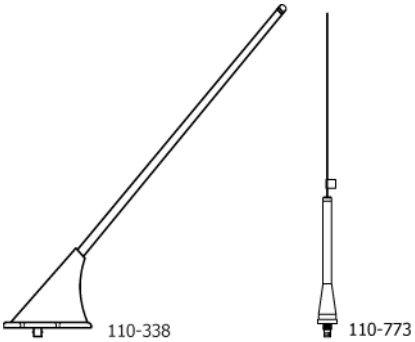

Figure 6 Antennas

TASK 25-62-30-870-802

2. Operation

SUBTASK 25-62-30-870-001

A. Operational Overview

1) See Figure 7 ELT Operational Flow Diagram.

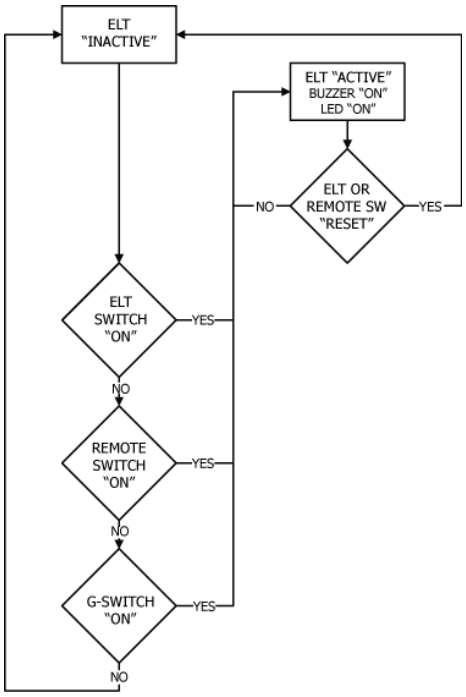

Figure 7 ELT Operational Flow Diagram

2) A primary feature of the ME406 Series ELT is its simplicity of operation. As long as the ELT is connected to the remote switch harness ELT connector, such that pins 5 and 12 are jumpered (G-switch loop), it will activate in the event of a crash.

   NOTE: Neither the cockpit remote switch or the ELT local switch can be positioned in such a manner as to prevent automatic activation when the ELT is connected properly.

3) ELT operation is designed to prevent human error and misuse in regards to automatic activation. The ELT cannot be activated by dropping, rough handling or during shipping.
4) When the ELT is activated, the presence of the emergency sweep tone and the flashing cockpit remote switch panel LED indicates an active, normal functioning ELT. The cockpit panel LED must immediately begin to flash continuously upon ELT activation.
5) The ELT is considered to be either "ACTIVE" or "INACTIVE". When "INACTIVE", the ELT is in a state of rest and performs no functions. Taking the ELT from the "INACTIVE" state to the "ACTIVE" state requires a positive switch transition from either the cockpit remote switch, ELT local switch, or G-switch.
   a) It is possible the primary G-switch or one of the auxiliary G-switches could activate the ELT in either a fixed or rotor wing aircraft as the result of severe maneuvers or a very hard landing.
   b) To take the ELT from an "ACTIVE" state back to an "INACTIVE" state, a reset must occur. See SUBTASK 25-62-30-870-004 on page 22.
6) A warning buzzer is required under C126 TSO approval. The buzzer is powered by the ELT and therefore not dependent upon the aircraft battery for operation. It is not designed to operate

continuously, but sounds at predetermined intervals and runs for shorter periods toward the end of ELT battery life.

SUBTASK 25-62-30-870-002

B. Normal Operation

1) The cockpit remote switch is in the "ARM" position (i.e., down).
2) The local switch on the ELT is in the "ARM" position (i.e., down).

SUBTASK 25-62-30-870-003

C. Manual Activation

1) The ELT may be manually activated by placing either the remote switch or the ELT local switch in the "ON" position.

   NOTE: As long as the cockpit remote switch and the ELT local switch are in the ARM (off) positions respectively, the ELT will automatically activate on impact.

SUBTASK 25-62-30-870-004

D. ELT Reset

1) If the ELT is activated accidently, it will need to be reset.
2) Reset the ELT from the cockpit by moving the remote switch to the "ON" position, waiting approximately one second, and then moving it back to the "ARM" position. If the switch is already in the "ON" position, move it to the "ARM" position.
3) Reset the ELT locally by moving the switch on the ELT to the "ON" position, waiting approximately one second, and then moving it back to the "ARM" position. If the switch is already in the "ON" position, move it to the "ARM" position.

   NOTE: The ELT cannot be reset if either the cockpit remote switch or the ELT local switch is in the "ON" position.

SUBTASK 25-62-30-750-001

E. Functional Check

1) A monthly functional check is recommended to verify operational status of the ELT.
2) Perform this functional check in accordance with SUBTASK 25-62-30-750-012 on page 35.

TASK 25-62-30-870-803

3. Specifications

SUBTASK 25-62-30-870-001

A. Environmental and Physical

1) Table 2 lists the environmental and physical specifications of the ME406 Series ELT.

NOTE: For automatic activation, the higher threshold of 4.5 ft/sec (2.3 *g*) is specified in accordance with Eurocae ED-62. Use of the higher threshold crash sensor has been approved by the FAA as a deviation to TSO C126 (FAA Reference #98-130S-108, February 6, 1998).

CRITERIA	PARAMETER	CHARACTERISTIC
Temperature	Storage	-55° C to +85° C
	Operating	-20° C to +55° C
Mechanical	Vibration	10 *g*, 5 Hz to 2,000 Hz
	Shock	500 *g* for 4 ms
	Crashworthiness	100 *g* for 23 ms
	Humidity	95% for 50 hours
	Penetration	55 lbs from 6 in. (25 kg from 15 cm)
	Crush	1,000 lbs (454 kg)
	Altitude	55,000 ft (16,764 m)
Automatic Activation	ME406 Series (Primary G-Switch)	4.5 ±0.5 ft/sec (2.3 *g*)
	ME406HM (Auxiliary Five G-Switches)	12 *g*
Weight	ELT Complete w/Battery Pack, and Mounting Tray	1.95 lbs (0.8 kg)
Dimensions (L x W x H)	ELT Complete w/Battery Pack, and Mounting Tray	6.60 x 3.69 x 2.86 in. (168 x 94 x 73 mm)
Software	In accordance with RTCA/DO-178B, Level D	

Table 2 Environmental and Physical Specifications

B. Electrical

1) Table 3 lists the electrical specifications of the ME406 Series ELT.

CRITERIA	PARAMETER	CHARACTERISTIC
Operating Frequencies	406.028 MHz, or higher	± 1 KHz
	121.5 MHz	± 6.075 kHz
Modulation	406 MHz	Bi-Phase L (G1D)
	121.5 MHz	Amplitude Modulation (A3X)
Transmitter Duty Cycle	406 MHz	440 ms (± 1%), or 520 ms (± 1%), every 50 seconds (± 5%)
	121.5 MHz	Continuous
Peak Effective Radiated Power (PERP)	406 MHz	3.2 W to 7.2 W (37 dBm ± 2 dBm) PERP or EIRP for 24 hrs @ -20° C to +55° C
	121.5 MHz	Min. 50 mW (17 dBm) PERP for 50 hrs @ -20° C to +55° C or 100 mW EIRP (20 dBm) for 48 hrs @ -20° C to +55° C
Occupied Bandwidth	406 MHz	20 KHz max.
	121.5 MHz	25 KHz max.
Spurious Emissions	406 MHz	Per RTCA/DO-204
	121.5 MHz	Per CFR Title 47 (FCC), Part 87
Battery	Type of Cell	Lithium Manganese Dioxide
	Voltage	6.0
	Amp-Hour Rating	11.1

Table 3 Electrical Specifications

C. Antennas

1) Table 4 lists the specifications of the antennas approved for use with the ME406 Series ELT.

PARAMETERS	CHARACTERISTIC	
	110-338	**110-773**
Style	Rod	Whip
Frequencies	121.5, 406 MHz	
VSWR	121.5 MHz - 2.0:1 Max. 406 MHz - 1.5:1 Max.	
Polarization	Vertical Monopole	
Radiation Pattern	Omnidirectional	
Impedance (ohms)	50 Nominal	
Weight	0.45 lbs (0.20 kg)	0.18 lbs (0.54 kg)
Drag	2.90 lbs (1.3 kg) @ 350 KTS, 25,000 ft	0.66 lbs (0.3 kg) @ 600 KTS, 30,000 ft
Coax Cable	RG-142	
Connectors	BNC Female	
Dimensions (Base-to-Tip)	15.50 in. (39.4 cm)	15.00 in. (38.1 cm)

Table 4 Antenna Specifications

TASK 25-62-30-750-801

1. Inspection and Test Regulatory Requirements

SUBTASK 25-62-30-990-001

A. United States

1) In accordance with FAR Part 91, Subpart C, § 91.207 (d), the ELT must be inspected within 12 calendar months after the last inspection for:
    a) Proper installation;
    b) Battery corrosion;
    c) Operation of controls and crash sensor; and
    d) The presence of a sufficient signal radiated from its antenna.
2) All maintenance shall be performed in accordance with FAR Part 43, Appendix D, which requires the following inspections at each annual or 100-hour inspection:
    a) ELT and mount for improper installation (see Figure 26 Velcro Strap Installation & Inspection on page 62);
    b) Wiring and conduits for improper routing, insecure mounting, and obvious defects;
    c) Bonding and shielding for improper installation and poor condition; and
    d) Antenna, including trailing antenna, for poor condition, insecure mounting, and improper operation.

SUBTASK 25-62-30-990-002

B. Canada

1) CAR Part VI, Standard 625, Appendix C, requires the ELT to be inspected at intervals not exceeding 12 months.
2) All maintenance and testing shall be performed in accordance with the requirements of CAR Part V, Standard 571, Appendix G, which requires:
    a) Corrosion inspection;
    b) Operational testing;
    c) Performance testing, including:
        1. Measured peak power after 3 minutes of operation,
        2. Measured frequency after 3 minutes of operation,
        3. Audio modulation, which shall be recognizable as a typical ELT signal,
        4. Measured current draw in the "ARM" (off) and in the "ON" position, as specified by the manufacturer, and
        5. The automatic activation system.

SUBTASK 25-62-30-990-003

C. Other Countries

1) For all other countries, maintenance and testing shall be conducted in accordance with the requirements of applicable national regulatory authorities and the requirements herein, as applicable. Local regulations and requirements shall take precedence.

2) In the absence of any inspection requirements from national regulatory authorities, operators should follow the annual inspection procedures outlined in Inspection and Test Regulatory Requirements, subsection United States on page 26.

TASK 25-62-30-750-802

2. Inspection and Test Procedures

SUBTASK 25-62-30-990-001

A. Checklist

1) Table 5 provides a list of the ELT inspection and testing requirements, a copy of which may be used as a checklist to verify inspection and test completion. The item numbers in the table correspond to the item identifiers for each task.

NOTE: Items 5a through 5h are mandatory requirements only in Canada, in addition to meeting the other inspection and test requirements listed in Table 5.

ITEM NO.	DESCRIPTION	BY
1	Coax Cable and Wiring Connections Inspection	
2	ELT Mounting Tray and Hardware Inspection	
3	ELT Battery Pack Inspection	
4a	G-Switch Functional Check	
4b	G-Switch Functional Check (Helicopter Models Only)	
5a	121.5 MHz Frequency Measurement	
5b	Audio Modulation Check	
5c	121.5 MHz Power Output Measurement	
5d	406 MHz Frequency Measurement	
5e	406 MHz Power Output Measurement	
5f	Current Draw Test	
5g	Digital Message Verification	
5h	ELT Reset Check	
6	Installed Transmitter Test	
7	Antenna Test	
8	Inspection and Test Documentation	

Table 5 ELT Inspection and Test Checklist

SUBTASK 25-62-30-000-001

B. Preparation

1) Remove the ELT in accordance with SUBTASK 25-62-30-010-001 on page 40.
2) Remove the battery pack in accordance with SUBTASK 25-62-30-050-001 on page 42.

SUBTASK 25-62-30-220-001

C. Coax Cable and Wiring Connections Inspection – Item 1

1) Check remote switch harness connector for corrosion bent or broken pins and other damage.
2) Check antenna coax cable connectors for corrosion, bent or broken center conductor, and other damage.

   NOTE: Pay special attention to the center conductor, which is prone to retracting into the connector housing.

SUBTASK 25-62-30-220-002

D. Mounting Tray and Hardware Inspection – Item 2

1) Inspect mounting tray for cleanliness, cracks, and other damage.
2) Check mounting tray hardware for corrosion and security.
3) Inspect Velcro strap in accordance with SUBTASK 25-62-30-410-001 on page 61 and replace with metal strap mounting tray assembly (Artex P/N 452-3034-1) if worn.
4) Velcro strap must be replaced with metal strap mounting tray assembly (Artex P/N 452-3034-1) under any circumstances requiring a battery replacement. These circumstances are detailed in SUBTASK 25-62-30-220-003.

   NOTE: FAA TSO C126b states that the use of hook and loop fasteners is no longer an acceptable means of attachment for new installations in complying with the Crash Safety requirements of section 2.2.5 of RTCA/DO-204A for automatic fixed (AF) and automatic portable (AP) ELTs.

SUBTASK 25-62-30-220-003

E. Battery Pack Inspection – Item 3

CAUTION: THE BATTERY PACK CONTAINS ELECTROSTATIC DISCHARGE SENSITIVE (ESD) COMPONENTS AND, AS SUCH, IT MUST BE HANDLED WITH CARE. IF POSSIBLE, WEAR A GROUNDED WRIST STRAP WHEN HANDLING THE BATTERY PACK DURING INSPECTION AND MAINTENANCE ACTIVITIES. TAKE PARTICULAR CARE TO AVOID TOUCHING THE EXPOSED CIRCUIT BOARD AND CONNECTOR PINS ON THE BOARD.

CAUTION: DO NOT USE CONTACT CLEANER ON ELT COMPONENTS. SUCH CHEMICAL AGENTS CAN BE HIGHLY DESTRUCTIVE TO THE MOUNTING HARDWARE AND ELT HOUSING, CAUSING CRACKING, FRACTURING AND OTHER DAMAGE.

1) Check battery cells, components, and connectors for corrosion and other damage.
2) Check wiring for breaks, damaged insulation, and improper or damaged connections.
3) Check housing for cracks and other visual damage.
4) Remove any corrosion residue from the underside of the ELT.
5) Check the battery pack expiration date.
6) Replace the battery pack if any of the following conditions are true:
   a) After use in an emergency;
   b) After an inadvertent activation of unknown duration;

c) When the total of all known transmissions exceeds one hour; or

d) On or before battery replacement (expiration) date.

SUBTASK 25-62-30-750-001

F. G-Switch Functional Check – Item 4a

CAUTION: A JUMPER IS REQUIRED TO PERFORM THIS CHECK. DUE TO THE POTENTIAL OF PHYSICAL DAMAGE IF THE JUMPER IS IMPROPERLY INSTALLED, THIS STEP SHOULD ONLY BE PERFORMED BY AN EXPERIENCED TECHNICIAN/MECHANIC.

1) Reinstall the battery in accordance with SUBTASK 25-62-30-450-001 on page 63.

   NOTE: If tests 5a through 5h are going to be performed, the battery may be temporarily installed with only two screws, located on a diagonal from each other.

2) Perform this functional check within the first 5 minutes after the hour (UTC), as required by AC 43.13-1, Chapter 12, § 12-22, Note 3.

3) Notify any nearby control tower of your intentions.

4) Install the 500-0079 ME406 G-Switch Loop Test Connector Fixture on the ELT receptacle or jumper ELT receptacle pins 5 and 12.

   NOTE: The ELT cannot be activated using this procedure unless pins 5 and 12 on the ELT receptacle are jumpered. See Figure 21 Metal Airframe Wiring Diagrams on page 55.

5) Verify the ELT switch is in the "ARM" position.

6) Monitor 121.5 MHz on an AM receiver.

7) Activate the ELT by using a rapid forward (i.e., throwing) motion in the direction of the arrow on the ELT label, followed by a rapid reversing action.

8) Verify activation by listening for the aural sweep tone on the receiver.

9) Reset the ELT by toggling the control switch to the "ON" position and then back to the "ARM" position.

SUBTASK 25-62-30-750-002

G. G-Switch Functional Check (Helicopter Models Only)– Item 4b

1) This procedure outlines the steps required to test the five-axis G-switch installed in ARTEX Helicopter Model (HM) ELTs.

2) Testing of the primary and five axis G-switch can be accomplished by simulating a rapid deceleration in the required direction of the G-switch. Although the "football throw" test as outlined in item 4a is sufficient to test the forward G-switch, a sturdy padded surface, such as a padded chair or foam-covered workbench, is required to simulate the G-force required to trigger the remaining axes. The padding of the surface is required to prevent damage to the ELT.

   NOTE: The fixed wing G-switch is triggered by approximately 2.3 Gs of deceleration (axis +X in Figure 8), whereas the five-axis G-switch is triggered by 12.5 Gs of deceleration (axes -X, -Y, +Y, -Z, and +Z in Figure 8), and requires a significant force to activate. The higher G-rating precludes inadvertent activation in helicopter applications but will allow for activation during a mishap.

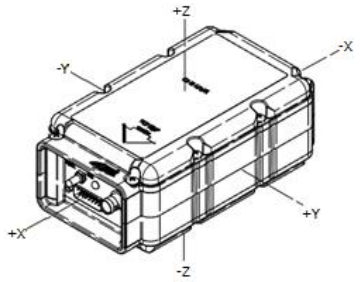

Figure 8 ELT Orthogonal Axes

3) Keep G-switch loop and 50-ohm load installed on the antenna port from Item 4a installed.
4) Utilizing the sturdy padded surface, hold the ELT 10 inches (26.1 Centimeters) above the test area and thrust down forcefully maintaining a level axis into the pad to test the -X axis (see Figure 8).
5) Repeat step 2 for the -Y, +Y, -Z, and +Z axes (see Figure 8).
6) Verify in each case that the ELT activates via G-switch trigger as indicated by the flashing LED. An auxiliary receiver set to 121.5 MHz should be used to detect the ELT signal.
7) Reset the ELT after each activation by toggling the ON/OFF switch to ON and then to OFF to reset the ELT.

SUBTASK 25-62-30-750-003

H. Performance Testing Setup

NOTE: The ELT software routine logs battery life in 30-second increments. A minimum of 30 seconds is added to the battery usage total each time the ELT is activated and de-activated. If the ELT is left activated beyond the first 30 seconds, additional time is added in 30-second increments.

NOTE: Careful planning of the performance tests is necessary to avoid activating the ELT more than necessary. Plan the performance testing in a manner that allows tests to be run concurrently and test equipment settings to be quickly switched from one test to another. By doing so, the three-minute warm-up requirement can be eliminated from a number of tests and battery run time minimized to a large extent.

1) Place the ELT in a container or screen room capable of substantially attenuating RF signals, or the transmitter power output shall be connected to a suitable dummy load to minimize radiation.
2) Use the ELT's own battery pack as the power source for these measurements. An alternate power source can be used where lengthy servicing, other than the performance tests, is anticipated.
3) Ensure that adequate attenuation rated for 406 MHz is installed between the ELT antenna output and the measurement equipment to prevent damaging input circuitry, if required. At a minimum, the attenuator should be rated at 30 dB and 5 watts for a ½-second duration as shown in Figure 9 Performance Testing Equipment Setup.

Figure 9 Performance Testing Equipment Setup

SUBTASK 25-62-30-750-004

I. 121.5 MHz Frequency Measurement – Item 5a

1) Connect the measuring device, referring to SUBTASK 25-62-30-750-003 on page 30.
2) Activate the ELT by placing the control switch in the "ON" position.
3) Wait three minutes.
4) Perform SUBTASK 25-62-30-750-005 during the three-minute waiting period.
5) Measure the frequency after the three-minute waiting period. The frequency must be within the tolerance specified in Table 3 on page 24.

SUBTASK 25-62-30-750-005

J. Audio Modulation Check – Item 5b

1) Perform this check in conjunction with SUBTASK 25-62-30-750-004.
2) Monitor 121.5 MHz on an AM receiver.
3) Listen for the aural sweep tone on the receiver. The audio should "sound" like an ELT.

SUBTASK 25-62-30-750-006

K. 121.5 MHz Power Output Measurement – Item 5c

1) Connect the measuring device, referring to SUBTASK 25-62-30-750-003 on page 30.
2) Activate the ELT, if necessary, by placing the control switch in the "ON" position.
3) Wait three minutes.
4) Read the displayed amplitude for 121.5 MHz. The amplitude must be within the minimum specified for 121.5 MHz in Table 3 on page 24 at the terminal output.

SUBTASK 25-62-30-750-007

L. 406 MHz Frequency Measurement – Item 5d

CAUTION: POWER OUTPUT IS APPROXIMATELY 37 DB (5 WATTS). BE SURE ADEQUATE ATTENUATION IS INSERTED IN-LINE BETWEEN THE ELT ANTENNA OUTPUT AND THE MEASURING DEVICE TO PROTECT THE INPUT CIRCUITS OF THE MEASURING DEVICE.

1) Connect the measuring device, referring to SUBTASK 25-62-30-750-003 on page 30.
2) Activate the ELT, if necessary, by placing the control switch in the "ON" position.
3) Wait three minutes.
4) Measure the frequency. Measure the frequency after the three-minute waiting period. The frequency must be within the tolerance specified in Table 3 on page 24.

NOTE: The exact 406 MHz frequency used is printed on the ELT product label.

SUBTASK 25-62-30-750-008

M. 406 MHz Power Output Measurement – Item 5e

CAUTION: POWER OUTPUT IS APPROXIMATELY 37 DB (5 WATTS). BE SURE ADEQUATE ATTENUATION IS INSERTED IN-LINE BETWEEN THE ELT ANTENNA OUTPUT AND THE MEASURING DEVICE TO PROTECT THE INPUT CIRCUITS OF THE MEASURING DEVICE.

1) Connect the measuring device, referring to SUBTASK 25-62-30-750-003 on page 30.
2) Activate the ELT, if necessary, by placing the control switch in the "ON" position.
3) Wait three minutes.
4) Read the displayed amplitude of the 406 MHz burst that follows the three-minute wait period. The amplitude must be within the minimum specified for 406 MHz in Table 3 on page 24, at the output terminal.
5) Deactivate the ELT by placing the control switch in the "ARM" position.

SUBTASK 25-62-30-750-009

N. Current Draw Test – Item 5f

CAUTION: EXERCISE EXTREME CAUTION TO AVOID CAUSING A SHORT CIRCUIT CONDITION, WHICH WILL BLOW THE FUSES IN THE BATTERY PACK. THIS TEST SHOULD ONLY BE PERFORMED BY AN EXPERIENCED TECHNICIAN/MECHANIC.

CAUTION: ALL "ON" STATE CURRENT MEASUREMENTS MUST BE MADE WITH THE RF OUTPUT (I.E., ELT ANTENNA CONNECTOR) LOADED WITH 50 OHMS RATED FOR 5 WATTS. EITHER A RESISTIVE LOAD OR EQUIPMENT WITH 50 OHM IMPEDANCE PADDED WITH A 10 DB/5 WATT ATTENUATOR. REFER TO SUBTASK 25-62-30-750-003 ON PAGE 30.

CAUTION: ACR ELECTRONICS DOES NOT RECOMMEND MEASURING THE 406 MHZ BURST, WHICH DRAWS UP TO 5 AMPS OF CURRENT; HOWEVER, THE AMMETER USED TO MEASURE THE STEADY STATE CURRENT OF THE 121.5 MHZ TRANSMISSION MUST BE CAPABLE OF WITHSTANDING A 5 AMP CURRENT DRAW OR MUST HAVE THE READING SCALE ADJUSTED ACCORDINGLY. KEEP IN MIND THE ELT TRANSMITS A 406 MHZ BURST WHEN THE ELT IS RESET, IN ADDITION TO A 406 MHZ BURST APPROXIMATELY EVERY 50 SECONDS.

1) Verify the ELT control switch is in the "ARM" position.
2) Separate the battery pack from the ELT. See SUBTASK 25-62-30-050-001on page 42.
3) Install test fixture 500-0057 in the power circuit. See Figure 10 Current Draw Test Setup.

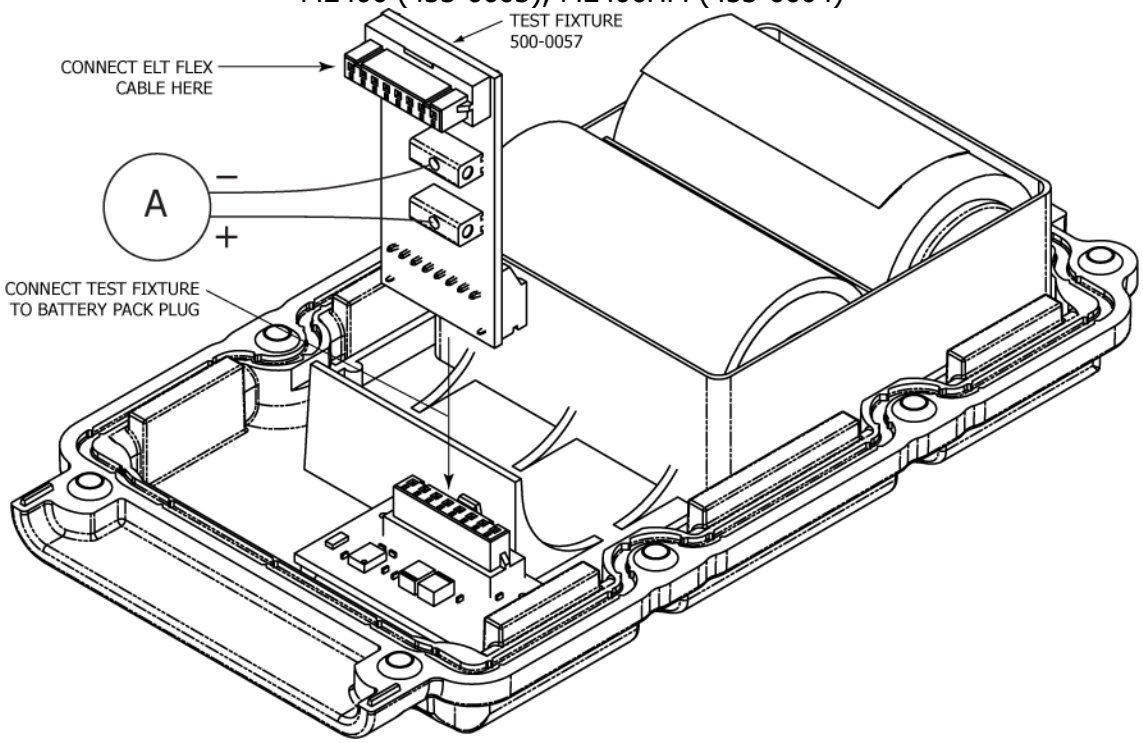

Figure 10 Current Draw Test Setup

4) Connect the ammeter and set it for the lowest possible scale.
5) Read the current draw on the ammeter. Measured current must not exceed 2 µA (micro-amps).
6) Set the ammeter range to accommodate at least 5 A.
7) Activate the ELT by placing the control switch in the "ON" position.
8) Allow the ELT to transmit a 406 MHz burst, which occurs about 50 seconds after activation.
    a) Read the 406 burst current draw. The 406MHz burst will draw approximately 3A to 4A. Burst current should not exceed 5A.
9) Adjust the ammeter to a scale appropriate for reading less than 200 mA.
10) Read the steady state current draw on the ammeter, which must not exceed 95 mA.
11) Disconnect the ammeter before the next 406 MHz burst.
12) Deactivate the ELT by placing the control switch in the "ARM" position.
13) Remove the test fixture and reinstall the battery pack in accordance with SUBTASK 25-62-30-450-001 on page 63.

O. Digital Message Verification – Item 5g

1) Set the 453-1000 ELT Test Set (ETS) beacon reader to receive and decode the ELT digital message. Refer to the ETS operating manual (570-1000) for ETS operating instructions and additional details.

   NOTE: A beacon reader equivalent to the ETS may be used, provided it is capable of receiving and decoding the 406 MHz digital message. Examples of equivalent beacon readers include the IFR-4000, BT100A, and other models available. Consult documentation for the beacon tester in question and contact Artex Technical Support for further information.

   NOTE: The SARTECH 453-0131 ELT Tester is no longer supported and cannot properly read the latest generation of 406MHz ELTs.

2) Activate the ELT by placing the control switch in the "ON" position.
3) Allow the ELT to transmit for approximately 5 seconds.
4) Deactivate the ELT and read the test message broadcast at "turn-off". A sample message is shown in Figure 11 406 MHz Message Example on page 34.
   a) The test message broadcast by the ELT at "turn-off" contains all the information in an actual distress message, except there is a special digital prefix that informs COSPAS-SARSAT satellites to ignore the message.
   b) The example in Figure 11 406 MHz Message Example on page 34 is an ELT programmed for "User Protocol ELT with Serial Number", with a test Hex ID.
   c) Actual messages will vary depending on the protocol and information programmed into the ELT.
5) Repeat the activation and deactivation cycle if the ETS fails to read the message on the initial try. The 406 MHz oscillator may not be warmed up. If continued attempts to read the message fail, check for self-test error codes and refer to Table 6 on page 38.

Figure 11 406 MHz Message Example

SUBTASK 25-62-30-750-011

P. ELT Reset Check – Item 5h

1) Place the ELT control switch in the "ON" position.
2) Return the switch to the "ARM" position.
3) If the ELT is working properly, the LED will stay on for approximately 1 second and then turn off. If a series of flashes are displayed, refer to Table 6 on page 38.

   NOTE: A 5-flash error indication will occur if the ELT is programmed with a location protocol, since no navigation input data is present.

SUBTASK 25-62-30-750-012

Q. Installed Transmitter Test – Item 6

CAUTION: DO NOT ALLOW THE DURATION OF THIS TEST TO EXCEED 5 SECONDS. THE ELT WILL TRANSMIT A 406 MHZ SIGNAL AFTER THE ELT IS ACTIVATED FOR APPROXIMATELY 47 SECONDS. THE COSPAS-SARSAT SATELLITE SYSTEM WILL CONSIDER THE 406 MHZ TRANSMISSION TO BE A VALID DISTRESS SIGNAL.

1) Reinstall the ELT in accordance with SUBTASK 25-62-30-410-001 on page 61.
2) If required by local aviation regulations, perform the following functional check within the first 5 minutes after the hour (UTC).
3) Notify any nearby control tower of your intentions.
4) Tune a receiver, usually the aircraft transceiver, to 121.5 MHz.

   NOTE: An AM radio may be used to receive the signal.

5) Activate the ELT by placing the cockpit remote switch in the "ON" position. The LED will begin flashing continuously.
6) Listen for 3 audible sweeps on the receiver, which takes about 1 second.
7) Verify the buzzer sounds immediately upon activation.
8) Return the cockpit remote switch to the "ARM" (off) position while paying close attention to LED activity when the ELT enters the "ARM" condition. If the ELT is working properly, the LED will stay on for approximately 1 second and then turn off.

   NOTE: This test also completes the requirement to check ELT controls by verifying operation of the remote switch.

9) Refer to Table 6 on page 38 if the LED displays a series of error code flashes.

SUBTASK 25-62-30-750-013

R. Antenna Test – Item 7

CAUTION: DO NOT ALLOW THE DURATION OF THIS TEST TO EXCEED 5 SECONDS.

1) Tune a low quality AM receiver (i.e., radio) to 121.5 MHz.

   NOTE: The aircraft transceiver is not recommended for this test, because it is too sensitive to verify the integrity of the antenna system and it may pick up a weak signal even if the antenna is disconnected from the ELT. An AM radio provides a better level of confidence for this test.

2) Place the radio approximately six inches from the antenna.
3) Activate the ELT by placing the cockpit remote switch in the "ON" position.

   NOTE: Perform this test within the first five minutes after the hour UTC.

4) Listen for 3 audible sweeps on the radio, which takes about 1 second. An audible signal verifies energy is being transmitted by the antenna.
5) Reset the ELT by placing the cockpit remote switch in the "ARM" position.

   NOTE: The ELT contains an internal self-test function that executes upon deactivation of the ELT. This self-test function is designed to test the integrity and radiated power of the ELT, coax cable, and antenna. If no LED error codes are displayed after deactivation of the ELT, it is in compliance with FAR Section 91.207 subsection d paragraph (4).

SUBTASK 25-62-30-750-014

S. Inspection and Test Documentation – Item 8

1) Make an appropriate entry in the aircraft maintenance records (i.e., logbook), including the date the ELT inspection and testing was satisfactorily completed.
2) In addition to the requirements of Step 1, for aircraft operating under Canadian authority and following satisfactory completion of performance testing, the date on which the test was performed shall be marked on the ELT external casing in a legible and permanent manner.

TASK 25-62-30-810-801

3. Fault Isolation

SUBTASK 25-62-30-810-001

A. Self-Test Error Troubleshooting Guidelines

1) Table 6 on page 38 describes the ELT self-test LED error codes (i.e., flash codes), their probable causes, and possible solutions. The 5-flash error is not present when the ELT is programmed with a serial user protocol (short message).

   NOTE: Upon activation, the LED may display a long single flash depending on software version, which does not indicate a malfunction. Any self-test error codes will display following this initial flash, if applicable. If there are multiple errors, there is a 0.5 to 1.0 second pause between each error code.

CODE	PROBABLE CAUSE	POSSIBLE SOLUTION
3-Flash	Indicates a 406 MHz transmission problem	
	Open or short condition on antenna output or coax cable	Verify the coax cable/antenna is connected and in good condition Perform continuity check of center conductor and shield Check for a shorted cable
		Check for intermittent connection in the coax cable
	Antenna or installation faulty	Check with a VSWR meter. Check antenna for opens, shorts, or a resistive ground plane connection
	Impedance presented by antenna	Lengthen or shorten antenna coax cable length by 4 to 6 inches
	Insufficient ground plane	Provide ground plane at least 12 inches in diameter
	Upright metal structure obstructing antenna causing re-radiation	Stay at least 10-12 inches away from upright metal structures
	Low power output	Battery low
		3A fuse on battery pack circuit board faulty
	ELT local ground not connected	Verify continuity between antenna ground plane and ELT local ground connection.
	Transmitter module faulty	Cannot be repaired in field - Return to factory for servicing
4-Flash	Indicates 406 or 121.5 MHz output power is low	
	Open or short condition on antenna output or coax cable	Check coax cable and connections
		Check antenna for proper installation
	Impedance presented by antenna	Lengthen or shorten antenna coax cable length by 4 to 6 inches
	Transmitter module faulty (frequency out of limits)	Cannot be repaired in field - Return to factory for servicing

5-Flash	Indicates there is no navigation position data present (long message protocol only)	
	ELT programmed with a long message format	Reprogram to short message or ignore error code. 5 flash code does not indicate a hard failure and does not affect airworthiness of unit.
6-Flash	Indicates G-Switch loop between pins 5 and 12 is not present	
	Jumper open	Verify D-Sub connector jumper is installed by checking for less than 1Ω between pins 5 and 12. Repair as necessary.
	Jumper missing	Install D-Sub jumper between pins 5 and 12 in D-Sub connector.
7-Flash	Indicates a battery problem	
	Operating time is >1 hour	Replace battery pack
	Electrical circuits faulty	

Table 6 ELT Self-Test Error Codes Troubleshooting Guide

SUBTASK 25-62-30-810-002

B. ELT Troubleshooting Guidelines

1) Table 7 provides ELT troubleshooting guidelines for installation and operational issues.

SYMPTOM	PROBABLE CAUSE	POSSIBLE SOLUTION
Remote switch LED always on (steady)	Improper wiring	Verify wiring
	Short circuit	Check for frayed insulation
		Verify LIGHT_ON wire. Check continuity between pin 2 and pin 9 on remote switch harness connector with ELT disconnected from harness. If short to ground is present, correct wiring short and reinstall remote switch.
	Remote Switch Faulty	Replace Remote Switch
	ELT Faulty	Disconnect remote switch from harness. Check continuity between pin 2 and pin 9 on remote switch harness connector with ELT connected to harness. If short to ground is present with ELT deactivated, return ELT to an Artex authorized repair facility.
ELT will not turn off	Battery too low to support 406 burst and causes circuit to reset	Remove battery pack to disable ELT and replace battery pack
	Turn off ELT using local switch - If ELT turns off:	
	Defective remote switch harness reset circuit wiring	Check wiring continuity and repair as necessary
	Defective remote switch	Replace remote switch
	If ELT does not turn off using local switch:	
	ELT defective	Remove battery pack to disable ELT and return ELT to factory for servicing

Table 7 ELT Troubleshooting Guide

REMOVAL

TASK 25-62-30-010-801

1. ELT

SUBTASK 25-62-30-010-001

A. ELT Removal

1) See Figure 12 ELT Removal Sequence.

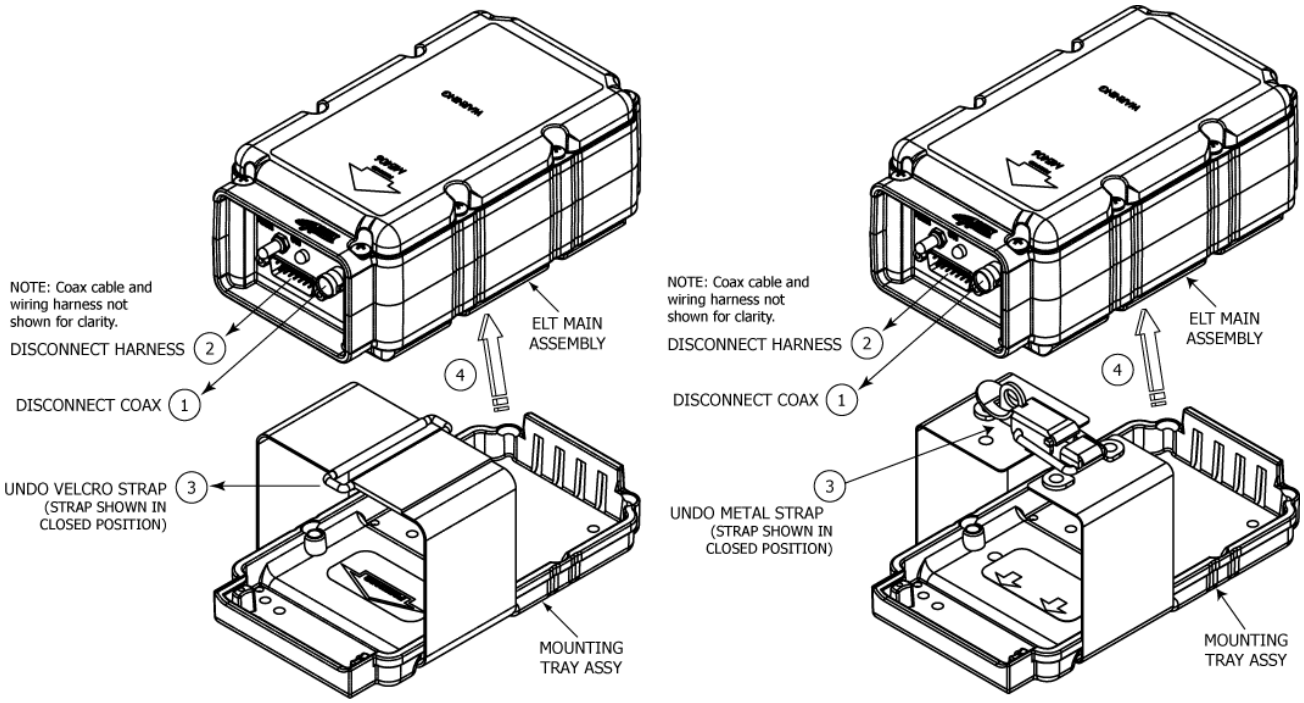

Figure 12 ELT Removal Sequence

2) Disconnect the antenna coax cable.

   NOTE: Check the coax cable center conductor pin which is prone to retracting into the connector housing.

3) Remove remote switch harness D-sub plug.

4) Open the Velcro or metal strap.

   NOTE 1: When opening the metal strap, use caution to avoid pinching your fingers in the latch. A flat screwdriver can be placed under the latch to 'spring' it open if needed.

   NOTE 2: Never open the strap by prying it open from the top. Once the latch is disengaged, loosen the straps from the sides only, as shown by the arrows in Figure 13.

5) Slide the ELT up and out, and away from the mounting tray.

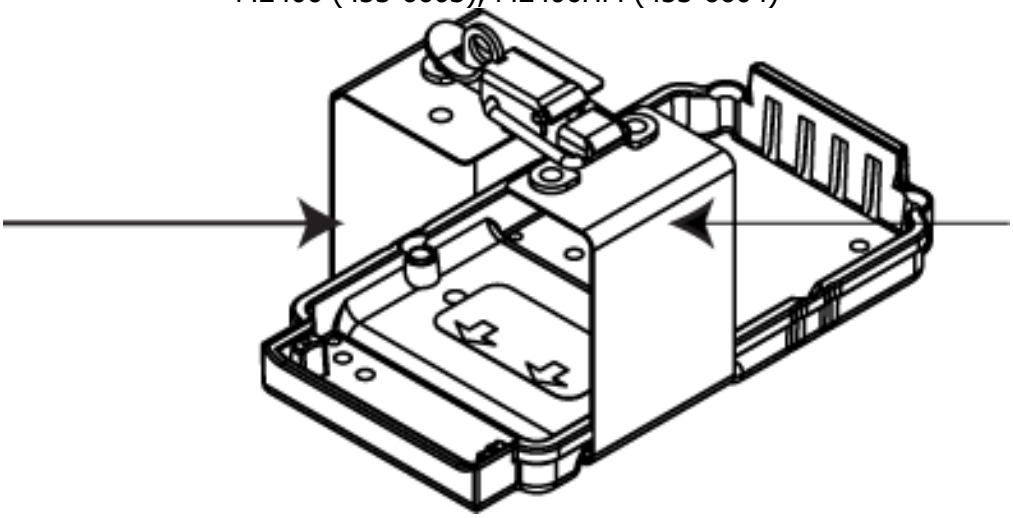

Figure 13 Metal Strap Opening

TASK 25-62-30-050-801

2. Battery

SUBTASK 25-62-30-050-001

A. Battery Pack Removal

CAUTION: THE BATTERY PACK CONTAINS ELECTROSTATIC DISCHARGE SENSITIVE (ESD) COMPONENTS AND IT MUST BE HANDLED WITH CARE. IF POSSIBLE, WEAR A GROUNDED WRIST STRAP WHEN HANDLING THE BATTERY PACK DURING INSTALLATION ACTIVITIES. TAKE PARTICULAR CARE TO AVOID TOUCHING THE EXPOSED CIRCUIT BOARD AND CONNECTOR PINS ON THE BOARD.

CAUTION: THE BATTERY PACK IS CONNECTED TO THE ELT VIA A SHORT INTERCONNECT FLEX CABLE, WHICH LIMITS THE DISTANCE THE TWO COMPONENTS CAN BE SEPARATED UNTIL THE FLEX CABLE IS DISCONNECTED.

1) See Figure 14 Battery Pack Removal.

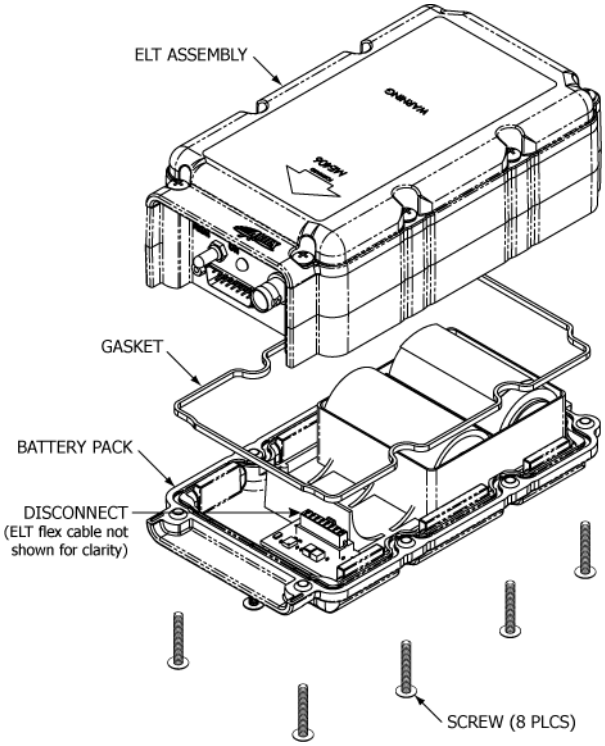

Figure 14 Battery Pack Removal

2) Turn the ELT upside down, such that the battery pack is bottom side up (battery cover is identified with embossed text "BATTERY ACCESS ON THIS SIDE").
3) Remove the eight screws from the battery cover.
4) Lay the ELT on its side, while keeping the ELT and battery pack securely held together.
5) Separate the battery pack from the ELT, taking care not to put strain on the short flex cable.
6) Disconnect the flex cable from the small circuit board mounted in the battery pack.

TASK 25-62-30-500-801

3. Material or Equipment Return

SUBTASK 25-62-30-510-001

A. Shipment Information

1) If any material or equipment is to be returned to the factory, under warranty or otherwise, ACR Electronics must be notified prior to shipment with the following information:
   a) Model and serial number of equipment being returned,
   b) Date purchased,
   c) Date placed in service,
   d) Number of hours in service,
   e) Nature and cause of failure, and
   f) Remarks, if any.

SUBTASK 25-62-30-580-001

B. Return Material Authorization

1) Upon receipt of such notice, ACR Electronics, Inc. will issue a Return Material Authorization (RMA) number which then authorizes return of the material or equipment. Contact ACR Electronics to obtain the RMA number at the address below:

Repair and Overhaul

ACR Electronics, Inc.

5757 Ravenswood Road

Fort Lauderdale, FL 33312, USA

Phone: (954) 981-3333

Fax: (954) 983-5087

   a) Failure to obtain a RMA number and provide the details listed in SUBTASK 25-62-30-510-001 on page 43 may cause unnecessary delay and/or rejection of the returned material or equipment.
   b) All material or equipment returned to the factory must be freight prepaid.
   c) Acceptable methods of shipment for international return are Airborne, Burlington Air, DHL, Emery, Federal Express, UPS International, and World Wide only.

      NOTE: Do not use "International Commercial Airlines", such carriers may cause a loss of returned material or equipment.

TASK 25-62-30-410-801

1. Regulatory Requirements and Guidelines

SUBTASK 25-62-30-990-001

A. For US Registered aircraft:

WARNING: FAILURE TO REGISTER THIS ELT WITH NOAA BEFORE INSTALLATION COULD RESULT IN A MONETARY FORFEITURE BEING ISSUED TO THE OWNER.

1) To enhance protection of life and property, it is mandatory that each 406.0-406.1 MHz ELT must be registered with NOAA before installation and that information be kept up-to-date. In addition to the identification plate or label requirements, each 406.0-406.1 MHz ELT is provided on the outside with a clearly discernable permanent plate or label containing the following statement: "The owner of this 406.0-406.1 MHz ELT must register the NOAA identification code contained on this label with the National Oceanic and Atmospheric Administration (NOAA), whose address is:

NOAA/SARSAT Beacon Registration

NSOF E/SPO53

1315 East West Hwy

Silver Spring, MD 20910-3282

2) Aircraft owners must advise NOAA in writing upon change of aircraft or ELT ownership, or any other change in registration information. Fleet operators must notify NOAA upon transfer of ELT to another aircraft outside of the owner's control, or another change in registration information. NOAA will provide registrants with proof of registration and change of registration postcards.

SUBTASK 25-62-30-990-002

B. TSO C126, Paragraph D

1) TSO approval of the ELT does not constitute installation approval. All ELT installations are subject to field approval for a given airframe by either an approved FAA DER or FAA FSDO. For installations outside the US, contact your local civil aviation regulatory agency for details.
   a) The remote switch is a requirement of TSO C126 and installation is not optional.
   b) The buzzer is a requirement of TSO C126 and installation is not optional.

SUBTASK 25-62-30-990-003

C. FAA

1) This manual constitutes supporting data, as described in AC43.9-1, Paragraph 6.h.(2) and AC 43-210, Chapter 2, Paragraph 201(a)(6), and as such may be used as support for FAA field approval of the ELT installation.
2) In addition to the procedures outlined herein and in accordance with FAR Part 43, the installer must adhere to the aircraft manufacturer's instructions and recommendations and the guidelines provided by FAA Advisory Circular AC 43.13-2 "Acceptable Methods, Techniques, and Practices - Aircraft Alterations," specifically Chapters 1 through 3, 11, and 13.
3) By signing the aircraft logbook, and FAA Form 337, the installer is stating the installation has been performed in accordance with current FAR requirements and the procedures outlined herein. The

completed Form 337 is provided to the FAA and also becomes a permanent part of the aircraft maintenance records in accordance with AC43-9, Paragraph 17.

SUBTASK 25-62-30-990-004

D. Canada

1) All installations must be performed in accordance with Canadian Aviation Regulations (CAR) Part V, Chapter 551, Paragraph 551.104.

SUBTASK 25-62-30-990-005

E. Other Countries

1) Installations in aircraft outside of the United States and Canada, must be performed in accordance with applicable regulatory authority rules and regulations.

SUBTASK 25-62-30-990-006

F. RTCA

1) DO-204, § 3.1.8 guidelines for mounting a ELT:
   a) The ELT shall be mounted to primary aircraft load carrying structures, such as trusses, bulkheads, longerons, spars, or floor beams.
   b) The mounts shall have a maximum static local deflection no greater than 0.1 inches (2.5 mm) when a force of 100 lbs (450 newtons) is applied to the mount in the most flexible direction. Deflection measurements shall be made with reference to another part of the aircraft not less than 1 foot (0.3 meters) nor more than 3 feet (1.0 meters) from the mounting location.
2) DO-182, § 6.2.2.b recommends that:
   a) To maximize the probability of the ELT transmitting a detectable signal after a crash, all ELT system components, which must survive a crash intact, e.g. transmitter and external antenna, should be attached to the airframe in such a manner that the attachment system can support a 100 *g* load, (ELT weight x 100, ELT antenna weight x 100, etc.) applied through the center of gravity of the component (ELT, antenna, etc.) in the plus and minus directions of the three principal axes of the aircraft.
   b) Post-crash critical components of the ELT system, e.g. transmitter and external antenna, should be mounted as close to each other as possible.
   c) The antenna coax cable should not cross any production breaks, e.g., major structure sections, such that the ELT and antenna are in the same section of the aircraft and as close together as possible.
   d) If the ELT and external antenna are on opposite sides of an airframe production break, the components should be secured to each other by a tether that can support a 100 *g* load (ELT weight x 100). The interconnecting antenna-to-ELT coax cable should have sufficient slack on both ends that it will not be subjected to any tensile load and should be tied loosely to the tether.

TASK 25-62-30-450-801

2. Mounting Tray

SUBTASK 25-62-30-450-001

A. Location

CAUTION: MANY ORIGINAL ELT INSTALLATIONS ARE INADEQUATE AS FAR AS UNIT LOCATION AND SURFACE RIGIDITY ARE CONCERNED. BECAUSE OF THE CRITICAL FUNCTION AN ELT PERFORMS, IT IS IMPORTANT THE INSTALLATION FOLLOWS THE INSTRUCTIONS AND RECOMMENDATIONS HEREIN.

CAUTION: THE MOUNTING SURFACE MUST BE EXTREMELY RIGID; THEREFORE, MOUNTING AN ELT DIRECTLY TO THE AIRCRAFT SKIN IS UNACCEPTABLE. MOUNTING THE ELT DIRECTLY TO THE AIRCRAFT SKIN INDUCES "CRASH HIDING" VIBRATIONS AND PROVIDES A VERY POOR MOUNTING SURFACE.

CAUTION: AVOID LOCATING THE ELT WHERE IT WILL BE SUBJECTED TO UNPROTECTED EXPOSURE TO HARSH CHEMICAL FLUIDS SUCH AS DEICING COMPOUNDS. THESE TYPES OF CHEMICAL FLUIDS CAN PROMOTE CRACKING AND FRACTURING OF THE ELT MOUNTING FRAME AND HOUSING COMPONENTS BY DEGRADING THE STRUCTURAL INTEGRITY OF THESE COMPONENTS. THESE SAME CHEMICAL AGENTS MAY ALSO CAUSE CORROSION OF ELECTRICAL CONNECTIONS.

WARNING: AVOID LOCATING THE ELT IN SUCH A LOCATION WHERE IT MAY BE SUBJECT TO FLYING OBJECTS OR AIRCRAFT STRUCTURAL PARTS THAT MAY IMPACT THE ELT DURING AN AIRCRAFT CRASH. MOUNTING AN ELT IN A VULNERABLE AREA CAN RESULT IN AN IMPACT BEYOND THE ELT'S TSO CRASH RATING OF 100G, CAUSING DAMAGE AND PREVENTING CORRECT OPERATION DURING A POST-CRASH ENVIRONMENT.

1) Select a suitable location for the ELT mounting tray. See Figure 15 ME406 Series ELT Outline and Dimensions on page 47 and Figure 16 ME406 Metal Strap Minimum Clearance Dimensions on page 48. Refer to these dimensions when determining mounting location.

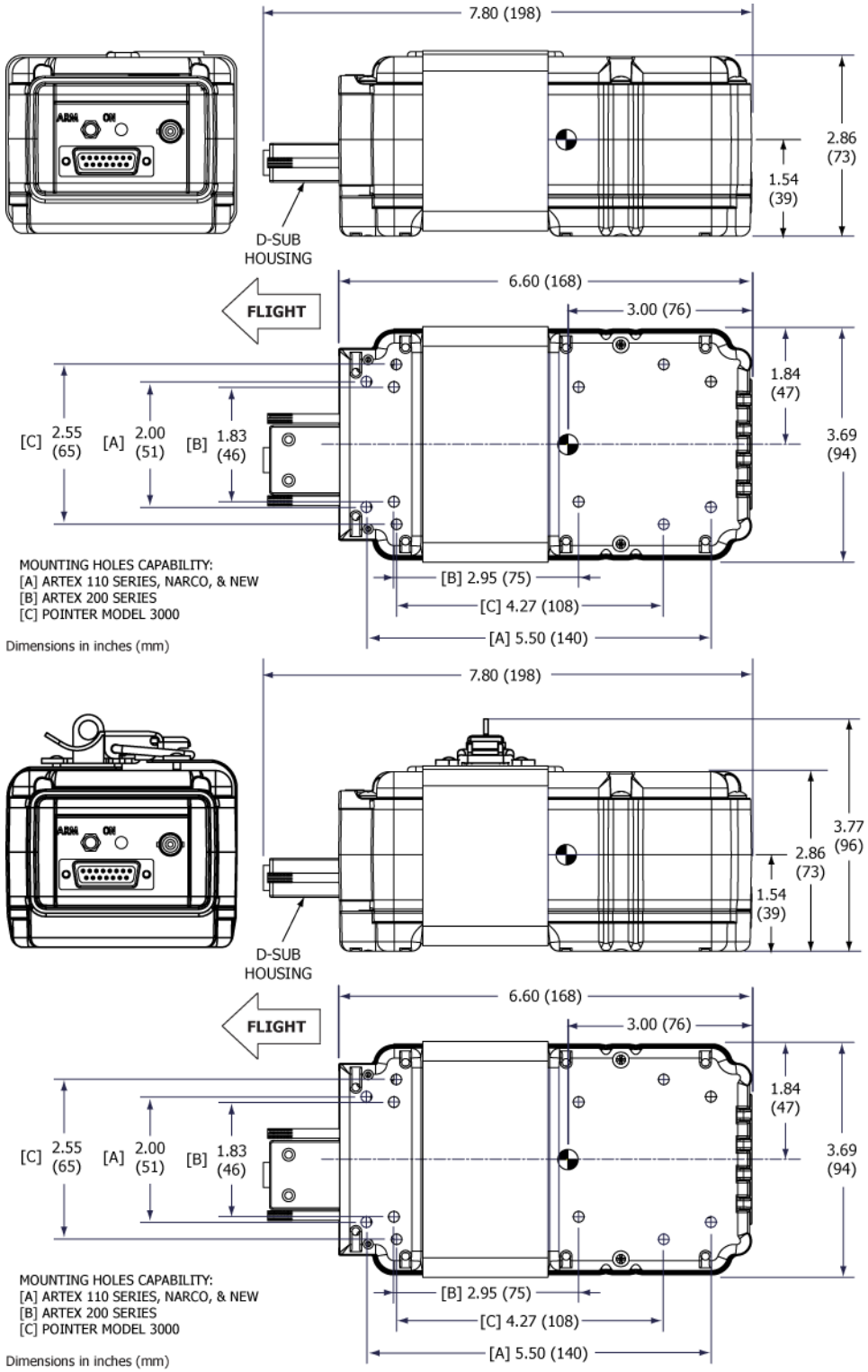

Figure 15 ME406 Series ELT Outline and Dimensions

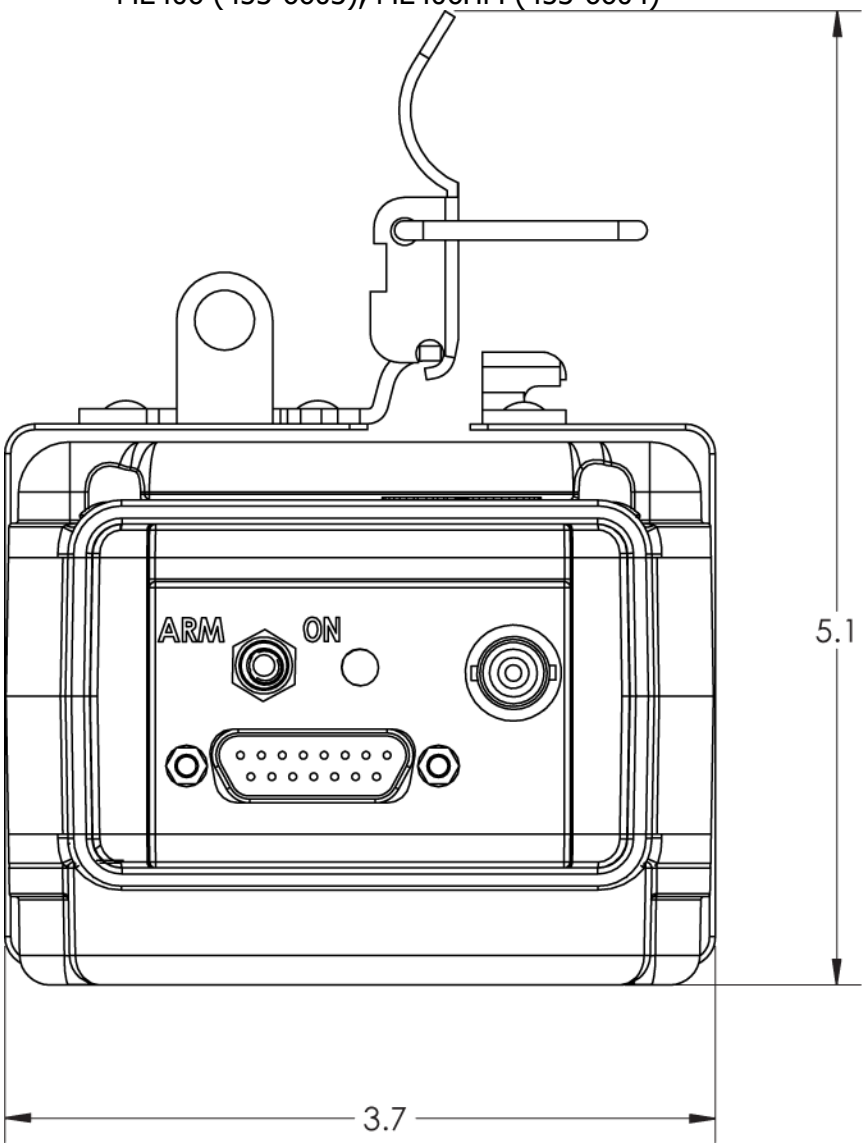

Figure 16 ME406 Metal Strap Minimum Clearance Dimensions

2) Mount the ELT as far aft as practical, but where it can be easily retrieved for maintenance.

   NOTE: Statistics show that the tail section of an airplane is likely to be less damaged during a crash; therefore, providing a good mounting environment for the ELT.

3) Additional installation guidance may be found in AC 43.13-2, Chapter 2, Paragraph 28, which specifically addresses ELT installations.

SUBTASK 25-62-30-450-002

B. Installation

1) See Figure 17 Typical Mounting Tray Installation.

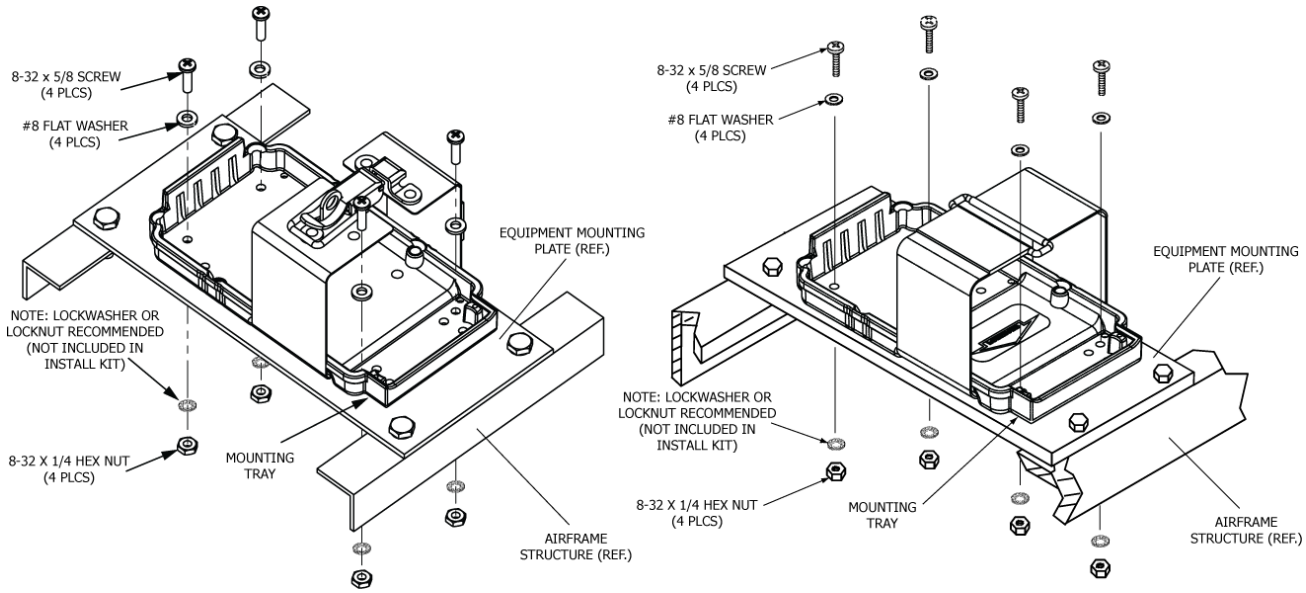

Figure 17 Typical Mounting Tray Installation

2) Install the necessary mounting structure as appropriate for the specific installation.
3) Align the mounting tray (452-3034) on the mounting structure, such that the arrow on the tray is within 10° of the longitudinal axis of the aircraft and pointing in the direction of flight.

   NOTE: Refer to TASK 25-62-30-410-803 on page 65 for guidelines on ELT orientation in a helicopter.

4) Mark the four holes needed for mounting the tray, using the tray as a pattern. The hole pattern is also illustrated in Figure 15 ME406 Series ELT Outline and Dimensions on page 47.
5) Drill the four mounting holes with a #19 or 4.25 mm drill.
6) Install the mounting tray with the hardware supplied in the installation kit (455-7423), as shown in Figure 17 Typical Mounting Tray Installation on page 49.

   NOTE: The use of substitute mounting hardware is acceptable provided the hardware used meets or exceeds the strength and corrosion resistance of the original hardware.

   a) Torque to 12 ±1 lb-in (136 ± 11 N•cm).

TASK 25-62-30-450-802

3. Antenna

SUBTASK 25-62-30-990-001

A. Selection

1) Use only antennas approved for use with the ME406 Series ELT. The ELT will not work properly without being connected to an antenna for which it was designed.
2) Verify the antenna selected matches the requirements of the specific installation. Considerations include aircraft maximum rated speed, location restrictions, and any other considerations specific to the installation.
3) Per FAA TSO C126 and ETSO C126, ELTs must be installed with only the components that have been certified by either the manufacturer of the unit or via a Type Certificate authorization done by the airframe manufacturer. Contact Artex Technical Support for further information regarding component and accessory selection.

SUBTASK 25-62-30-450-001

B. Location

1) Select a suitable location for the antenna.
   a) Place the antenna in a location where the antenna can be installed within 15° of vertical and with at least 30 inches (762 mm) of clearance from other antennas, particularly VHF, in accordance with RTCA/DO-204, § 3.1.10.2.

      NOTE: AC 43.13-2, Chapter 3 recommends a minimum distance of 36 inches (914 mm) clearance between antennas.

   b) Additional location guidance may be found in AC 43.13-2, Chapter 3, which deals specifically with antenna installations.

SUBTASK 25-62-30-450-002

C. Installation

NOTE: Per FAA TSO C126a, "Those installing this article, on or in a specific type or class of aircraft, must determine that the aircraft installation conditions are within the TSO standards. TSO articles must have separate approval for installation in an aircraft."

CAUTION: ARTEX CANNOT VERIFY APPROPRIATE ANTENNA SELECTION PER EACH AIRFRAME. MANY CONSIDERATIONS MUST BE EVALUATED DURING THE ANTENNA SELECTION PROCESS, SUCH AS DYNAMIC / STATIC LOADING. CERTAIN SPECIAL CONSIDERATIONS NEED TO BE ACCOUNTED FOR SUCH AS AIRFLOW SPEED OVER THE ANTENNA SURFACES (FRONTLOAD / SIDELOAD). CONSULT FAA AC 43.13-2 AND AIRFRAME MANUFACTURER FOR ANTENNA INSTALLATION PRACTICES AND REQUIREMENTS. CONTACT ARTEX TECHNICAL SUPPORT FOR MORE INFORMATION.

WARNING: PER FAA AC 43.13-2: "PAINTING AN ANTENNA OR APPLY PROTECTIVE COATINGS OR DEVICES THAT ARE NOT APPROVED ARE NOT ALLOWED [UNDER THIS AC]. PAINT IS AN RF DE-TUNER. IF AN ANTENNA IS PAINTED IN THE FIELD, PAINT TYPE AND PAINT THICKNESS PRESENT UNCONTROLLED VARIABLES THAT WILL AFFECT AN ANTENNA'S PERFORMANCE AND MAY RESULT IN THE ANTENNA NO LONGER MEETING ITS SPECIFICATIONS OR TECHNICAL STANDARD ORDER (TSO)." **ARTEX DOES NOT AUTHORIZE OPERATORS OR OUTSIDE MAINTENANCE ORGANIZATIONS TO PERFORM FIELD REPAIRS OR PAINTING.** CONTACT ARTEX TECHNICAL SUPPORT FOR MORE INFORMATION.

1) Install a doubler plate if necessary to meet rigidity requirements. A 20 lb (9.1 kg) force applied to the antenna in all directions should not cause an appreciable distortion in the aircraft skin.
2) Install a ground plane if necessary. In certain applications, particularly those where antennas are installed on composite, fabric, or wood airframes, a ground plane is required.
3) Drill the antenna mounting holes and coax connector hole referring to the appropriate antenna illustration for hole patterns and hole sizes.
   a) See Figure 18 Rod Antenna 110-338 and Whip Antenna 110-773 Outlines and Dimensions on page 51.
4) Mount the antenna referring to the appropriate antenna illustration for hardware requirements, torque, and other applicable installation requirements.
5) A coax cable, 6 feet (1.8 m) long, is provided as part of the ELT kit.

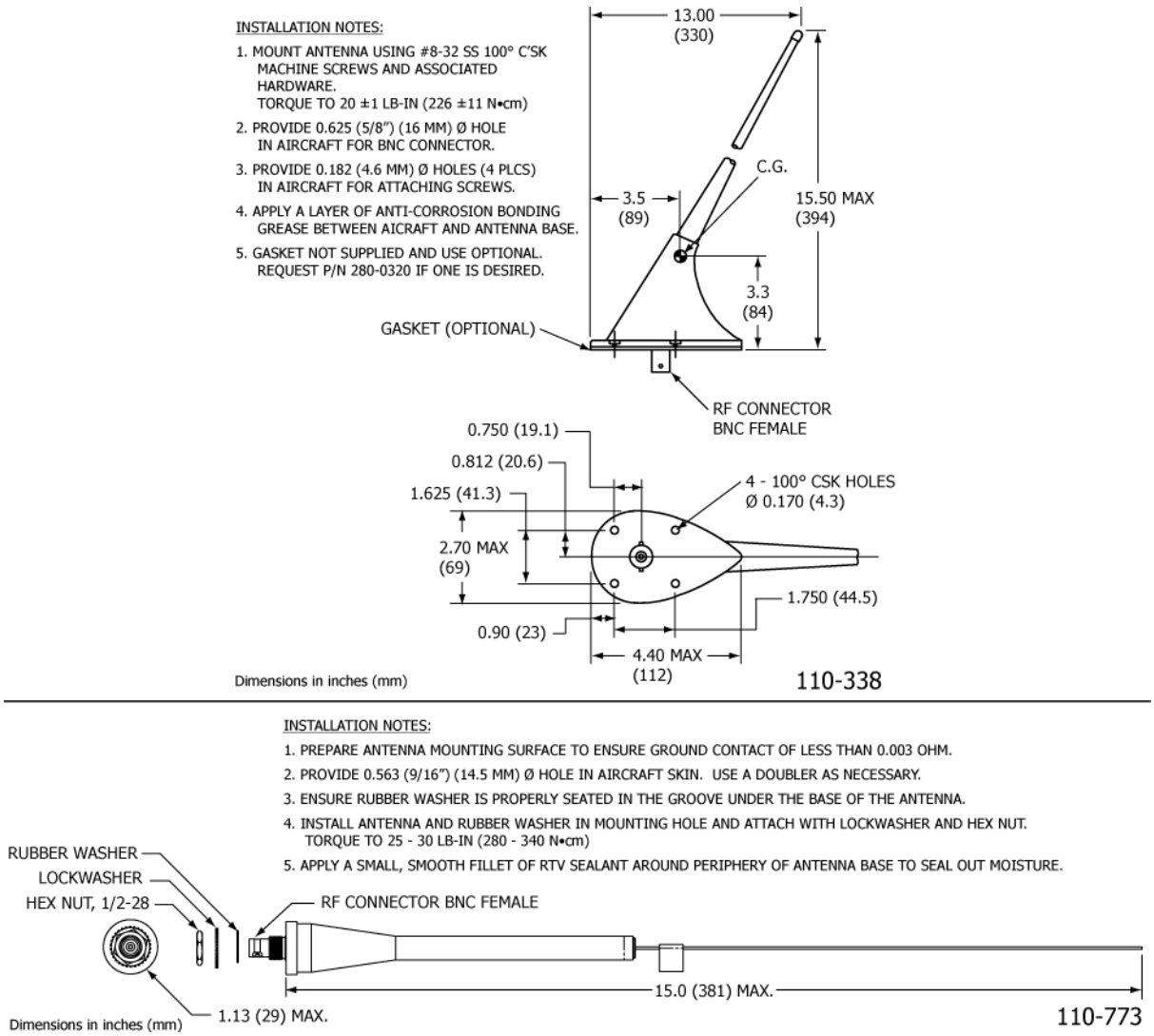

Figure 18 Rod Antenna 110-338 and Whip Antenna 110-773 Outlines and Dimensions

TASK 25-62-30-450-803

4. Remote Switch

SUBTASK 25-62-30-450-001

A. Location

NOTE: This procedure is applicable to the most commonly used remote switch (345-6196-04). If an optional switch is installed in lieu of this one, the applicable installation instructions should be consulted.

1) Select a suitable location for the remote switch assembly.
2) The switch assembly must be mounted in the cockpit where the pilot can easily reach the switch and see the LED.
3) The switch assembly requires a space approximately 2.0 x 1.3 in. (51 x 33 mm) on the panel surface and behind the panel. See Figure 16 Remote Switch Outline and Dimensions.

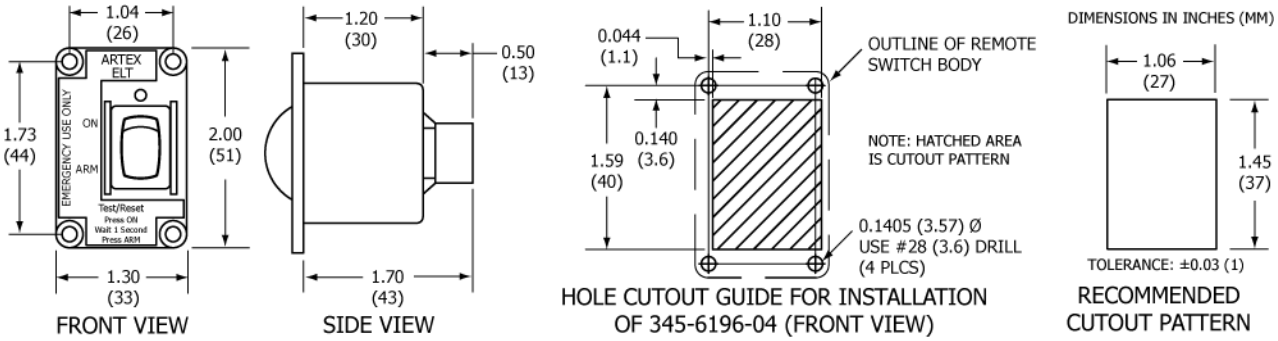

Figure 19 Remote Switch Outline and Dimensions

SUBTASK 25-62-30-450-002

B. Installation

1) Mark the cutout on the cockpit panel. See Figure 19 Remote Switch Outline and Dimensions.
2) Fit the switch assembly into the cutout and mark the four screw holes, then remove the switch.
3) Drill the screw holes with a #28 or 3.6 mm drill.
4) Install the switch assembly using the hardware provided in the remote switch installation kit (455-6196).

   NOTE: Step 4 may be accomplished after wiring is completed and the harness plug has been plugged into the switch assembly in accordance with the requirements of SUBTASK 25-62-30-450-010 on page 61. If such is the case, perform a fit check at this time.
5) Apply the "For Aviation Emergency Use Only/Unauthorized Use Prohibited" placard (591-0428), provided in the installation kit, as close to the switch as practical.

TASK 25-62-30-450-804

5. Buzzer

SUBTASK 25-62-30-450-001

A. Location

CAUTION: PLACING THE BUZZER IN THE COCKPIT IS NOT RECOMMENDED DUE TO THE POTENTIAL FOR DISTRACTION. THE BUZZER PRODUCES A LOUD, SIREN-TYPE SOUND WHEN THE ELT IS ACTIVATED. SINCE THE BUZZER OPERATES IN TANDEM WITH THE COCKPIT LED, IT WOULD ONLY SERVE AS A REDUNDANT WARNING INDICATOR IN THE COCKPIT.

1) Select a suitable location for the buzzer.

NOTE: The buzzer may be located anywhere in the aircraft; however, the recommended location is near the ELT, as the buzzer is loud enough to be heard outside the aircraft when the engine(s) is not running. When the engine(s) is running, the LED on the cockpit remote switch assembly will warn the pilot the ELT is active.

SUBTASK 25-62-30-450-002

B. Installation

1) Fabricate a bracket suitable for supporting the buzzer. See Figure 20 Buzzer Outline and Dimensions.

NOTE: Refer to the aircraft manufacturer's written instructions or AC 43.13-2, as applicable, for approved bracket fabrication and installation methods.

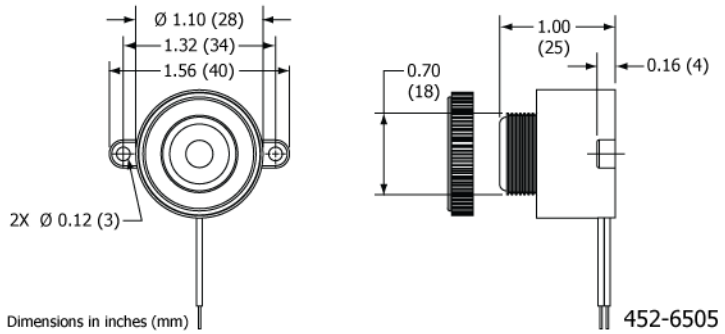

Figure 20 Buzzer Outline and Dimensions

2) Attach the bracket to the airframe such that the buzzer is adequately supported and does not show any significant evidence of distorting the airframe skin.
3) Install the buzzer in the bracket.
   a) Remove the panel mounting nut and insert the buzzer in the bracket.

      NOTE: Alternatively, the buzzer may be attached to the support using the mounting holes on the buzzer body and appropriate hardware.

   b) Install the panel mounting nut and tighten it securely.

TASK 25-62-30-450-805

6. Wiring

SUBTASK 25-62-30-990-001

A. General Considerations and Recommendations

CAUTION: IF GROUND OR OTHER CONNECTIONS ARE BROKEN OR OTHERWISE DAMAGED, THE ELT IS STILL CAPABLE OF AUTOMATIC ACTIVATION; HOWEVER, THE COCKPIT REMOTE SWITCH MAY BE INCAPABLE OF RESETTING THE ELT AND OPERATION MAY NOT BE INDICATED ON THE REMOTE SWITCH LED.

CAUTION: INCORRECT TERMINATION OF THE WIRING IN THE CONNECTORS MAY DAMAGE THE ELT, CAUSE TRANSMISSION ISSUES, OR RESULT IN A NON-FUNCTIONING REMOTE SWITCH. VERIFY THE WIRING AGAINST THE WIRING DIAGRAM AND PERFORM A CONTINUITY CHECK TO CONFIRM GOOD CONNECTIONS AND PROPER PIN LOCATIONS.

CAUTION: TO PREVENT INADVERTENT ELT ACTIVATION OR POSSIBLE COMPONENT DAMAGE, DO NOT CONNECT THE HARNESS TO THE ELT OR COCKPIT REMOTE SWITCH UNTIL ALL POWER AND GROUND WIRING CONNECTIONS ARE COMPLETED.

1) The following wiring and grounding considerations and recommendations are applicable:
   a) Minimum 22 AWG wire size.
   b) Shielding is recommended to help prevent EMI and RF interference.
   c) Use high quality conductor meeting MIL-W-16878, M22759, M27500, or a commercial equivalent acceptable for use in aircraft applications.
   d) Provide a "Drip Loop" in the remote switch harness connection to the ELT to divert moisture from the connector. See TASK 25-62-30-990-805 on page 15 for a definition.
   e) Provide a "Service Loop" in the remote switch harness connection to the remote switch assembly, such that the assembly can be withdrawn from the panel far enough to easily disconnect the harness plug. See TASK 25-62-30-990-805 on page 15 for a definition.
   f) ELT and remote switch grounds must be common to aircraft ground and should be less than 10 Ω.
2) See Figure 21 Metal Airframe Wiring Diagrams on page 55 and Figure 22 Composite Airframe Wiring Diagrams on page 56. Choose the appropriate wiring diagram, depending upon the following factors:
   a) Metal or composite airframe, and
   b) A shielded or unshielded remote switch harness cable is chosen for the installation.

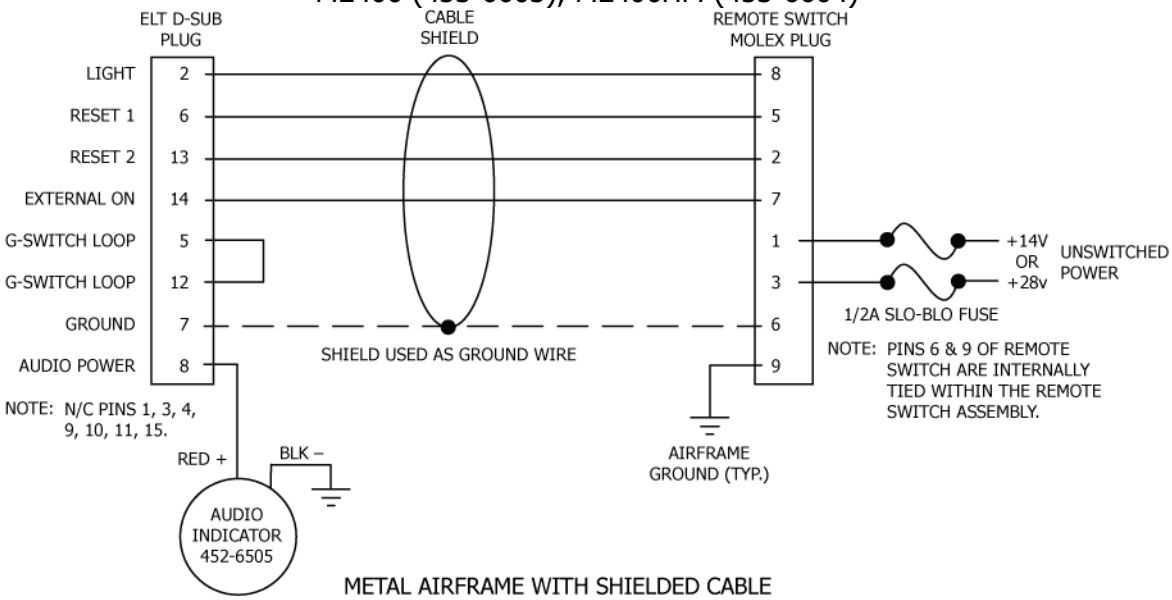

METAL AIRFRAME WITH SHIELDED CABLE

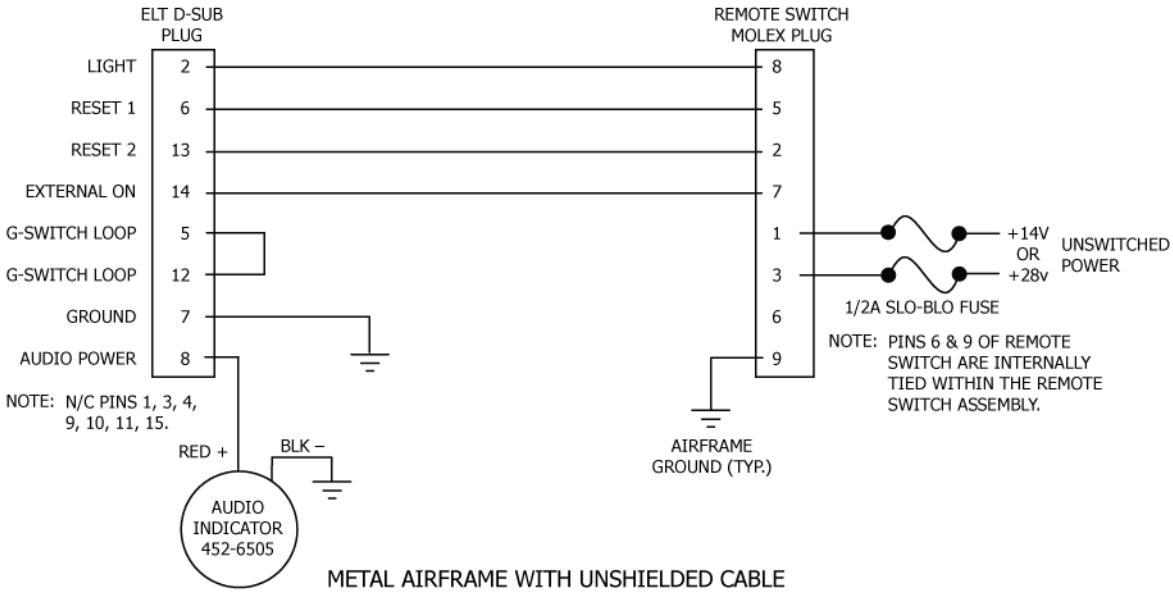

METAL AIRFRAME WITH UNSHIELDED CABLE

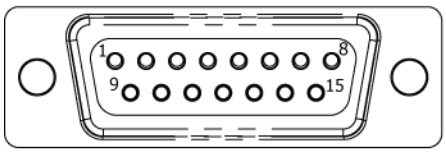

SOLDER CUP (BACK) SIDE OF D-SUB PLUG FOR ELT. HOLE NUMBERING IS IDENTICAL TO THAT INSCRIBED ON ACTUAL PLUG.

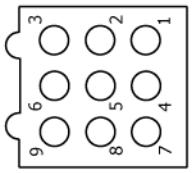

PIN INSERTION END OF MOLEX PLUG FOR REMOTE SWITCH ASSEMBLY. HOLE NUMBERING IS IDENTICAL TO THAT INSCRIBED ON ACTUAL PLUG. ORIENTATION SHOWN IS SAME AS INSERTION ORIENTATION FOR INSTALLED SWITCH.

Figure 21 Metal Airframe Wiring Diagrams

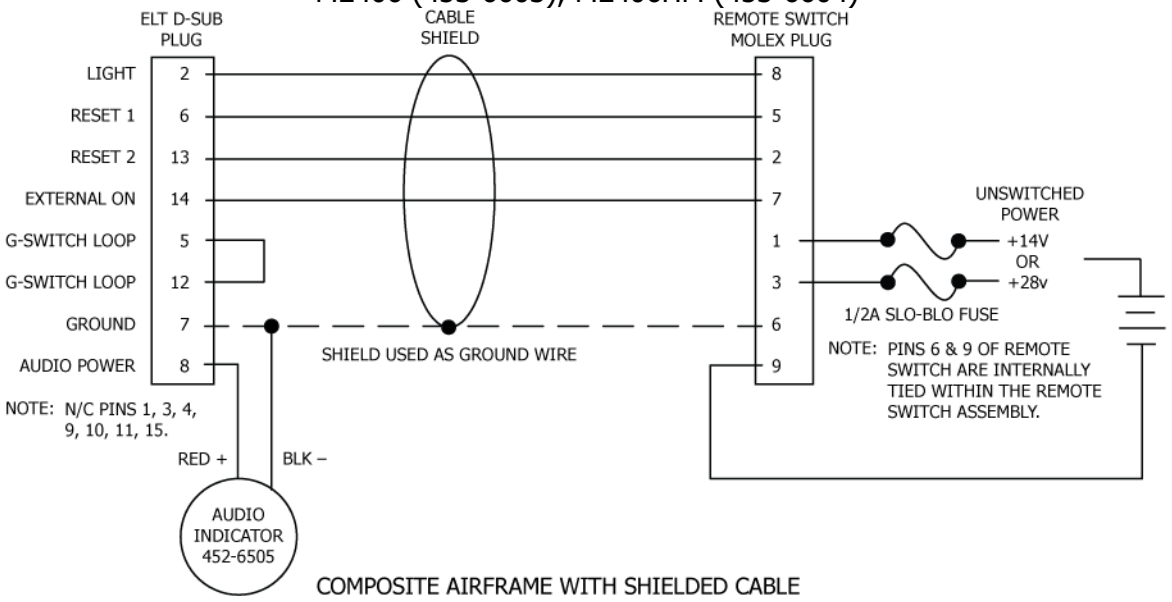

COMPOSITE AIRFRAME WITH SHIELDED CABLE

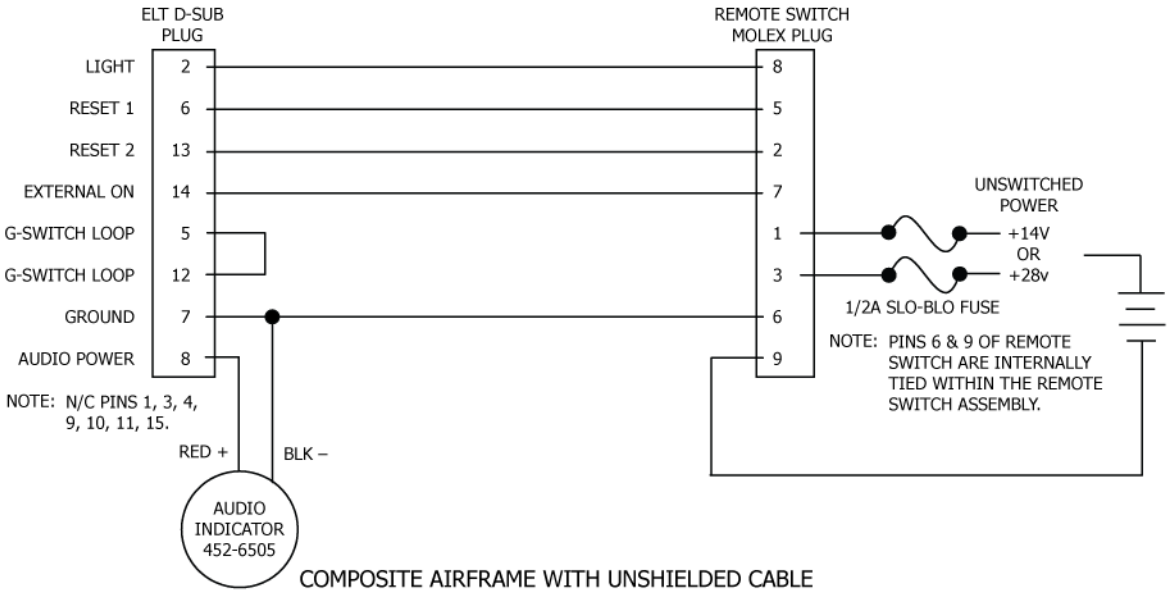

COMPOSITE AIRFRAME WITH UNSHIELDED CABLE

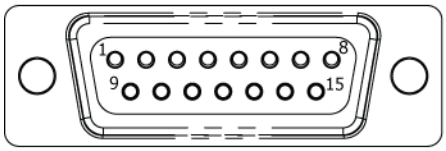

SOLDER CUP (BACK) SIDE OF D-SUB PLUG FOR ELT. HOLE NUMBERING IS IDENTICAL TO THAT INSCRIBED ON ACTUAL PLUG.

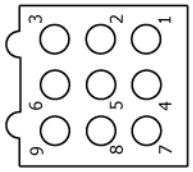

PIN INSERTION END OF MOLEX PLUG FOR REMOTE SWITCH ASSEMBLY. HOLE NUMBERING IS IDENTICAL TO THAT INSCRIBED ON ACTUAL PLUG. ORIENTATION SHOWN IS SAME AS INSERTION ORIENTATION FOR INSTALLED SWITCH.

Figure 22 Composite Airframe Wiring Diagrams

B. Remote Switch Harness Fabrication

1) See Figure 20 Remote Switch Harness Arrangement.

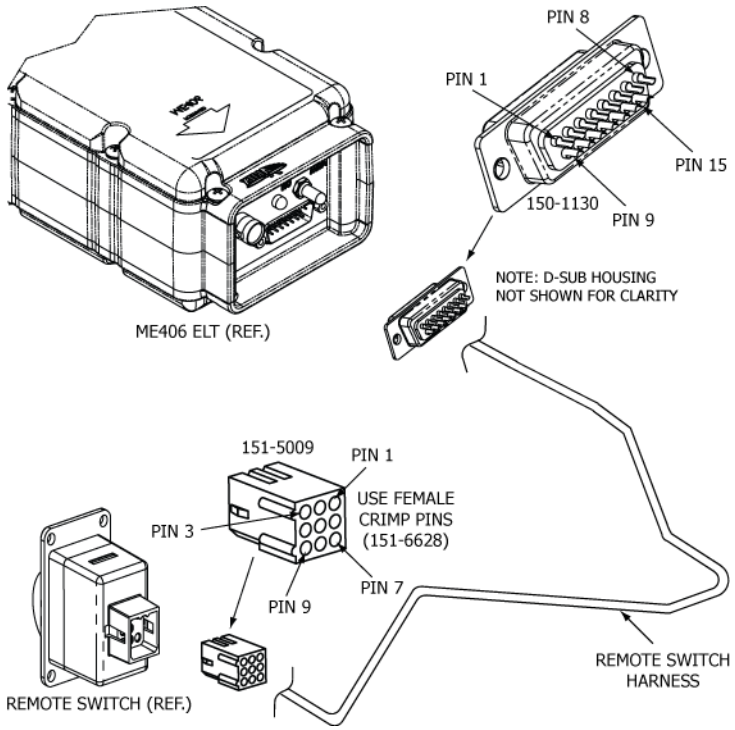

Figure 23 Remote Switch Harness Arrangement

2) Fabricate a harness long enough to reach from the ELT to the cockpit remote switch, allowing enough slack to provide a drip loop at the ELT end and a service loop at the cockpit remote switch end. Refer to the appropriate wiring diagram.
   a) Strip approximately 0.15 in. (3 mm) of insulation from the remote switch end of each of the harness cable wires.
   b) Dress and tin the bare wires to prevent the strands from fraying during terminal crimping operations.
3) Fabricate ground wires as required, based on the wiring diagram appropriate for the installation.
4) Fabricate a power wire long enough to reach from the remote switch plug (Pin 1 or Pin 3) to the selected aircraft power source.
5) Prepare the wires fabricated in Steps (3) and (4), as described in Steps (2)(a) and (2)(b).
6) Fabricate two wires, one of sufficient length to reach from the ELT D-Sub connector plug to the buzzer and the other from the buzzer to ground.

   NOTE: These wires provide power and ground for the buzzer. Use appropriate means of identification for the wires, such that the wires can be readily identified.

7) Prepare the wires fabricated in Step (6), as described in Steps (2)(a) and (2)(b).
8) Crimp appropriately sized ring terminals on the buzzer ends of the buzzer power and ground wires.
9) Crimp an appropriately sized ring terminal on the airframe end of the ground wires.
10) Crimp an appropriately sized ring terminal on the remote switch power source wire end.

NOTE: If desired, the power wire may be spliced to an unswitched power source in a manner acceptable to the aircraft manufacturer, or as described in AC 43.13-1, Paragraph 11-167.

11) Crimp female terminal pins (151-6628) to the cockpit remote switch end, as follows:

    NOTE: Use Molex crimp tool 63811-3300, or an equivalent tool for 0.062 in. terminal pins.

    a) Each harness wire.
    b) Remote switch ground wire.
    c) Remote switch power wire.

12) Bundle the wiring into a complete harness, with breakouts as appropriate, such that the wiring can be properly supported and attached to the airframe. Refer to the aircraft manufacturer's written instructions or AC 43.13-1, Chapter 11, § 9 through 12, as applicable.

SUBTASK 25-62-30-450-002

C. ELT D-Sub Plug Installation

NOTE: Artex supplies a DB15 female solder contact connector with all ME406 ELT kits. If a crimp contact connector is preferred, it is acceptable to purchase and use an alternate DB15 crimp contact connector. Ensure it conforms to MIL-C-24308 or other commercial specification to ensure performance requirements are met.

NOTE: If moisture intrusion is a possibility, seal the back side of the connector. See SUBTASK 25-62-30-450-003 on page 59.

1) Select a rubber grommet, supplied as part of the D-Sub housing kit (150-1127), that fits snugly around the harness wiring.
2) Feed the wiring harness, ground wire, and buzzer power wire through the rubber grommet, such that the raised collar end of the grommet fits inside the housing. See Figure 24 D-Sub Plug Assembly on page 59.

    NOTE: For composite airframe installations, the buzzer ground wire should also be routed through the grommet.

3) Slide the grommet away from the cable and other conductor ends, such that it does not interfere with soldering the conductors to the plug (150-1130).
4) Solder the buzzer ground conductor to the cable shield or ground conductor for composite airframe installations. See Figure 22 Composite Airframe Wiring Diagrams on page 56.
5) Fabricate a short jumper wire, approximately 1.5 in. (38 mm) long.

    CAUTION: THE ELT WILL NOT AUTOMATICALLY ACTIVATE IF THE JUMPER (G-SWITCH LOOP) IS NOT PROPERLY INSTALLED IN THE ELT D-SUB CONNECTOR.

    a) Strip approximately 0.15 in. (3 mm) of insulation from both ends of each of the wire.
    b) Dress and tin the bare wire ends to prevent the strands from fraying during terminal crimping operations.
    c) Solder the jumper wire to D-Sub pins 5 and 12.

6) Solder the wiring to the D-Sub plug as follows, referring to the wiring diagram appropriate for the installation:

    a) Harness wires,

        NOTE: Make note of the wiring identification and pin location relationships, such that the wiring at the remote switch end can be terminated correctly.

    b) Buzzer power wire, and
    c) Ground wire.

7) Fit the plug into a housing half positioning the grommet such that it fits into the recess on the cable end of the housing, with the raised collar step against the housing inside face.
8) Install the bracket washers onto the thumbscrews.
9) Insert thumbscrews into lower housing half.
10) Fit the other housing half into place.
11) Screw housing halves together using the screws and nuts supplied as part of the housing kit.
12) Install the strain relief clamp.

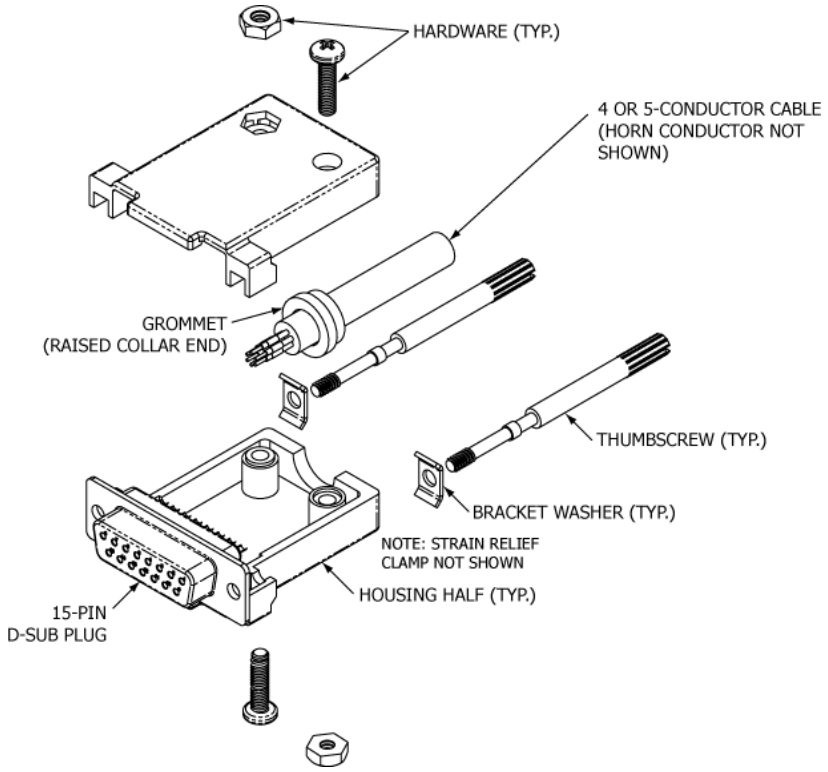

Figure 24 D-Sub Plug Assembly

SUBTASK 25-62-30-450-003

D. Cockpit Remote Switch 9-Pin Plug Installation

NOTE: If moisture intrusion is a possibility, apply a thin bead of RTV over rear of the MOLEX connector to prevent corrosion buildup. Use Dow Corning RTV-3145 or equivalent.

1) Insert the wiring pins in the Molex 9-pin cockpit remote switch plug (151-5009), referring to the wiring diagram appropriate for the installation, as follows:
   a) Insert each harness female pin into the plug, referring to the wire identification and pin relationships recorded in Step C.(5)(a).

      NOTE: Terminal pins may be removed from the plug using Molex extraction tool 11030002, or equivalent.

   b) Insert the remote switch power wire female pin into Pin 1 or Pin 3 of the plug, as appropriate for the selected 14V or 28V power source.
   c) Insert the remote switch ground wire into Pin 9 of the plug.

SUBTASK 25-62-30-450-004

E. Wiring Installation

1) Route the remote switch harness wire bundle and breakout wiring through the airframe.
2) Route the antenna coax cable through the airframe.

   NOTE: A longer coax cable, up to 20 feet (6.1 m), may be fabricated if the cable provided is too short. Use RG-142 or RG-400 coax cable.

3) Support the wiring and coax cable by clamping or other suitable means, such that the wiring and cables are properly supported and protected from chaffing and strain. Refer to the aircraft manufacturer's written instructions or as described in AC 43.13-1, Chapter 11, § 9 through 12, as applicable.

SUBTASK 25-62-30-450-005

F. Antenna Connection

1) Connect the coax cable to the antenna, making sure the cable is routed and supported such that there is no tensile load (i.e., strain) on the connection.

SUBTASK 25-62-30-450-006

G. Cockpit Remote Switch Power Connection

1) Connect the remote switch power wire. If the wire is spliced, fabricate the splice in a manner acceptable to the aircraft manufacturer or as described in AC 43.13-1, § 13.

   NOTE: The power source provides energy for the remote switch assembly LED, but has no effect on switch functions, as the switch will control the ELT with or without power.

   NOTE: Power should be connected directly to the battery using a 1/2 A in-line, slo-blo fuse or circuit breaker; or an alternate un-switched source, such as the aircraft clock circuitry.

SUBTASK 25-62-30-450-007

H. Remote Switch Alternate Power Source

1) If the aircraft does not have an electrical system (i.e., no battery), it is permissible to fabricate a substitute power source for the LED, as follows:
   a) Connect three suitably supported 9V alkaline batteries together in series.
   b) Connect the positive (+) side to Pin 3 of the remote switch connector.
   c) Connect the negative (–) side to aircraft ground, such that the circuit is complete.
   d) Check the battery voltage periodically and replace the batteries every two years.
   e) Note the alteration in the aircraft logbook.

SUBTASK 25-62-30-450-008

I. Airframe Ground Connections

1) Connect the ground wires to the airframe in accordance with the aircraft manufacturer's written instructions or as described in AC 43.13-1, Chapter 11, § 15, as applicable. See Figure 21 Metal Airframe Wiring Diagrams on page 55 and Figure 22 Composite Airframe Wiring Diagrams on page 56 as appropriate.

SUBTASK 25-62-30-450-009

J. Buzzer Connections

1) Connect the power wire to the buzzer positive (+) terminal.
2) Connect the ground wire to the buzzer negative (–) terminal.

SUBTASK 25-62-30-450-010

K. Remote Switch Final Installation

1) Insert the harness plug into the remote switch receptacle.
2) Install the remote switch assembly in accordance with SUBTASK 25-62-30-450-001 on page 55.

TASK 25-62-30-410-801

7. ELT Installation

SUBTASK 25-62-30-410-001

A. Installation and Test

CAUTION: TAKE CARE TO KEEP THE REMOTE SWITCH PLUG STRAIGHT WHEN CONNECTING IT TO THE ELT. IF THE PLUG IS COCKED (I.E., CROOKED) WHEN INSERTING IT INTO THE ELT RECEPTACLE, THE ELT MAY ACTIVATE. IF THE ELT ACTIVATES, RESET IT BY CYCLING THE LOCAL CONTROL SWITCH TO "ON" AND THEN BACK TO "ARM".

1) See Figure 25 ELT Installation Sequence.

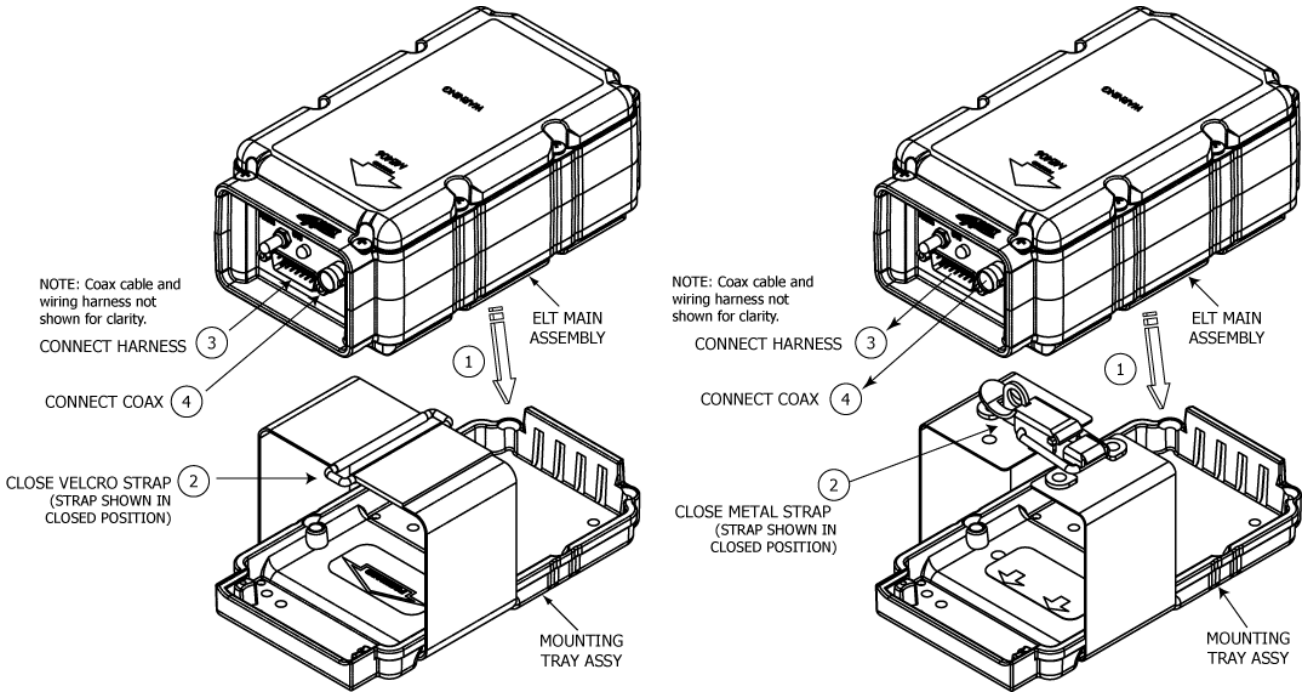

Figure 25 ELT Installation Sequence

2) Verify the ELT local switch is in the "ARM" position.
3) Insert the ELT into the mounting tray at an angle, such that the locking ears at the end opposite the direction-of-flight arrow fit into the mounting tray locking slots.
4) Press the ELT down until it is fully seated in the mounting tray.

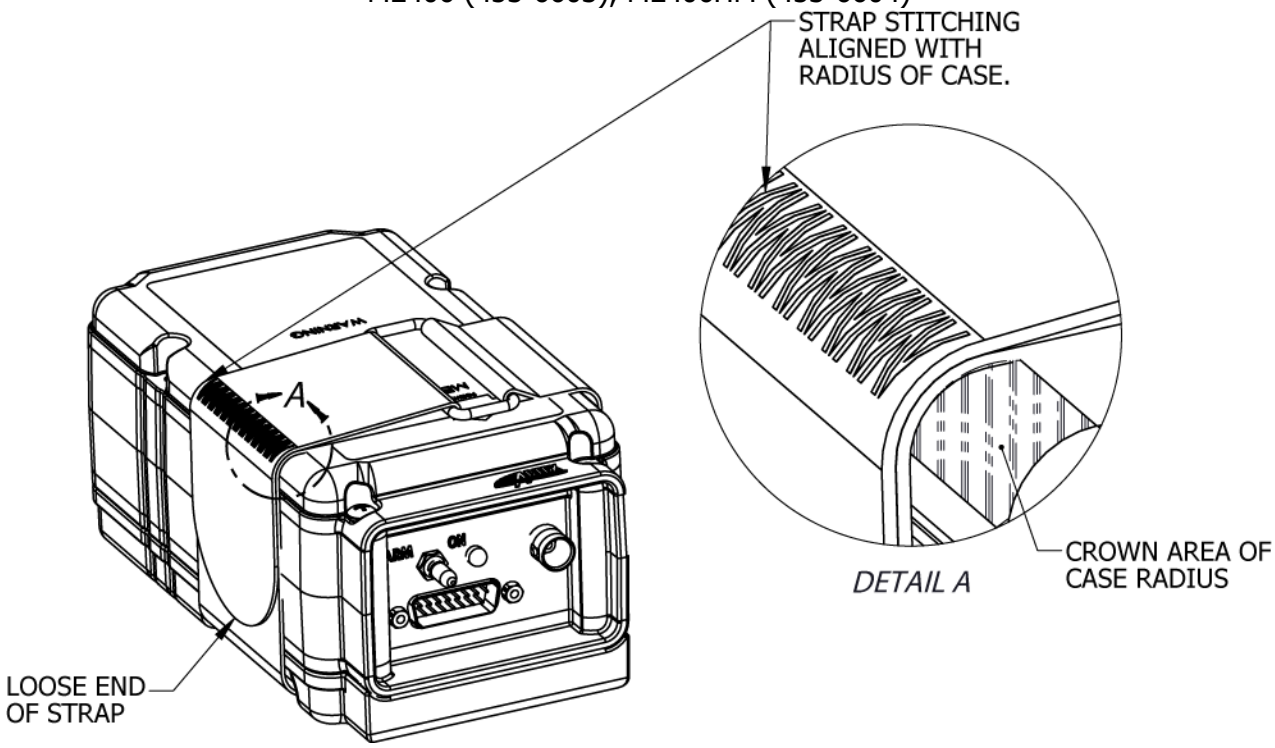

Figure 26 Velcro Strap Installation & Inspection

5) (Velcro Strap Installations Only) Tighten the Velcro strap around the ELT body (see Figure 26 Velcro Strap Installation & Inspection).
    a) Tighten the Velcro strap firmly around the ELT body. Pull loose end of strap with enough force so that the stitched seam is aligned with the crown of the radius of the ELT case (see Detail A). Press and smooth "hook" end of strap firmly into "loop" portion to ensure a tight bond.
    b) Conduct an inspection of the Velcro strap per FAR Part 43, Appendix D. Check strap for proper position and tightness. Check strap for debris that may inhibit the strap from being fully engaged. Also check for cuts, abrasion, or any other damage to the strap. Replace mounting tray assembly with metal strap mounting tray assembly (Artex P/N 452-3034-1) if any parts are damaged or worn.
    c) Repeat steps (a) and (b) each time the ELT is removed and re-installed in the mounting tray.
6) Connect the remote switch harness plug to the ELT, as follows:
    a) Press two sealant strips (850-0814) against the male pins of the ELT receptacle with the tacky side against the pins, while peeling the foam backing off each sealant strip.
        NOTE: Verify sealant strips match the receptacle shape.
        NOTE: Verify the sealant strips are in place on existing installations.
    b) Plug the remote switch harness plug into the ELT receptacle.
    c) Screw the thumbscrews into the ELT receptacle retaining nuts until the plug is seated properly.
7) Connect the antenna coax cable to the ELT.
8) Tie up excess slack in the harness and coax cable, such that they form drip loops.

NOTE: Steps (1) through (7) are applicable any time the ELT has been removed and undergoes reinstallation. Step (8) is only applicable at initial installation or if the wiring or coax cable has been disturbed.

9) Test the ELT installation in accordance with the requirements of SUBTASK 25-62-30-750-012 on page 35.

   NOTE: It is very important the cockpit remote switch LED immediately begins flashing continuously upon ELT activation. If the LED fails to start flashing, recheck the interface wiring and connections between the ELT and the cockpit remote switch.

   NOTE: If verification of the digital message (i.e., 406 MHz burst) is desired, follow the procedures outlined in SUBTASK 25-62-30-750-009 on page 33.

SUBTASK 25-62-30-450-001

B. Harness ELT D-Sub Plug Sealing

1) Seal the D-Sub plug at the ELT end to prevent moisture from penetrating the connection, thus preventing water from beading up and causing bridging between connector pins resulting in possible activation of the ELT. Use the following procedure:

   NOTE: Perform the sealing process once all tests have been satisfactorily completed and all harness connections have been verified to be correct.

   a) Disconnect the remote switch harness D-Sub plug from the ELT.
   b) Separate the D-Sub housing halves.
   c) Inject Dow Corning® 4 Electrical Insulating Compound or an equivalent meeting MIL-S-8660C into the back side of the plug, such that the insulating compound surrounds the D-Sub pin area and covers the back of the plug.
   d) Reinstall the housing halves.
   e) Inject Dow Corning® 4 Electrical Insulating Compound or an equivalent meeting MIL-S-8660C around the male pins of the ELT receptacle.
   f) Connect the remote switch harness plug to the ELT.

SUBTASK 25-62-30-410-002

C. Installation Documentation

1) Make appropriate logbook (i.e., aircraft records) entries and submit FAA Form 337, along with any supporting data required by the FAA for approval of the installation, as applicable.

   NOTE: Refer to TASK 25-62-30-410-801 on page 44 for additional information on installation approvals.

2) In countries other than the United States, make appropriate aircraft records entries and submit documentation as required for installation approval in accordance with national regulatory authorities.

TASK 25-62-30-450-806

8. Battery Pack Installation

SUBTASK 25-62-30-450-001

A. Battery Reinstallation

CAUTION: THE BATTERY PACK CONTAINS ELECTROSTATIC DISCHARGE SENSITIVE (ESD) COMPONENTS AND IT MUST BE HANDLED WITH CARE. IF POSSIBLE, WEAR A GROUNDED WRIST STRAP WHEN HANDLING THE BATTERY PACK DURING INSTALLATION ACTIVITIES. TAKE PARTICULAR CARE TO AVOID TOUCHING THE EXPOSED CIRCUIT BOARD AND CONNECTOR PINS ON THE BOARD.

1) This subtask applies to reinstallation of an existing battery that was removed for inspection and testing.

2) See Figure 27 Battery Pack Installation.

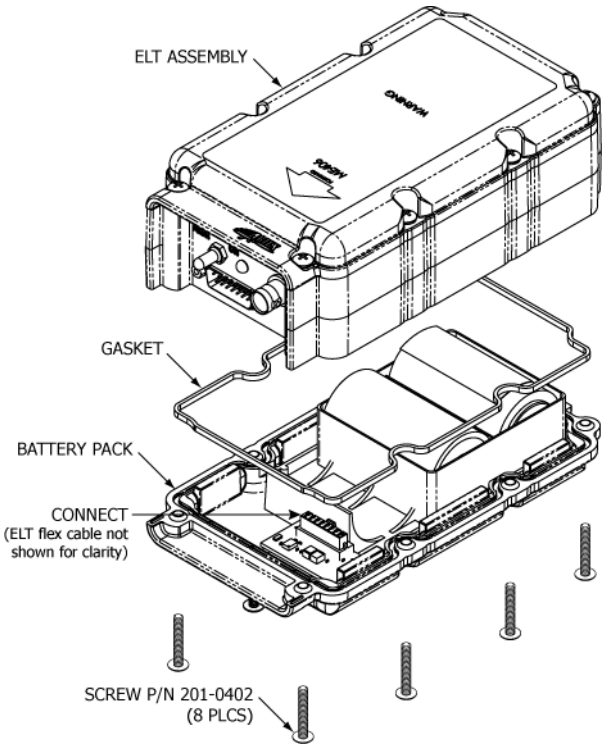

Figure 27 Battery Pack Installation

3) Verify the gasket is in place and in good condition.
4) Lay the battery pack on the work surface with the cells facing up.
5) Align the ELT with the battery pack, holding it slightly above the pack with one hand.
6) Connect the ELT flex cable receptacle to the plug on the battery pack circuit board using the other hand, taking care not to put a twist in the flex cable.

   NOTE: The receptacle should "click" into place when properly mated to the plug.
7) Reset the ELT by toggling the ELT local control switch to "ON" and back to "ARM" after 1-2 seconds, if the ELT activates.

   NOTE: This step may be necessary because the ELT will occasionally activate when power is connected to it in Step 6.
8) Fit the battery pack into place on the ELT, making sure the gasket is positioned correctly.
9) Turn the battery pack bottom face up to facilitate installing the screws, while securely holding the ELT and battery pack together.
10) Install the eight battery pack retaining screws and tighten until the ELT is snug against the gasket.
11) Torque the screws to 10-12 lb-in (113-136 N•cm).
12) Perform an ELT self-test as follows:
    a) Set the ELT local control switch in the "ON" position. The LED will begin flashing every 3-4 seconds.
    b) Return the switch to the "ARM" position after 1-2 seconds. If the ELT is working properly, the LED will stay on for approximately 1 second. The ELT may flash the following expected error codes, which should be ignored.
        1. 3-flash and 4-flash errors, which are generated because the ELT is not installed and connected to an antenna, etc.

2. A 5-flash error will be indicated if the ELT is programed with a location protocol, and is generated because the ELT is not connected to the navigation system and receiving position data.
3. A 6-flash error will indicate the G-Switch loop between pins 5 and 12 on the D-Sub connector is open or not installed.

c) If a 7-flash error code is indicated, there is a problem with the battery or battery connection wiring. Refer to Table 6 on page 38.

SUBTASK 25-62-30-450-002

B. New Battery Installation

CAUTION: DO NOT USE CONTACT CLEANER ON ELT COMPONENTS. SUCH CHEMICAL AGENTS CAN BE HIGHLY DESTRUCTIVE TO THE MOUNTING HARDWARE AND ELT HOUSING, CAUSING CRACKING, FRACTURING AND OTHER DAMAGE.

1) This subtask applies to installation of a new (i.e., replacement) battery.
2) Verify the bottom of the ELT is clean and free of battery corrosion residue. Clean as necessary.
3) Install the new gasket in the battery pack sealing groove.
4) Perform Steps (4) through (12) of the procedure outlined in SUBTASK 25-62-30-450-001 on page 63.
5) Place the duplicate copy of the battery expiration date label on the ELT in a location where it is visible when the ELT is installed in the mounting tray.

   NOTE: The label is supplied with the new battery pack.
6) Enter the pertinent battery replacement information in the logbook (i.e., aircraft records) and fill out any other required documentation.

TASK 25-62-30-410-803

9. Helicopter Installations - Special Considerations

SUBTASK 25-62-30-990-001

A. Background

1) There are few guidelines, aside from experience, regarding the best way to mount an ELT in helicopters.
2) Before the availability of multi-axis G-switch modules, manufacturers advised installing ELTs with the sensitive axis pointing approximately 45° downward from the normal forward direction of flight.
   a) This mounting attitude was adapted due to a combination of the directional sensing limitations of a single-axis G-switch and the flight characteristics of helicopters.
   b) Mounting the ELT in this attitude and orientation is currently specified by CAR, Part 5, Subpart 551.104.
   c) Experience has indicated this mounting angle tends to preload the G-switch and "nuisance" activation can occur as a result of severe aircraft maneuvers, and abrupt takeoffs and landings.
3) ACR Electronics does not recommend installing ELTs designed with a single-axis G-switch in helicopters due the limitations and issues cited above.

SUBTASK 25-62-30-990-002

B. Recommendations

1) ACR Electronics recommends installation of the ME406HM ELT in helicopters. The ME406HM ELT is equipped with a 5-axis G-switch module in addition to the usual primary G-switch, which is oriented to the direction of flight. See Figure 28 ELT Orthogonal Axes.

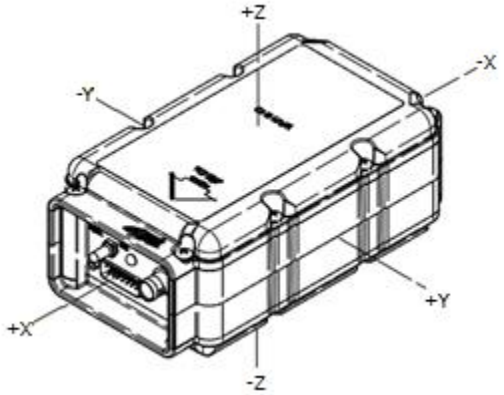

Figure 28 ELT Orthogonal Axes

2) The six-axis coverage of the ME406HM design accommodates the flight characteristics of helicopters, while allowing "normal" installation and eliminating or significantly reducing "nuisance" ELT activations.

SUBTASK 25-62-30-410-001

C. Orientation

1) Mount the ME406HM ELT parallel to the waterline of the fuselage, along the longitudinal axis, with the direction-of-flight arrow on the ELT pointing forward.

   NOTE: This is the orientation of the primary G-switch in the ELT.

2) The ELT may be oriented on any of its horizontal axes in 90° increments.

   NOTE: Ensure that the front of the ELT is aligned with the nose of the aircraft with no more than 5° deflection in any direction to ensure proper operation of the 6-axis G-Switch sensors.

3) All other installation requirements contained herein are applicable and must be adhered to.

TASK 25-62-30-990-801

1. Background Information

SUBTASK 25-62-30-990-001

A. Hex ID Code

1) Each 406 MHz ELT is programmed with a unique hex ID code (i.e., registration code) that is transmitted to the SAR satellite system. At a minimum, this code provides information regarding:
   a) Unique aircraft or ELT identification,
   b) Country of origin, and
   c) Latitude and longitude position data, if equipped with a navigation interface device.

SUBTASK 25-62-30-990-002

B. Reason for Registration

1) ELT registration aids the Rescue Coordination Center (RCC) in determining if an actual emergency exists by accessing a database containing the registration information, which facilitates inquiries as to the whereabouts of the aircraft, existence of a flight plan, etc.
   a) Owner's name,
   b) Address,
   c) Telephone number,
   d) Aircraft type, and registration number.

SUBTASK 25-62-30-990-003

C. Registration Information Resources

1) Refer to COSPAS-SARSAT documents G.005 and S.007 for information regarding ELT programming and registration. These documents are available at www.cospas-sarsat.org.

TASK 25-62-30-990-802

2. Registration

SUBTASK 25-62-30-990-001

A. Responsibility

1) It is the responsibility of the aircraft owner to register the ELT.
   a) If an ELT is moved to a different aircraft (i.e., an aircraft other than the one it was originally installed on), and/or the aircraft is registered in a new country, the ELT must be re-registered.
   b) If the aircraft is registered in a new country, the ELT must be re-registered.
   c) The product label must re-marked with the new HEX ID code to indicate new programming, if applicable.

SUBTASK 25-62-30-990-002

B. Required Information

1) The following information is required when registering an ELT:

a) The unique Hex ID code printed on the ELT product label,

b) The information listed in SUBTASK 25-62-30-990-002 on page 67.

2) The information (i.e., address, telephone number, etc.), filed as part of the registration process, should be kept up to date.

SUBTASK 25-62-30-990-003

C. Where to Register

1) In the United States, the National Oceanic and Atmospheric Administration (NOAA) is the registration agency.

2) Specific registration web sites and information may be found at:

a) The Artex products web site at www.acrartex.com, which has links to on-line registration sites and also a link to registration forms and instructions for a number of countries.

b) An ELT may also be registered in the United States by going directly to the NOAA ELT registration web site at www.beaconregistration.noaa.gov.

NOTE: NOAA may also be contacted by mail at SARSAT Beacon Registration, NSOF, E/SPO53 1315 East West Hwy, Silver Spring, MD 20910-3282, or by phone at 1-888-212-7283 or 301-817-4565.

3) In other countries, the national civil aviation authority in the applicable country should be contacted to obtain registration information.

TASK 25-62-30-990-801

1. Introduction

SUBTASK 25-62-30-990-001

A. Purpose

1) This illustrated parts list (IPL) illustrates and lists the spare parts, with attaching hardware, applicable to the ME406 Series ELT.
2) Parts and components not listed herein, are not field replaceable and ELT repairs requiring parts outside the scope of this manual must be accomplished by the manufacturer.

SUBTASK 25-62-30-990-002

B. IPL Usage Guide

1) If the part number is not known:
   a) Find the part in the IPL Figure illustration.
   b) Note the item number assigned to the part.
   c) Refer to the associated parts list and find the item number in the "Fig # & Item" column.
2) If the part number is known:
   a) Refer to the parts list and find the part in the "Part #" column.
   b) Note the figure number and item number assigned to the part.
   c) Refer to the illustration in the applicable IPL figure to find attaching hardware and related assembly parts.
3) In cases where multiple item numbers are shown on an illustration for the same item, there is more than one part number option associated with that item.

TASK 25-62-30-990-802

2. Manufacturer Name and Address

SUBTASK 25-62-30-990-001

A. Ordering Information

1) Approved parts may be ordered from ACR Electronics, or any authorized dealer.

CONTACT INFORMATION

Sales, ACR Electronics, Inc. / Artex Products

5757 Ravenswood Rd

Fort Lauderdale, FL 33312-6645 USA

Phone: (954) 981-3333

Fax: (954) 983-5087

TASK 25-62-30-990-803

3. Explanation of Detailed Parts List Entries

SUBTASK 25-62-30-990-001

A. Fig # & Item Column

1) The first number at the top of the column is the figure number of the corresponding illustration.
2) The right hand number is the item number in the associated figure.
3) A dash (–) in front of an item means the part is not illustrated.
4) Alpha-variants A through Z (except I and O) are assigned to item numbers, when necessary to identify added parts, alternate parts, and service bulletin modified parts.

SUBTASK 25-62-30-990-002

B. Part # Column

1) This column contains the manufacturer's part number for each part.

SUBTASK 25-62-30-990-003

C. Nomenclature Column

1) This column contains descriptive nomenclature for each part, service bulletin numbers affecting the part, and obsolete part numbers.
2) The indenture system used in the "Nomenclature" column indicates the relationship of one part to another, as follows:

1 2 3

End Item or Major Assembly

ATTACHING PARTS

Attaching Parts for End Item or Major Assembly

***

. Detail Parts for End Item or Major Assembly

. Subassemblies

ATTACHING PARTS

. Attaching Parts for Subassemblies

***

. . Detail Parts for Subassemblies

ATTACHING PARTS

. . Attaching Parts for Detail Parts

***

3) Assemblies, subassemblies, and detail parts subject to modification, deletion, addition, or replacement by an issued service bulletin, are annotated to indicate both pre- and post-service bulletin configurations. The term (PRE SB 2828) in the "Nomenclature" column designates the original configuration, and the term (POST SB 2828) identifies assemblies and parts after the modification has been completed.
4) The terms defined below are used when applicable to indicate the interchangeability of parts.

TERM	ABBREVIATION	DEFINITION
Alternate	ALT	The listed part is alternate to, and interchangeable with, other parts within the same item number variant group or other item numbers if designated.
Superceded By	SUPSD BY	The part is replaced by and is not interchangeable with the item number designated in the notation.
Supersedes	SUPSDS	The part replaces and is not interchangeable with the item number designated in the notation.
Replaced By	REPLD BY	The part is replaced by and is interchangeable with the item number designated in the notation.
Replaces	REPLS	The part replaces and is interchangeable with the item number designated in the notation.

SUBTASK 25-62-30-990-004

D. UPA (Units Per Assembly) Column

1) The quantity shown in this column represents the units required for one next higher assembly or, when referring to attaching parts, the quantity to attach one such item.
2) The abbreviation RF (reference) indicates the end item assembly is listed for reference purposes.

TASK 25-62-30-990-804

4. Detailed Parts List

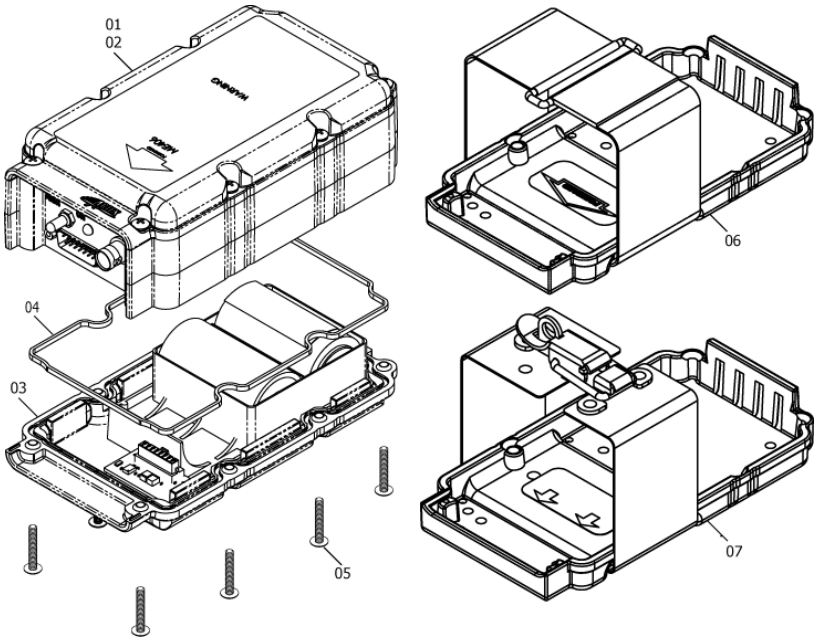

Figure 29 ME406 Series ELT Main Assembly and Installation

FIG #	ITEM	PART #	1234 NOMENCLATURE	UPA
27	01	453-6603	ME406 Main Assembly	1
	02	453-6604	ME406HM Main Assembly	1
			***	
	03	452-6499	. ME406 Lithium Battery Pack	1
	04	183-0050	. Gasket, 0.093” x 0.055”	1
			ATTACHING PARTS	
	05	201-0402	. Screw, 6-32x7/8, PHIL, TRUSS, S/S	8
			***	
	06	452-3034	Mounting Tray Assembly	1
	07	452-3034-1	Mounting Tray Assembly	1
			ATTACHING PARTS	
	–	201-0810	Screw, PHIL 8-32 x 5/8” SS	4
	–	246-0008	Washer, Flat 1/2” SS #8	4
	–	241-0832	Nut, Hex 8-32 x 1/4” SS	4
			***	
	–	591-0999-01	. Label, ME406 Country/Hex ID	1
	–	591-0429	. Label, Country Code	1

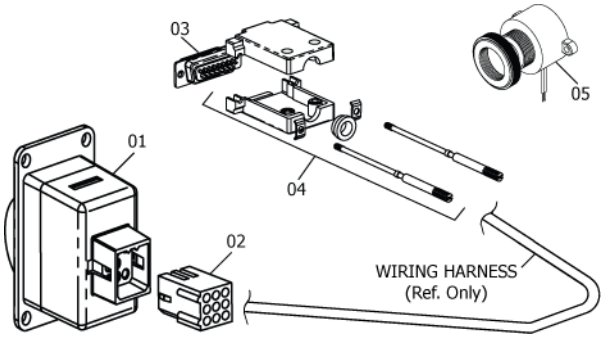

Figure 30 Electrical Components

FIG #	ITEM	PART #	1234 NOMENCLATURE	UPA
28	01	345-6196-04	Switch, Cockpit Remote	1
			ATTACHING PARTS	
	–	201-0408	Screw, PHIL 4-40 x 1/4” SS	4
	–	247-0400	Washer, Internal Lock SS #4	4
	–	241-0440	Nut, 4-40 x 1/4” Hex SS	4
			***	
	–	591-0428	. Label, ELT Cautionary Use Advisory	1
			***	
	02	151-5009	Plug, 9-Pin	1
			***	
	–	151-6628	. Terminal, Crimp Female 0.062 Dia.	9
			***	
	03	150-1130	Connector, D-Sub, 15-Pin, Female, Solder Contacts	1
	04	150-1127	Housing, D-Sub, 15-Pin, Grommet., Thumbscrews	1
			***	
	–	850-0814	. Sealant Strip, D-Sub Connector	2
			***	
	05	452-6505	Buzzer (ELT Audible Alert)	1

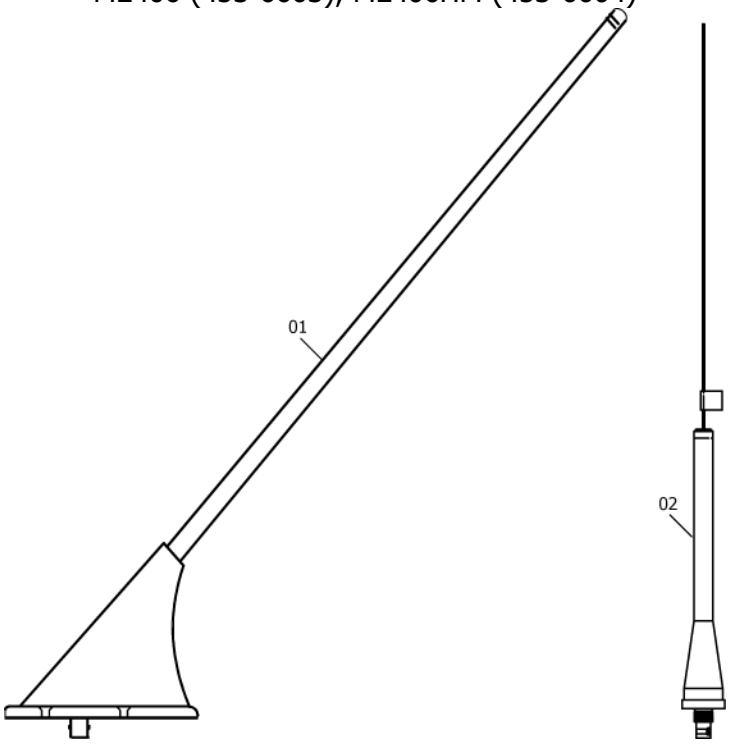

Figure 31 Antennas

FIG #	ITEM	PART #	1234 NOMENCLATURE	UPA
29	01	110-338	Antenna, Tri-Band CI317-1 (Single Input)	1
	02	110-773	Antenna, 121.5/406 MHz Whip	1
			***	
	–	611-6013-04	. Cable, Coax BNC to BNC (6 ft.)	1
			***	