B406-4
Emergency Locator Transmitter

Description, Operation, Installation and Maintenance Manual

This manual includes data for the equipment that follows:

Component	**Part No.**	**Model No.**
Emergency Locator Transmitter	453-5004	B406-4

MAY 20/2026
570-5004 Rev. Y
Initial Issue DEC 02/1999

25-62-03

ARTEX PRODUCTS / ACR ELECTRONICS, INC.
5757 Ravenswood Rd, Ft. Lauderdale, FL 33312
Cage Code: 18560

NOTICES

THE INFORMATION CONTAINED HEREIN IS NOT PROPRIETARY.

Information in this manual is subject to change without notice. ACR Electronics makes no warranty, expressed or implied, with regard to this manual, including but not limited to any implied warranties of merchantability, fitness for a particular purpose, and non-infringement. In addition, ACR Electronics makes no warranty with regard to the documentation or data contained herein. ACR Electronics is not liable in the event of incidentals, special, consequential, or any other damages in connection with or arising from furnishing, performance, or use of this manual.

For further information contact Sales, ACR Electronics, 5757 Ravenswood Rd, Fort Lauderdale, FL 33312. Telephone (954) 981-3333.

AIRWORTHINESS LIMITATIONS

The Airworthiness limitations section is FAA approved and specifies inspections and other maintenance required under 14 CFR§ 43.16 and 91.403, unless an alternative program has been approved.

IMPORTANT NOTICE

ACR Electronics will be responsible for full distribution and revisions of ICA's (Instructions for Continued Airworthiness). For inquiries regarding the content and currency of this manual, contact ACR Electronics, 5757 Ravenswood Rd, Fort Lauderdale, FL 33312. Telephone (954) 981-3333.

RECORD OF REVISIONS

REVISION	CHANGE	DATE	REVISION	CHANGE	DATE
-	RELEASE	Dec 02/1999	P	ECO 17212	Feb 7/2020
A	ECO 1418	Jun 22/2000	R	ECO 17261	Apr 7/2020
B	DCN 1641	Apr 11/2001	U	ECO 17300	May 28/2020
B	DCN 1747	Jul 19/2001	V	ECO 18023	Jul 13/2023
B	DCN 1965	Apr 04/2002	W	ECO 18264	Oct 16/2024
B	DCN 2115	Dec 10/2002	Y	ECN 19058	May 20/2026
B	DCN 2356	Feb 11/2004			
C	DCN 2968	Mar 20/2007			
C	DCN 3174	Feb 26/2008			
C	DCN 3282	Aug 25/2008			
D	DCA W9414	Apr 06/2010			
E	ECO 14756	Jul 28/2011			
F	ECO 15177	Aug 27/2012			
G	ECO 15330	Mar 1/2013			
H	ECO 15410	Jun 20/2013			
J	ECO 15510	Oct 14/2013			
K	ECO 15830	Dec 01/2014			
L	ECO 16361	May 11/2016			
M	ECO 16887	Mar 30/2018			
N	ECO 17024	Feb 28/2019			

SERVICE BULLETIN LIST

SERVICE BULLETIN NO	ISSUE DATE	SUBJECT	MANUAL REV NO	MANUAL REV DATE

LIST OF EFFECTIVE PAGES

SUBJECT	PAGE	DATE	SUBJECT	PAGE	DATE
Title Page	1	May 20/26	Test and Fault Isolation (cont)	37	May 28/20
Notices	2	May 28/20		38	May 28/20
Record of Revisions	3	May 20/26		39	May 28/20
Service Bulletin List	4	May 28/20	Removal	40	May 28/20
List of Effective Pages	5	May 20/26		41	May 28/20
Table of Contents	6	May 28/20		42	May 28/20
	7	May 28/20	Installation	43	May 28/20
	8	May 28/20		44	May 28/20
List of Figures	9	May 28/20		45	May 28/20
Introduction	10	May 28/20		46	May 28/20
	11	Jul 13/23		47	May 28/20
	12	May 28/20		48	May 28/20
	13	May 28/20		49	May 28/20
	14	May 28/20		50	May 28/20
	15	May 28/20		51	May 28/20
	16	May 28/20		52	May 28/20
Description and Operation	17	May 28/20		53	May 28/20
	18	May 28/20		54	May 28/20
	19	May 28/20		55	May 28/20
	20	May 28/20		56	May 28/20
	21	May 28/20		57	May 28/20
	22	May 28/20		58	May 28/20
	23	May 28/20		59	May 28/20
	24	May 28/20		60	May 28/20
	25	May 28/20		61	May 20/26
Test and Fault Isolation	26	May 28/20		62	May 20/26
	27	May 28/20	Appendix A	63	May 20/26
	28	May 28/20		64	May 28/20
	29	Oct 16/24	Illustrated Parts List	65	May 28/20
	30	May 28/20		66	May 28/20
	31	May 28/20		67	May 28/20
	32	Jul 13/23		68	May 28/20
	33	May 28/20		69	May 28/20
	34	May 28/20		70	May 28/20
	35	May 28/20		71	May 28/20
	36	May 28/20		72	May 28/20

TABLE OF CONTENTS

RECORD OF REVISIONS 3

SERVICE BULLETIN LIST 4

LIST OF EFFECTIVE PAGES 5

TABLE OF CONTENTS 6

LIST OF FIGURES 9

INTRODUCTION 10
1. Manual Usage 10
   A. General 10
   B. Application 10
2. Model Description 11
   A. B406-4 11
3. Approvals 11
   A. B406-4 11
   B. Battery 11
   C. RTCA DO-160D Compliance 11
4. Frequency Allocations 13
   A. Application 13
   B. Discussion 13
5. List of Acronyms, Abbreviations, and Definitions 14
6. References 16
   A. Regulatory Documents 16
   B. Other Documents 16

DESCRIPTION AND OPERATION 17
1. Description 17
   A. Functional Overview 17
   B. Components 18
2. Operation 21
   A. Operational Overview 21
   B. Normal Operation 22
   C. Manual Activation 22
   D. ELT Reset 22
   E. Functional Check 22
3. Specifications 23
   A. Environmental and Physical 23
   B. Electrical 24
   C. Antennas 25

TEST AND FAULT ISOLATION 26
1. Inspection and Test Regulatory Requirements 26
   A. United States 26
   B. Canada 26
   C. Other Countries 26

2. Inspection and Test Procedures 27
   A. Checklist 27
   B. Preparation 29
   C. Coax Cables and Wiring Connections Inspection – Item 1 29
   D. Mounting Tray and Hardware Inspection – Item 2 29
   E. Battery Pack Inspection – Item 3 29
   F. G-Switch Functional Check – Item 4a 30
   G. G-Switch Functional Check (Helicopter Models Only)– Item 4b 30
   H. Performance Testing Setup 31
   I. 121.5 MHz Frequency Measurement – Item 5a 32
   J. Audio Modulation Check – Item 5b 32
   K. 121.5/243.0 MHz Power Output Measurement – Item 5c 32
   L. 406 MHz Frequency Measurement – Item 5d 32
   M. 406 MHz Power Output Measurement – Item 5e 33
   N. Current Draw Test – Item 5f 33
   O. Digital Message Verification – Item 5g 34
   P. ELT Reset Check – Item 5h 35
   Q. Installed Transmitter Test – Item 6 35
   R. Antenna Test – Item 7 36
   S. Inspection and Test Documentation – Item 8 36
3. Troubleshooting 37
   A. Self-Test Error Troubleshooting Guidelines 37
   B. ELT Troubleshooting Guidelines 39

REMOVAL 40
1. ELT 40
   A. ELT Removal 40
2. Battery 41
   A. Battery Pack Removal 41
3. Material or Equipment Return 42
   A. Shipment Information 42
   B. Return Material Authorization 42

INSTALLATION 43
1. Regulatory Requirements and Guidelines 43
   A. For US Registered aircraft: 43
   B. TSO C126, Paragraph D 43
   C. FAA 43
   D. Canada 44
   E. Other Countries 44
   F. RTCA 44
2. Mounting Tray 45
   A. Location 45
   B. Installation 46
3. Antenna 47
   A. Selection 47
   B. Location 47
   C. Installation 47
4. Remote Switch Panel 51
   A. Location 51
   B. Installation 51

5. Buzzer 52
   A. Location 52
   B. Installation 52
6. Wiring 53
   A. General Considerations and Recommendations 53
   B. Remote Switch Panel Harness Fabrication and Installation 53
   C. Buzzer Wiring Fabrication 56
   D. ELT 12-Pin Receptacle Wiring Fabrication and Installation 56
   E. Coax Cables Installation 57
   F. Antenna Connections 58
   G. Airframe Ground Connections 58
   H. Buzzer Connections 58
   I. Remote Switch Panel Final Installation 58
7. ELT Installation 59
   A. Installation and Test 59
   B. Harness ELT Receptacle Sealing 60
   C. Installation Documentation 60
8. Battery Pack Installation 61
   A. Battery Reinstallation 61
   B. New Battery Installation 63

APPENDIX A – ELT REGISTRATION 64
1. Background Information 64
   A. Hex ID Code 64
   B. Reason for Registration 64
   C. Registration Information Resources 64
2. Registration 65
   A. Responsibility 65
   B. Required Information 65
   C. Where to Register 65

ILLUSTRATED PARTS LIST 66
1. Introduction 66
   A. Purpose 66
   B. IPL Usage Guide 66
2. Manufacturer Name and Address 66
   A. Ordering Information 66
3. Explanation of Detailed Parts List Entries 67
   A. Fig # & Item Column 67
   B. Part # Column 67
   C. Nomenclature Column 67
   D. UPA (Units Per Assembly) Column 68
4. Detailed Parts List 69

LIST OF FIGURES

Figure 1 B406-4 ELT and Mounting Frame Assembly 18
Figure 2 Remote Switch Panel Assembly Front View 18
Figure 3 Buzzer 19
Figure 4 Battery Pack Assembly 19
Figure 5 Antennas 20
Figure 6 ELT Operational Flow Diagram 21
Figure 7 ELT Orthogonal Axes 31
Figure 8 Performance Testing Equipment Setup 32
Figure 9 Current Draw Test Setup 34
Figure 10 Short and Long 406 MHz Message Examples 35
Figure 11 ELT Removal Sequence 40
Figure 12 Battery Pack Removal 41
Figure 13 B406-4 ELT Outline and Dimensions 45
Figure 14 Typical Mounting Tray Installation 46
Figure 15 Rod Antenna 110-320 and Blade Antenna 110-328-01 Outlines and Dimensions 48
Figure 16 Blade Antennas 110-333 and 110-337 Outlines and Dimensions 49
Figure 17 Blade Antenna 110-337-11 Outline and Dimensions 50
Figure 18 Remote Switch Panel Assembly Outline and Dimensions 51
Figure 19 Buzzer Outline and Dimensions 52
Figure 20 Remote Switch Panel Harness Wiring Diagram 54
Figure 21 Remote Switch Panel Harness Wiring at ELT End 57
Figure 22 ELT Installation Sequence 59
Figure 23 Battery Pack Installation 61
Figure 24 Battery Pack Retaining Screw Tightening Pattern 62
Figure 25 B406-4 ELT Main Assembly and Installation 69
Figure 26 Electrical Components 71
Figure 27 Antennas 72

INTRODUCTION

TASK 25-62-03-990-801

1. Manual Usage

SUBTASK 25-62-03-990-001

A. General

1) This manual describes the operation, installation, and maintenance of the Model B406-4 emergency locator transmitter (ELT). The information is provided to ensure initial and continued airworthiness. Information presented in this manual is accurate at time of printing, but is subject to change. Refer to the Artex products web site at www.acrartex.com for the latest information and any updates to this manual.
2) Information on COSPAS-SARSAT emergency locator beacon registration requirements and procedures is provided in Appendix A – ELT Registration on page 64.
3) Web links provided in this manual were accurate at time of printing but may be subject to change.
4) ACR Electronics reserves the right to add approved components to the ELT system; including, but not limited to antennas, remote switch panels, and coaxial cables.
5) Regulatory references contained herein are generally confined to United States and Canadian requirements and, in any case, should not be considered all encompassing. Consult your national aviation authority for applicable requirements.

SUBTASK 25-62-03-990-002

B. Application

1) This manual constitutes supporting data/documentation for the B406-4 ELT, including:
   a) Description and Operation
   b) Test and Fault Isolation (includes inspection criteria)
   c) Removal
   d) Installation
   e) Registration
   f) Illustrated Parts List
2) In the United States, the B406-4 ELT must be installed and maintained in accordance with the requirements herein and 14 CFR, FAR Parts 43, and 91; and other airworthiness requirements, as applicable.
3) In Canada, the B406-4 ELT must be installed and maintained in accordance with the requirements herein and Canadian Aviation Regulations (CAR), Part V, Paragraph 551.104 and other CAR airworthiness requirements, as applicable.
4) B406-4 ELT installation and maintenance in all other countries must comply with the requirements herein and applicable national airworthiness requirements.
5) The accessories (i.e., remote switch panel and antennas) addressed in this manual are the accessories most commonly associated with the B406-4 ELT. Other options, such as a different remote switch panel configuration or an ELT/NAV Interface -B, should be installed and maintained in accordance with the written instructions specific to the accessory.

   NOTE: Contact ACR Electronics for optional accessories approved for use with the B406-4 ELT.
6) To ensure proper operation, only parts listed in the Illustrated Parts List of this manual or those recommended by ACR Electronics may be used as replacement parts for the B406-4 ELT.

TASK 25-62-03-990-802

2. Model Description

SUBTASK 25-62-03-990-001

A. B406-4

1) The B406-4 is a type AF (Automatic Fixed) ELT, which transmits on 121.5, 243.0, and 406 MHz.
2) The ELT is enclosed within a multi-piece mounting frame consisting of a mounting tray assembly, protective top cover assembly and mounting frame cap assembly.
3) When ordered as a system, an installation kit, cockpit remote switch panel, coax cables, audible buzzer, and dual input antenna are provided.

TASK 25-62-03-990-803

3. Approvals

SUBTASK 25-62-03-990-001

A. B406-4

1) FAA TSO C126, Type AF
   a) The conditions and tests required for TSO approval of this article are minimum performance standards. It is the responsibility of those installing this article either on or within a specific type or class of aircraft to determine that the aircraft installation conditions are within TSO standards. TSO articles must have separate approval for installation in an aircraft. The article may be installed only if performed under 14 CFR Part 43 or the applicable airworthiness requirements.
2) Transport Canada - Type Certificate Data Sheet AP-47 Issue 2
3) Industry Canada - Certification Number 1215873110AF
4) JTSO-2C126
5) COSPAS-SARSAT - Certificate No. 112 or 170

SUBTASK 25-62-03-990-002

B. Battery

<u>CAUTION</u>: LITHIUM BATTERY SAFETY CONCERNS INCLUDE THE POSSIBILITY OF FIRE, VENTING VIOLENTLY, AND VENTING OF TOXIC GASES.

1) The lithium battery pack used on the B406-4 ELT is certified under TSO C142.
   a) The conditions and tests required for TSO approval of this battery are minimum performance standards. It is the responsibility of those desiring to install this battery in a specific type or class of aircraft to determine that the aircraft installation conditions are within the TSO standards. The battery may be installed only if further evaluation by applicant documents an acceptable installation and is approved by the Administrator.

SUBTASK 25-62-03-990-003

C. RTCA DO-160D Compliance

1) DO-160D Environmental Categories: C1-BA204XRXXXXXZAZZ204BXXX
2) The DO-160D environmental categories breakdown is detailed in Table 1 on page 12.

CATEGORY	SECTION	DESCRIPTION
C1	4.0	Temperature/Altitude
-	4.5.4	In-Flight Loss of Cooling
B	5.0	Temperature Variation
A	6.0	Humidity
204	7.0/8.0	Operational Shock and Crash Safety/Vibration
X	9.0	Explosion
R	10.0	Waterproofness
X	11.0	Fluids Susceptibility
X	12.0	Sand and Dust
X	13.0	Fungus
X	14.0	Salt Spray
X	15.0	Magnetic Effect
Z	16.0	Power Input
A	17.0	Voltage Spike
Z	18.0	Audio Frequency Susceptibility
Z	19.0	Induced Signal Susceptibility
204	20.0	Radio Frequency Susceptibility
B	21.0	Emission of RF Energy
X	22.0	Lightning
X	23.0	Lightning Direct Effects
X	24.0	Icing

Table 1 Environmental Categories Breakdown

TASK 25-62-03-990-804

4. Frequency Allocations

SUBTASK 25-62-03-990-001

A. Application

1) This section addresses the 406.0-406.1 MHz transmitter window and the specific frequency band allocations residing above 406.025 MHz, beginning with 406.028 MHz, which are assigned or reserved within the 406.0-406.1 MHz distress frequency window.

SUBTASK 25-62-03-990-002

B. Discussion

1) The 406 MHz transmitter frequency of the B406-4 ELT was originally 406.025 MHz. In order to comply with COSPAS-SARSAT frequency allocation requirements, changes to the 406 MHz frequency may occur since the original release of this product.
2) While the original B406-4 ELTs covered by this manual transmit on 406.025 MHz, current B406-4 ELTs may not. The product identification label on each ELT specifies the transmitting frequencies of the individual ELT. The 406 MHz component may be 406.025, 406.028, 406.037 MHz, etc. Allocation of frequencies, based on beacon population per specified frequency band, is controlled by COSPAS-SARSAT.
3) The frequency references throughout this manual for the 406 MHz component should be considered the baseline and the specific frequency indicated on the ELT product label should be substituted if it differs from 406.025 MHz.

TASK 25-62-03-990-805

5. List of Acronyms, Abbreviations, and Definitions

SUBTASK 25-62-03-990-001

Term	Definition
AC	Advisory Circular – A Federal Aviation Administration (USA) bulletin with special information. For the purposes of this document, the acronym AC does not refer to electrical alternating current.
AWG	American Wire Gauge – An electrical wire diameter standard. Look for this acronym in front of or following a wire size number.
BNC Connector	A very common type of coax cable connector having a 50 Ω impedance and used for RF signal connections.
CAR	Canadian Aviation Regulations – The rules and regulations governing the manufacture, certification, operation, maintenance, and alteration of aircraft in Canada.
CFR	Code of Federal Regulations – The general and permanent rules published in the Federal Register by the executive departments and agencies of the Federal Government. Title 14, "Aeronautics and Space" contains the FARs.
Container	The term "Container", within the context of this document, refers to a device designed to suppress RF signals, such that the broadcast of an ELT placed in the container cannot reach the SAR satellite system.
COSPAS-SARSAT	The international search and rescue consortium that governs the international satellite-based search and rescue distress alert detection and information distribution system. For a complete description go to the official web site for the International COSPAS-SARSAT Program.
DER	Designated Engineering Representative – An individual qualified and designated by the FAA to approve, or recommend approval, of technical data to the FAA.
Drip Loop	Extra wire length used to form a U-shaped bend in a wire or cable. Water or other fluids will flow down to the bottom of the loop and drip off. Electrical connections are made at the top of the loop.
ELT	Emergency Locator Transmitter – ELTs are installed on aircraft and used to send emergency signals to the SAR satellite system. The word "Beacon" is associated with these devices.
EMI	Electromagnetic Interference – An undesirable disturbance that affects an electrical circuit due to either electromagnetic conduction or electromagnetic radiation emitted from an external source. Also called radio frequency interference or RFI.
Eurocae	European Organization for Civil Aviation Equipment – EUROCAE documents are widely referenced as a means of compliance to European Technical Standard Orders (ETSOs) and other regulatory documents.
FAA	Federal Aviation Administration – The United States government agency for aircraft safety and regulation.
FAR	Federal Aviation Regulations – The rules and regulations governing the manufacture, certification, operation, maintenance, repair, and alteration of aircraft in the United States.
Form 337	FAA Form 337 is required anytime a major repair and/or major alteration is performed on an aircraft. Refer to FAR, Part 43, Appendix A and the definitions of Major Repair/Alteration contained in FAR, Part 1 for guidance.
FSDO	Flight Standards District Office – FAA district offices responsible for aircraft certification, operation, maintenance, and modification issues, approvals and enforcement.

G-Switch	A velocity switch that detects sudden de-acceleration and is used to automatically activate an ELT. May also be referred to as a "crash sensor".
LED	Light Emitting Diode – Semiconductor device that emits light when current is passed through it. Usually used as a status or warning indicator.
MIL	The three-letter acronym that stands for "Military" and proceeds military specifications and standards numbers (e.g., MIL-W-2828 would indicate a wire specification and MIL-STD-2828 would indicate a standard).
P/N	Part Number – Refers to an ACR Electronics part number, unless otherwise noted. Part numbers are also indicated with parentheses (e.g., 28x-2828)
Plug	The term "Plug", within the context of this document, refers to the male half of an electrical connector.
Receptacle	The term "Receptacle", within the context of this document, refers to the female half of an electrical connector.
RF	Radio Frequency – The range of electromagnetic radiation that constitutes the radio spectrum and corresponds to the frequency of alternating current electrical signals used to produce and detect radio waves.
RTCA	Radio Technical Commission for Aeronautics – Organization that makes recommendations for airworthiness. Refer to http://www.rtca.org/aboutrtca.asp for more information.
RTV	A rubbery silicon-based adhesive typically used to prevent vibration problems and water intrusion.
SAR	Search and Rescue
Screen Room	The term "Screen Room", within the context of this document, refers to a room designed to suppress RF signals, such that the broadcast of an ELT placed in the screen room cannot reach the SAR satellite system.
Service Loop	A length of wire or cable, at the connection point, of sufficient length to allow a component to be withdrawn from its mounting position and disconnected from its associated wiring.
Tether	A tether is a cord or similar device that anchors something movable to a stationary point or anchors two items together, such that they cannot become separated beyond the length of the tether.
TNC Connector	A threaded version of a BNC connector.
TPS Connector	A small, rugged, three-pin bayonet locking connector designed for use when space and weight limitations are of primary concern.
TSO	Technical Standard Order – A TSO is a minimum performance standard issued by the FAA for specified materials, parts, processes, and appliances used on civil aircraft.
UTC	Coordinated Universal Time – A time standard based on International Atomic Time. UTC is the time system used in aviation and is often associated with Greenwich Mean Time (GMT) and/or "Zulu" time.
VHF	Very High Frequency – The 30 MHz to 300 MHz radio frequency band.
VSWR	Voltage Standing Wave Ratio – Electrical signals will "echo" back on a wire if load impedance is not matched to the impedance of the wire. VSWR is a measurement of the amount of voltage being "echoed," compared to the original signal.

TASK 25-62-03-990-806

6. References

SUBTASK 25-62-03-990-001

A. Regulatory Documents

1) The following regulatory documents are referred to herein. When referring to such documents, it is the manual user's responsibility to ensure they are using the latest revision or release of such documents. To that end, the revision designator of specific document numbers has not been included, with the exception of the RTCA document listing, which reflects the revision level of the documents at the time of TSO testing and certification.
2) Except in the case of a printed manual, reference documents available on-line or source locations are linked to applicable web sites.
3) United States
   a) AC 43-9, "Maintenance Records"
   b) AC 43-210, "Standardized Procedures for Requesting Field Approval of Data, Major Alterations, and Repairs"
   c) AC 43.9-1, "Instructions for Completion of FAA Form 337"
   d) AC 43-13-1, "Acceptable Methods, Techniques, and Practices – Aircraft Inspection and Repair"
   e) AC 43.13-2, "Acceptable Methods, Techniques, and Practices - Aircraft Alterations"
   f) FAR, Part 43, "Maintenance, Preventive Maintenance, Rebuilding, and Alteration"
   g) FAR, Part 91, "General Operating and Flight Rules"
4) Canada
   a) CAR, Part V, "Airworthiness"
   b) CAR, Part VI, "General Operating and Flight Rules"
5) COSPAS-SARSAT
   a) C/S G.005, "Cospas-Sarsat Guidelines on 406 MHz Beacon Coding, Registration and Type Approval"
   b) C/S S.007, "Handbook of Beacon Regulations"
6) RTCA – The following documents are available for purchase at RTCA's web site www.rtca.org, or by mail:
   a) DO-160D, "Environmental Conditions and Test Procedures for Airborne Equipment"
   b) DO-178B, "Software Considerations in Airborne Systems and Equipment Certification"
   c) DO-182, "Emergency Locator Transmitter (ELT) Equipment Installation and Performance"
   d) DO-183, "Minimal Operational Performance Standards for Emergency Locator Transmitters - Automatic Fixed-ELT (AF), Automatic Portable-ELT (AP), Automatic Deployable-ELT (AD), Survival-ELT (S) Operating on 121.5 and 243.0 MHz"
   e) DO-204, "Minimal Operational Performance Standards for 406 MHz Emergency Locator Transmitters (ELT)"

SUBTASK 25-62-03-990-002

B. Other Documents

1) The following documents are available on-line at the Artex products web site at www.acrartex.com, or from ACR Electronics upon request.
   a) 570-1000, "ELT Test Set (ETS) Operation Manual"
   b) 570-6501, "ELT/NAV Interface -B Description, Operation, Installation and Maintenance Manual"

TASK 25-62-03-870-801

1. Description

SUBTASK 25-62-03-870-001

A. Functional Overview

1) The ELT automatically activates during a crash and transmits the standard sweep tone on 121.5 and 243.0 MHz. Approximately every 50 seconds, for up to 520 milliseconds (long message protocol), the 406 MHz transmitter turns on. During that time, an encoded digital message is sent to the COSPAS-SARSAT Search and Rescue (SAR) satellite system.
2) The information contained in the message includes:
   a) Serial number assigned to the ELT by the beacon manufacturer or the national beacon registration authority, or
   b) Aircraft identification or registration number, and
   c) Country of registration and country code; plus
   d) Position coordinates, when coupled with an ELT/NAV Interface -B (453-6501). Refer to the ELT/NAV Interface -B Description, Operation, Installation and Maintenance Manual (570-6501) for a detailed discussion of the interaction between the ELT, ELT/NAV Interface -B, and aircraft navigation system.
3) The 406 MHz transmitter will operate for 24 hours and then shuts down automatically. The 121.5/243.0 transmitter will continue to operate until the batteries are exhausted, which is at least 50 hours.
4) The 406 MHz transmitter produces a much more accurate position, typically 3 kilometers as compared with 15 to 20 kilometers for 121.5/243.0 MHz transmitters. When coupled to the aircraft navigation system via the ELT/NAV Interface -B, the accuracy improves to approximately 100 meters.
5) The ELT transmits a digital message that allows search and rescue authorities to contact the owner/operator of the aircraft through information contained in a database. Information contained in the database includes:
   a) Type of aircraft and aircraft registration number,
   b) Owner address and telephone number, and
   c) Alternate emergency contact.
6) After the ELT is activated and the 406 MHz signal is detected by the SAR satellite system and a position is calculated, the 121.5/243.0 MHz transmissions are used to home in on the crash site.

   NOTE: Effective February 1, 2009, COSPAS-SARSAT has terminated satellite processing of distress signals from 121.5 and 243.0 MHz beacons.
7) Aircraft communications transceivers are not capable of receiving 406 MHz transmissions; therefore, the only methods of monitoring the ELT are:
   a) The cockpit remote switch panel light,
   b) The buzzer, or
   c) 121.5/243.0 MHz transmissions, which can be monitored using the aircraft communications transceiver or an AM radio tuned to 121.5 MHz.

SUBTASK 25-62-03-870-002

B. Components

1) The B406-4 ELT main assembly is housed in a high impact, fire resistant, polycarbonate plastic case, which is enclosed in a protective mounting frame assembly made of similar material. See Figure 1 B406-4 ELT and Mounting Frame Assembly.

   NOTE: The ELT main assembly and its mounting frame assembly are capable of withstanding extremely harsh environments and have been subjected to the rigorous environmental testing required by COSPAS-SARSAT for certification.

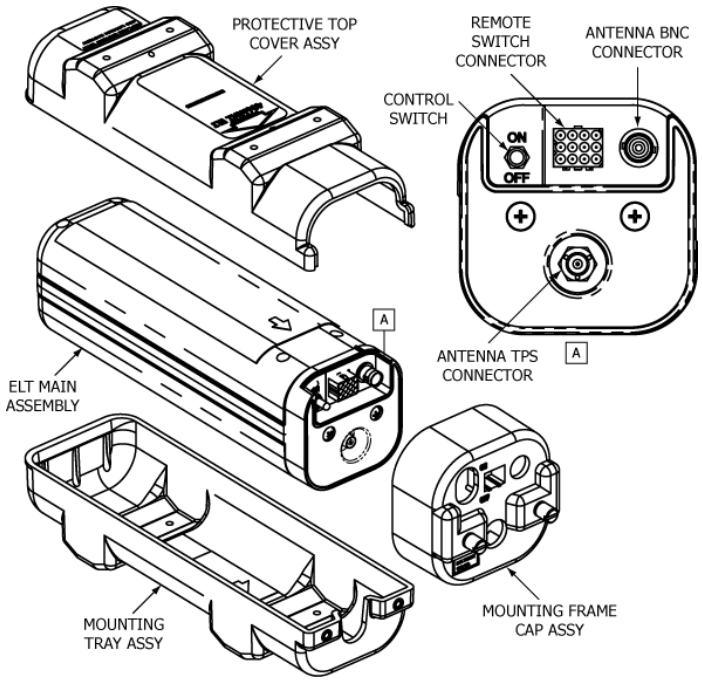

Figure 1 B406-4 ELT and Mounting Frame Assembly

2) The cockpit-mounted Control Panel G737 (remote switch panel assembly) is a backlit panel comprised of an ELT status indicator light and a control switch, which allows an operator to manually activate the ELT for testing and reset (i.e., deactivate) the ELT. See Figure 2 Remote Switch Panel Assembly Front View.

   NOTE: The ELT CANNOT be disarmed or disabled from the cockpit. Cockpit operation is limited to deactivating the ELT (i.e., reset) or manually activating the ELT.

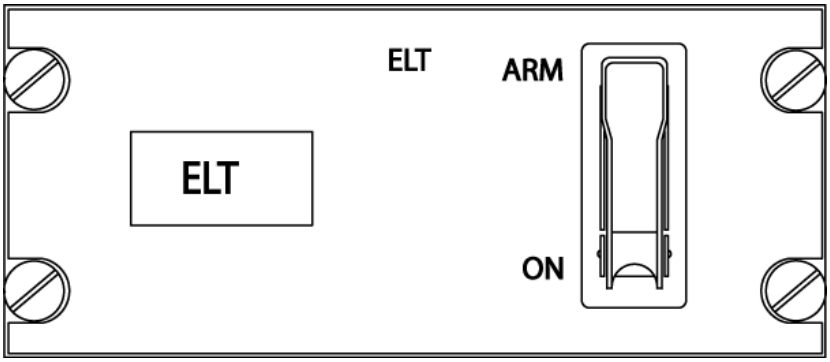

Figure 2 Remote Switch Panel Assembly Front View

3) The buzzer (i.e., horn) provides an audible alert when the ELT is active. See Figure 3 Buzzer.

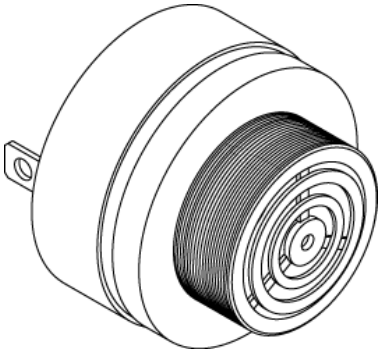

Figure 3 Buzzer

4) The battery pack for the B406-4 ELT consists of four "D" size lithium manganese dioxide cells connected in series. In an effort to increase the safety of the battery pack, a number of features were designed into the battery pack. To prevent the cells from being charged, diodes are connected across each cell and fuses are connected to the output. See Figure 4 Battery Pack Assembly.

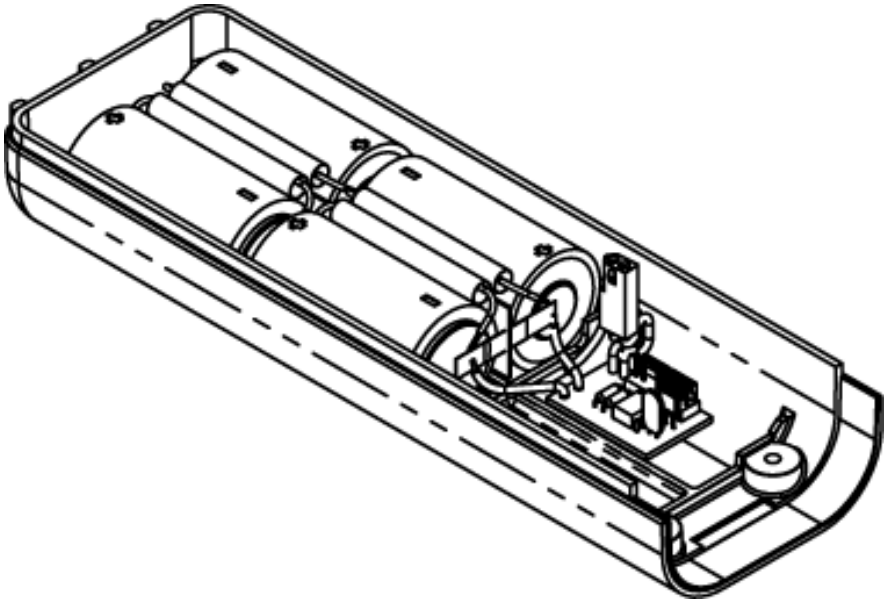

Figure 4 Battery Pack Assembly

5) Five dual-input antennas are approved for use with the B406-4 ELT. Selection of the proper antenna is dependent upon end use, aircraft configuration, speed, and other factors. See Figure 5 Antennas.

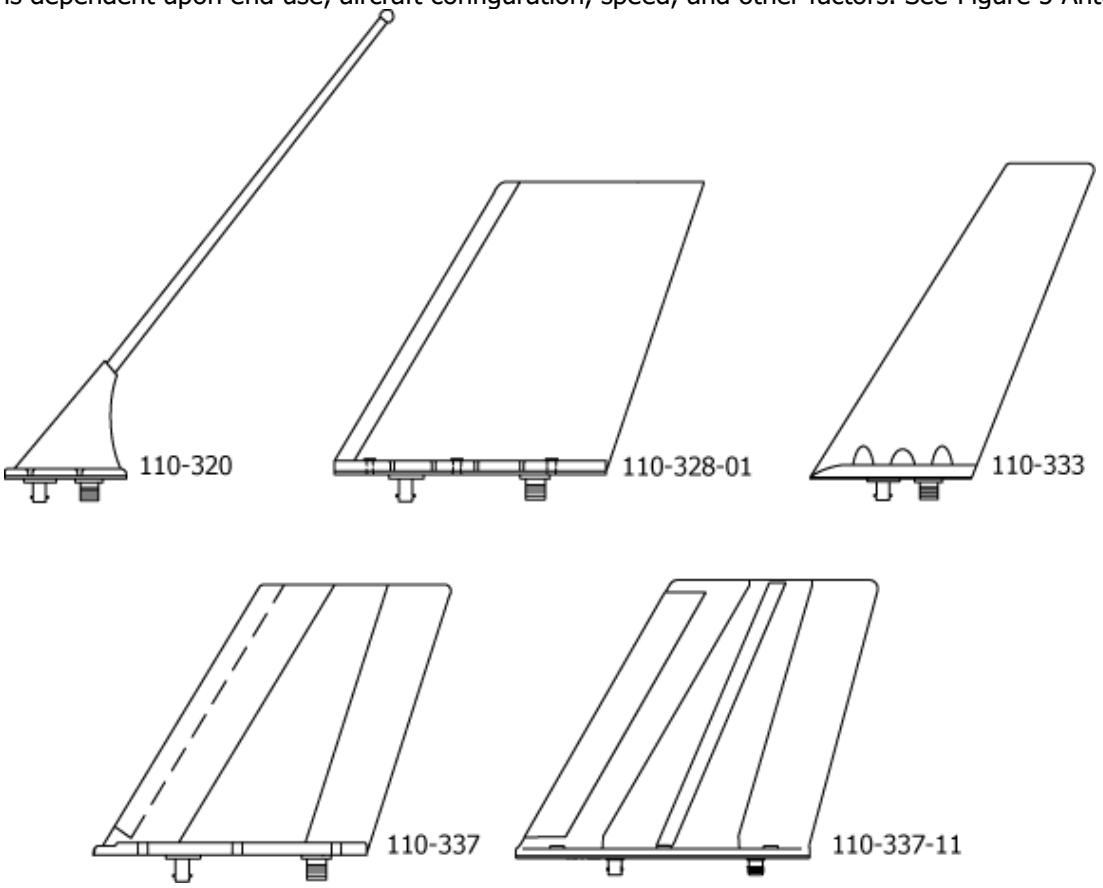

Figure 5 Antennas

TASK 25-62-03-870-803

2. Operation

SUBTASK 25-62-03-870-001

A. Operational Overview

1) See Figure 6 ELT Operational Flow Diagram.
2) A primary feature of the B406-4 ELT is its simplicity of operation. As long as the ELT is connected to the remote switch panel harness ELT connector, such that pins 5 and 8 are jumpered (G-switch loop), it will activate in the event of a crash.

   NOTE: Neither the cockpit remote panel switch Nor the ELT local switch can be positioned in such a manner as to prevent automatic activation when the ELT is connected properly.

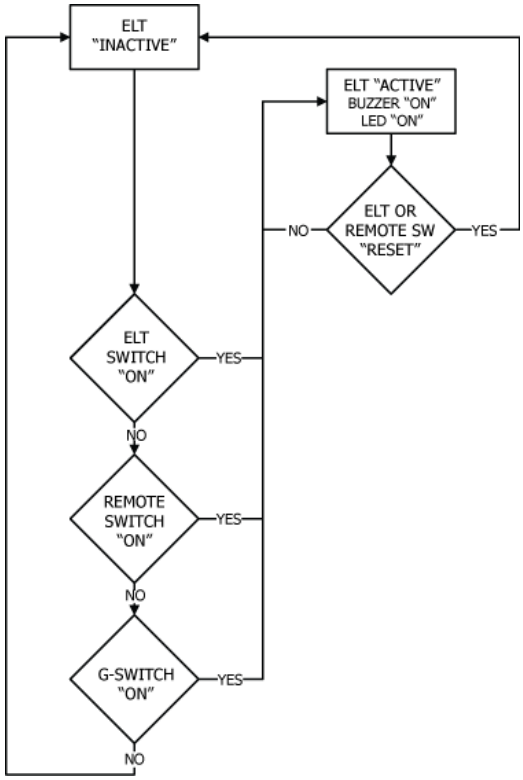

Figure 6 ELT Operational Flow Diagram

3) ELT operation is designed to prevent human error and misuse in regards to automatic activation. The ELT cannot be activated by dropping, rough handling or during shipping.
4) When the ELT is activated, the presence of the emergency sweep tone and the illuminated cockpit remote switch panel light indicates an active ELT. The cockpit ELT remote panel light must immediately illuminate upon ELT activation and stay on steady.

   NOTE: The local LED on the ELT flashes every 3-4 seconds when the ELT is activated.
5) The ELT is considered to be either "ACTIVE" or "INACTIVE". When "INACTIVE", the ELT is in a state of rest and performs no functions. Taking the ELT from the "INACTIVE" state to the "ACTIVE" state requires a positive switch transition from either the cockpit remote switch, ELT local switch, or G-switch.

   NOTE: It is possible the G-switch could activate the ELT as the result of severe maneuvers or a very hard landing.

6) To take the ELT from an "ACTIVE" state back to an "INACTIVE" state, a "RESET" must occur. See SUBTASK 25-62-03-870-004.
7) A warning buzzer is required under C126 TSO approval. The buzzer is powered by the aircraft battery.

SUBTASK 25-62-03-870-002

B. Normal Operation

1) The cockpit remote switch is in the "ARM" position (i.e., down).
2) The local switch on the ELT is in the "OFF" position (i.e., down).

SUBTASK 25-62-03-870-003

C. Manual Activation

1) The ELT may be manually activated by placing either switch in the "ON" position.

   NOTE: As long as the cockpit remote switch and the ELT local switch are in the ARM/OFF positions respectively, the ELT will automatically activate on impact.

SUBTASK 25-62-03-870-004

D. ELT Reset

1) If the ELT is activated accidently, it will need to be reset.
2) Reset the ELT from the cockpit by moving the remote switch to the "ON" position, waiting approximately one second, and then moving it back to the "ARM" position. If the switch is already in the "ON" position, move it to the "ARM" position.
3) Reset the ELT locally by moving the switch on the ELT to the "ON" position, waiting approximately one second, and then moving it back to the "OFF" position. If the switch is already in the "ON" position, move it to the "OFF" position.

   NOTE: The ELT cannot be reset if either the cockpit remote switch or the ELT local switch is in the "ON" position.

SUBTASK 25-62-03-750-001

E. Functional Check

1) A monthly functional check is recommended to verify operational status of the ELT.
2) Perform this functional check in accordance with SUBTASK 25-62-03-750-012 on page 35.

TASK 25-62-03-870-803

3. Specifications

SUBTASK 25-62-03-870-001

A. Environmental and Physical

1) Table 2 lists the environmental and physical specifications of the B406-4 ELT.

NOTE: For automatic activation, the higher threshold of 4.5 ft/sec (2.3 *g*) is specified in accordance with Eurocae ED-62. Use of the higher threshold crash sensor has been approved by the FAA as a deviation to TSO C126 (FAA Reference #98-130S-108, February 6, 1998).

CRITERIA	PARAMETER	CHARACTERISTIC
Temperature	Storage	-55° C to +85° C
	Operating	-20° C to +70° C
Mechanical	Vibration	10 *g* Sinusoidal 6.1 GRMS Random
	Shock	500 *g* for 4 ms
	Crashworthiness	100 *g* for 23 ms
	Humidity	95% for 240 hours
	Penetration	55 lbs from 6 in. (25 kg from 15 cm)
	Crush	1,000 lbs (454 kg)
	Altitude	55,000 ft (16,764 m)
Automatic Activation	G-Switch	4.5 ±0.5 ft/sec (2.3 *g*)
Weight	ELT Complete w/Battery Pack, Mounting Tray, and Covers	4.25 lbs (1.9 kg)
Dimensions (LxHxW)	ELT Complete w/Battery Pack, Mounting Tray, and Covers	11.63 x 3.90 x 3.76 in. (295 x 99 x 96 mm)
Software	In accordance with RTCA/DO-178B, Level D	

Table 2 Environmental and Physical Specifications

SUBTASK 25-62-03-870-002

B. Electrical

1) Table 3 lists the electrical specifications of the B406-4 ELT.

CRITERIA	PARAMETER	CHARACTERISTIC
Operating Frequencies	406.025 MHz	± 2 KHz (Initial) ± 5 KHz (5 years) 2 parts/10E9 in 100 ms
	406.028 MHz, or higher	± 1 KHz
	121.5 and 243.0 MHz	± 0.005%
Modulation	406 MHz	Bi-Phase L (G1D)
	121.5 and 243.0 MHz	Amplitude Modulation (A3X)
Transmitter Duty Cycle	406 MHz	440 ms (± 1%), or 520 ms (± 1%), every 50 seconds (± 5%)
	121.5 and 243.0 MHz	Continuous
Peak Effective Radiated Power (PERP)	406 MHz	5 W (37 ± 2 dB) PERP or EIRP for 24 hrs @ -20° to +55° C
	121.5 and 243.0 MHz	Min. 50 mW (17 dBm) PERP for 50 hrs @ -20° to +55° C or 100 mW EIRP (20 dBm) for 48 hrs @ -20° to +55° C
Occupied Bandwidth	406 MHz	20 KHz max.
	121.5 and 243.0 MHz	25 KHz max.
Spurious Emissions	406 MHz	Per RTCA/DO-204
	121.5 and 243.0 MHz	Per CFR Title 47 (FCC), Part 87
Battery	Type of Cell	Lithium Manganese Dioxide
	Voltage	12.0
	Amp-Hour Rating	10.0

Table 3 Electrical Specifications

SUBTASK 25-62-03-870-003

C. Antennas

1) Table 4 lists the specifications of the antennas approved for use with the B406-4 ELT.

PARAMETERS	CHARACTERISTIC				
	110-320	**110-328-01**	**110-333**	**110-337**	**110-337-11**
Style	Rod	Blade	Blade	Blade	Blade
Frequencies	121.5, 243.0, 406 MHz				
VSWR	121.5 and 243.0 MHz - 2.0:1 Max. 406 MHz - 1.5:1 Max.	121.5/243.0 MHz - 2.0:1 or better 406 MHz - 1.5:1 or better		121.5/243.0 MHz - 2.0:1 Max. 406 MHz - 1.5:1 Max.	
Polarization	Vertical Monopole				
Radiation Pattern	121.5/243 MHz - Omnidirectional 406 MHz - Hemispherical				
Impedance (ohms)	50 Nominal				
Weight	0.45 lbs (0.20 kg)	1.20 lbs (0.54 kg)	0.76 lbs (0.34 kg)	1.30 lbs (0.59 kg)	1.60 lbs (0.73 kg)
Coax Cable	RG-142				
Connectors	BNC Female (121.5/243.0 MHz) and TNC Female (406 MHz)				
Dimensions (Base-to-Tip)	15.50 in. (39.4 cm)	9.00 in. (22.9 cm)	10.10 in. (25.7 cm)	7.75 in. (19.7 cm)	

Table 4 Antenna Specifications

TASK 25-62-03-750-801

1. Inspection and Test Regulatory Requirements

SUBTASK 25-62-03-990-001

A. United States

1) In accordance with FAR Part 91, Subpart C, § 91.207 (d), the ELT must be inspected within 12 calendar months after the last inspection for:
   a) Proper installation;
   b) Battery corrosion;
   c) Operation of controls and crash sensor; and
   d) The presence of a sufficient signal radiated from its antenna.
2) All maintenance shall be performed in accordance with FAR Part 43, Appendix D, which requires the following inspections at each annual or 100-hour inspection:
   a) ELT and mount for improper installation;
   b) Wiring and conduits for improper routing, insecure mounting, and obvious defects;
   c) Bonding and shielding for improper installation and poor condition; and
   d) Antenna, including trailing antenna, for poor condition, insecure mounting, and improper operation.

SUBTASK 25-62-03-990-002

B. Canada

1) CAR Part VI, Standard 625, Appendix C, requires the ELT to be inspected at intervals not exceeding 12 months.
2) All maintenance and testing shall be performed in accordance with the requirements of CAR Part V, Standard 571, Appendix G, which requires:
   a) Corrosion inspection;
   b) Operational testing;
   c) Performance testing, including:
      1. Measured peak power after 3 minutes of operation,
      2. Measured frequency after 3 minutes of operation,
      3. Audio modulation, which shall be recognizable as a typical ELT signal,
      4. Measured current draw in the "OFF" (ARM) and in the "ON" position, as specified by the manufacturer, and
      5. The automatic activation system.

SUBTASK 25-62-03-990-003

C. Other Countries

1) For all other countries, maintenance and testing shall be conducted in accordance with the requirements of applicable national regulatory authorities and the requirements herein, as applicable. Local regulations and requirements shall take precedence.

2) In the absence of any inspection requirements from national regulatory authorities, operators should follow the annual inspection procedures outlined in Inspection and Test Regulatory Requirements, subsection United States above.

TASK 25-62-03-750-802

2. Inspection and Test Procedures

SUBTASK 25-62-03-990-001

A. Checklist

1) Table 5 provides a list of the ELT inspection and testing requirements, a copy of which may be used as a checklist to verify inspection and test completion. The item numbers in the table correspond to the item identifiers for each task.

NOTE: Items 5a through 5h are mandatory requirements only in Canada, in addition to meeting the other inspection and test requirements listed in Table 5.

ITEM NO.	DESCRIPTION	BY
1	Coax Cable and Wiring Connections Inspection	
2	ELT Mounting Tray and Hardware Inspection	
3	ELT Battery Pack Inspection	
4a	G-Switch Functional Check	
4b	G-Switch Functional Check (Helicopter Models Only)	
5a	121.5 MHz Frequency Measurement	
5b	Audio Modulation Check	
5c	121.5/243.0 MHz Power Output Measurement	
5d	406 MHz Frequency Measurement	
5e	406 MHz Power Output Measurement	
5f	Current Draw Test	
5g	Digital Message Verification	
5h	ELT Reset Check	
6	Installed Transmitter Test	
7	Antenna Test	
8	Inspection and Test Documentation	

Table 5 ELT Inspection and Test Checklist

SUBTASK 25-62-03-000-001

B. Preparation

1) Remove the ELT in accordance with : SUBTASK 25-62-03-010-001.
2) Remove the battery pack in accordance with SUBTASK 25-62-03-050-001.

SUBTASK 25-62-03-220-001

C. Coax Cables and Wiring Connections Inspection – Item 1

1) Check remote panel harness connector for corrosion bent or broken pins and other damage.
2) Check antenna coax cable connectors for corrosion, bent or broken center conductor, and other damage.

   NOTE: Pay special attention to the center conductor, which is prone to retracting into the connector housing.

SUBTASK 25-62-03-220-002

D. Mounting Tray and Hardware Inspection – Item 2

1) Inspect mounting tray for cleanliness, cracks, and other damage.
2) Check mounting tray hardware for corrosion and security.
3) Replace or send the ELT for repair if any of the following conditions are true:
   a. Cracks on any of the casings.
   b. Missing or damaged O-ring
   c. Damaged connector housing, connector pins or antenna connections of ELT.
4) Replace remote switch if any of the following conditions are true:
   a. Cracks on the casing.
   b. Illegible lettering on the face
   c. Damaged wiring and connections of remote switch.

SUBTASK 25-62-03-220-003

E. Battery Pack Inspection – Item 3

CAUTION: THE BATTERY PACK CONTAINS ELECTROSTATIC DISCHARGE SENSITIVE (ESD) COMPONENTS AND, AS SUCH, IT MUST BE HANDLED WITH CARE. IF POSSIBLE, WEAR A GROUNDED WRIST STRAP WHEN HANDLING THE BATTERY PACK DURING INSPECTION AND MAINTENANCE ACTIVITIES. TAKE PARTICULAR CARE TO AVOID TOUCHING THE EXPOSED CIRCUIT BOARD AND CONNECTOR PINS ON THE BOARD.

CAUTION: DO NOT USE CONTACT CLEANER ON ELT COMPONENTS. SUCH CHEMICAL AGENTS CAN BE HIGHLY DESTRUCTIVE TO THE MOUNTING HARDWARE AND ELT HOUSING, CAUSING CRACKING, FRACTURING AND OTHER DAMAGE.

1) Check battery cells, components, and connectors for corrosion and other damage.
2) Check wiring for breaks, damaged insulation, and improper or damaged connections.
3) Check housing for cracks and other visual damage.
4) Remove any corrosion residue from the underside of the ELT.
5) Check the battery pack expiration date.
6) Replace the battery pack if any of the following conditions are true:
   a) After use in an emergency;
   b) After an inadvertent activation of unknown duration;

c) When the total of all known transmissions exceeds one hour; or

d) On or before battery replacement (expiration) date.

SUBTASK 25-62-03-750-001

F. G-Switch Functional Check – Item 4a

CAUTION: A JUMPER AND 50-OHM LOAD IS REQUIRED TO PERFORM THIS CHECK. DUE TO POTENTIAL OF PHYSICAL OR ELECTRONIC DAMAGE IF THE JUMPER OR 50-OHM LOAD IS IMPROPERLY INSTALLED, THIS STEP SHOULD BE ONLY PERFORMED BY AN EXPERIENCED TECHNICIAN/MECHANIC.

1) Reinstall the battery temporarily. See SUBTASK 25-62-03-450-001 on page 61.

   NOTE: For the purposes of this and subsequent tests, it is suggested that the battery be installed with only two screws, located diagonally from each other.

2) Perform this functional check within the first 5 minutes after the hour (UTC), as required by AC 43.13-1, Chapter 12, § 12-22, Note 3.
3) Notify any nearby control tower of your intentions.
4) Install the 151-2012 test plug (receptacle) on the ELT plug or jumper ELT plug Pins 5 and 8.

   NOTE: The ELT cannot be activated using this procedure unless Pins 5 and 8 on the ELT plug are jumpered. See Figure 20 Remote Switch Panel Harness Wiring Diagram on page 54.

5) Verify the ELT switch is in the "OFF" position.
6) Monitor 121.5 MHz on an AM receiver.
7) Activate the ELT by using a rapid forward (i.e., throwing) motion in the direction of the arrow on the ELT label, followed by a rapid reversing action.
8) Verify activation by listening for the aural sweep tone on the receiver.
9) Reset the ELT by toggling the control switch to the "ON" position and then back to the "OFF" position.

SUBTASK 25-62-03-750-002

G. G-Switch Functional Check (Helicopter Models Only)– Item 4b

1) This procedure outlines the steps required to test the five-axis G-switch installed in ARTEX Helicopter Model (HM) ELTs.
2) Testing of the primary and five axis G-switch can be accomplished by simulating a rapid deceleration in the required direction of the G-switch. Although the "football throw" test as outlined in item 4a is sufficient to test the forward G-switch, a sturdy padded surface, such as a padded chair or foam-covered workbench, is required to simulate the G-force required to trigger the remaining axes. The padding of the surface is required to prevent damage to the ELT.

   NOTE: The fixed wing G-switch is triggered by approximately 2.3 Gs of deceleration (axis +X in Figure 7), whereas the five-axis G-switch is triggered by 12.5 Gs of deceleration (axes -X, -Y, +Y, -Z, and +Z in Figure 7), and requires a significant force to activate. The higher G-rating precludes inadvertent activation in helicopter applications but will allow for activation during a mishap.

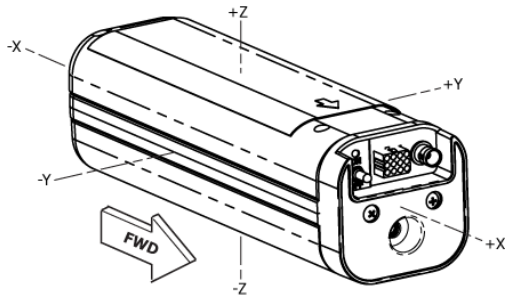

Figure 7 ELT Orthogonal Axes

3) Keep G-switch loop and 50-ohm load installed on the antenna port from Item 4a installed.
4) Utilizing the sturdy padded surface, hold the ELT 10 inches (26.1 Centimeters) above the test area and thrust down forcefully maintaining a level axis into the pad to test the -X axis (see Figure 7).
5) Repeat step 2 for the -Y, +Y, -Z, and +Z axes (see Figure 7).
6) Verify in each case that the ELT activates via G-switch trigger as indicated by the flashing LED. An auxiliary receiver set to 121.5 MHz should be used to detect the ELT signal.
7) Reset the ELT after each activation by toggling the ON/OFF switch to ON and then to OFF to reset the ELT.

SUBTASK 25-62-03-750-003

H. Performance Testing Setup

NOTE: The ELT software routine logs battery life in 30-second increments. A minimum of 30 seconds is added to the battery usage total each time the ELT is activated and de-activated. If the ELT is left activated beyond the first 30 seconds, additional time is added in 30-second increments.

NOTE: Careful planning of the performance tests is necessary to avoid activating the ELT more than necessary. Plan the performance testing in a manner that allows tests to be run concurrently and test equipment settings to be quickly switched from one test to another. By doing so, the three-minute warm-up requirement can be eliminated from a number of tests and battery run time minimized to a large extent.

1) Place the ELT in a container or screen room capable of substantially attenuating RF signals, or the transmitter power output shall be connected to a suitable dummy load to minimize radiation.
2) Use the ELT's own battery pack as the power source for these measurements. An alternate power source can be used where lengthy servicing, other than the performance tests, is anticipated.
3) Ensure that adequate attenuation rated for 406 MHz is installed between the ELT antenna output and the measurement equipment to prevent damaging input circuitry, if required. At a minimum, the attenuator should be rated at 30 dB, and 5 watts for a ½-second duration as shown in Figure 8 Performance Testing Equipment Setup on page 32.

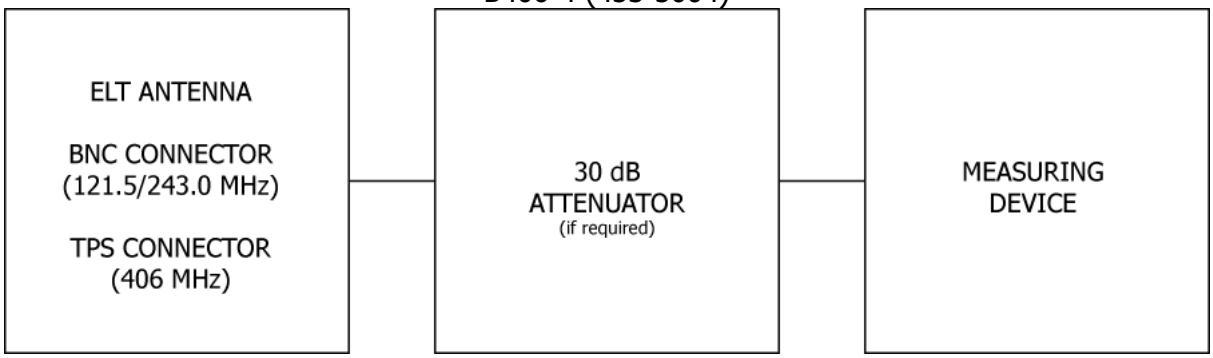

Figure 8 Performance Testing Equipment Setup

SUBTASK 25-62-03-750-004

I. 121.5 MHz Frequency Measurement – Item 5a

1) Connect the measuring device, referring to SUBTASK 25-62-03-750-003 on page 30.
2) Activate the ELT by placing the control switch in the "ON" position.
3) Wait three minutes.
4) Perform SUBTASK 25-62-03-750-005 during the three-minute waiting period.
5) Measure the frequency after the three-minute waiting period. The frequency should be within tolerance specified in Table 3 on page 24.

   NOTE: If the 121.5 MHz carrier frequency is within specified tolerance, the 243.0 MHz frequency will also be within tolerance.

SUBTASK 25-62-03-750-005

J. Audio Modulation Check – Item 5b

1) Perform this check in conjunction with SUBTASK 25-62-03-750-004 above.
2) Monitor 121.5 MHz on an AM receiver.
3) Listen for the aural sweep tone on the receiver. The audio should "sound" like an ELT.

SUBTASK 25-62-03-750-006

K. 121.5/243.0 MHz Power Output Measurement – Item 5c

1) Connect the measuring device, referring to SUBTASK 25-62-03-750-003 on page 30.
2) Activate the ELT, if necessary, by placing the control switch in the "ON" position.
3) Wait three minutes.
4) Read the displayed amplitude for 121.5 MHz. The amplitude must be within the minimum specified for 121.5 MHz in Table 3 on page 24, at the terminal output.
5) Change to 243.0 MHz and repeat the procedure for 243.0 MHz.

SUBTASK 25-62-03-750-007

L. 406 MHz Frequency Measurement – Item 5d

CAUTION: POWER OUTPUT IS APPROXIMATELY 37 dBm (5 WATTS). BE SURE ADEQUATE ATTENUATION IS INSERTED IN-LINE BETWEEN THE ELT ANTENNA OUTPUT AND THE MEASURING DEVICE TO PROTECT THE INPUT CIRCUITS OF THE MEASURING DEVICE.

1) Connect the measuring device, referring to SUBTASK 25-62-03-750-003 on page 30.
2) Activate the ELT, if necessary, by placing the control switch in the "ON" position.

3) Wait three minutes.
4) Measure the frequency. Measure the frequency after the three-minute waiting period. The frequency must be within the tolerance specified in Table 3 on page 24.

   NOTE: The exact 406 MHz frequency used is printed on the ELT product label.

SUBTASK 25-62-03-750-008

M. 406 MHz Power Output Measurement – Item 5e

CAUTION: POWER OUTPUT IS APPROXIMATELY 37 DB (5 WATTS). BE SURE ADEQUATE ATTENUATION IS INSERTED IN-LINE BETWEEN THE ELT ANTENNA OUTPUT AND THE MEASURING DEVICE TO PROTECT THE INPUT CIRCUITS OF THE MEASURING DEVICE.

1) Connect the measuring device, referring to SUBTASK 25-62-03-750-003 on page 30.
2) Activate the ELT, if necessary, by placing the control switch in the "ON" position.
3) Wait three minutes.
4) Read the displayed amplitude of the 406 MHz burst that follows the three-minute wait period. The amplitude must be within the minimum specified for 406 MHz in Table 3 on page 24, at the output terminal.
5) Deactivate the ELT by placing the control switch in the "OFF" position.

SUBTASK 25-62-03-750-009

N. Current Draw Test – Item 5f

CAUTION: EXERCISE EXTREME CAUTION TO AVOID CAUSING A SHORT CIRCUIT CONDITION, WHICH WILL BLOW THE FUSES IN THE BATTERY PACK. THIS TEST SHOULD ONLY BE PERFORMED BY AN EXPERIENCED TECHNICIAN/MECHANIC.

CAUTION: ALL "ON" STATE CURRENT MEASUREMENTS MUST BE MADE WITH THE RF OUTPUT (I.E., ELT ANTENNA CONNECTOR) LOADED WITH 50 OHMS RATED FOR 5 WATTS. EITHER A RESISTIVE LOAD OR EQUIPMENT WITH 50 OHM IMPEDANCE PADDED WITH 10 DB/5 WATT ATTENUATOR. REFER TO SUBTASK 25-62-03-750-003 ON PAGE 30.

1) Verify the ELT control switch is in the "OFF" position.
2) Separate the battery pack from the ELT.
3) Disconnect the 2-wire ELT power connector.
4) Install test harness 611-0024, or equivalent, in the power circuit. See Figure 9 Current Draw Test Setup on page 34.

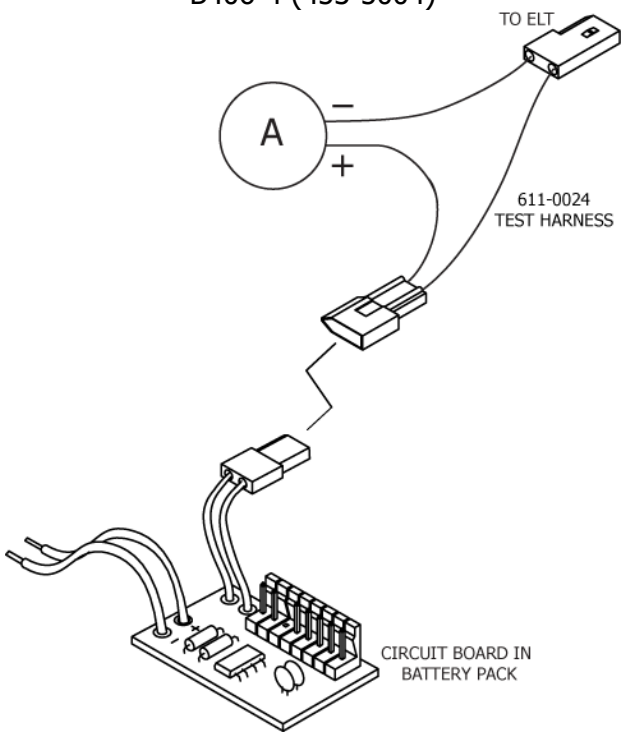

Figure 9 Current Draw Test Setup

5) Read the current draw on the ammeter. Measured current should be 0 µA (micro-amps), and must not be more than 6 µA.
6) Verify the ammeter is set to accommodate a range of at least 3.5 amps.
7) Activate the ELT by placing the control switch in the "ON" position.
8) Allow the ELT to stabilize for at least 30 seconds to avoid false readings.
9) Read the current draw on the ammeter. Steady state current draw must not exceed 200 mA.
10) Deactivate the ELT by placing the control switch in the "OFF" position.
11) Remove the test harness.
12) Reinstall the battery pack in accordance with SUBTASK 25-62-03-450-001 on page 61.

SUBTASK 25-62-03-750-010

O. Digital Message Verification – Item 5g

1) Set the 453-1000 ELT Test Set (ETS) beacon reader to receive and decode the ELT digital message. Refer to the ETS operating manual (570-1000) for ETS operating instructions and additional details.

   NOTE: A beacon reader equivalent to the ETS may be used, provided it is capable of receiving and decoding the 406 MHz digital message.
2) Activate the ELT by placing the control switch in the "ON" position.
3) Allow the ELT to transmit for approximately 5 seconds.
4) Deactivate the ELT and read the test message broadcast at "turn-off". Message examples are shown in Figure 10 Short and Long 406 MHz Message Examples on page 35.
   a) The test message broadcast by the ELT at "turn-off" contains all the information in an actual distress message, except there is a special digital prefix that informs COSPAS-SARSAT satellites to ignore the message.

b) The left hand example in Figure 10 Short and Long 406 MHz Message Examples is an ELT programmed for "User Protocol ELT with Serial Number", with a test Hex ID. The right hand example is an ELT programmed for "Standard Location Protocol ELT with Serial Number".

c) Actual messages will vary depending on the protocol and information programmed into the ELT.

d) If the ELT is programmed with a location (long message) protocol and disconnected from the ELT/NAV Interface -B, the message will indicate "Position Invalid" in lieu of position data, as shown in the right hand example in Figure 10 Short and Long 406 MHz Message Examples.

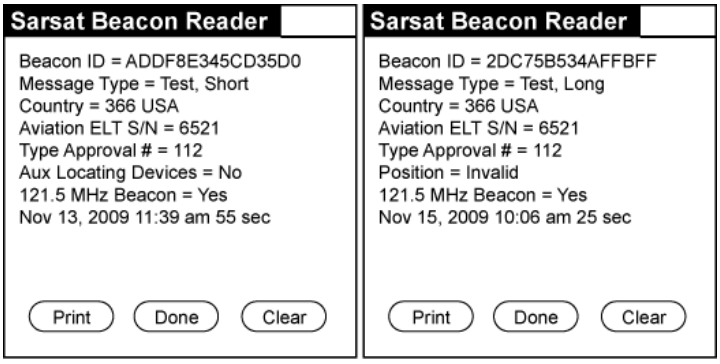

Figure 10 Short and Long 406 MHz Message Examples

5) Repeat the activation and deactivation cycle if the ETS fails to read the message on the initial try. The 406 MHz oscillator may not be warmed up. If continued attempts to read the message fail, check for self-test error codes and refer to Table 6 on page 38.

SUBTASK 25-62-03-750-011

P. ELT Reset Check – Item 5h

1) Place the ELT control switch in the "ON" position.
2) Return the switch to the "OFF" position.
3) If the ELT is working properly, the LED will stay on for approximately 1 second and then turn off. If a series of flashes are displayed, refer to Table 6 on page 38.

   NOTE: A 5-flash error indication will occur if the ELT is programmed with a location protocol, since no navigation input data is present.

SUBTASK 25-62-03-750-012

Q. Installed Transmitter Test – Item 6

CAUTION: DO NOT ALLOW THE DURATION OF THIS TEST TO EXCEED 5 SECONDS. THE ELT WILL TRANSMIT A 406 MHZ SIGNAL AFTER THE ELT IS ACTIVATED FOR APPROXIMATELY 47 SECONDS. THE COSPAS-SARSAT SATELLITE SYSTEM WILL CONSIDER THE 406 MHZ TRANSMISSION TO BE A VALID DISTRESS SIGNAL.

1) Reinstall the ELT battery pack. See SUBTASK 25-62-03-450-001 on page 61.
2) Reinstall the ELT. See SUBTASK 25-62-03-410-001 on page 59.
3) Perform the following functional check within the first 5 minutes after the hour (UTC), as required by AC 43.13-1, Chapter 12, § 12-22, Note 3.
4) Notify any nearby control tower of your intentions.
5) Tune a receiver, usually the aircraft transceiver, to 121.5 MHz.

   NOTE: An AM radio may be used to receive the signal.

6) Monitor the LED on the ELT during this test.

7) Activate the ELT by placing the cockpit remote switch in the "ON" position. The panel light will illuminate and stay on steady.

   NOTE: The LED on the ELT will begin flashing continuously when the ELT is activated.

8) Listen for 3 audible sweeps on the receiver, which takes about 1 second.
9) Verify the buzzer sounds immediately upon activation.
10) Return the remote switch to the "OFF" position while monitoring the ELT LED activity when the ELT enters the "OFF" condition. If the ELT is working properly, the LED will stay on for approximately 1 second and then turn off.

    NOTE: This test also completes the requirement to check ELT controls by verifying operation of the remote switch.

11) Refer to Table 6 on page 38 if the ELT LED displays a series of flashes.

SUBTASK 25-62-03-750-013

R. Antenna Test – Item 7

CAUTION: DO NOT ALLOW THE DURATION OF THIS TEST TO EXCEED 5 SECONDS.

1) Tune a low quality AM receiver (i.e., radio) to 121.5 MHz.

   NOTE: The aircraft transceiver is not recommended for this test, because it is too sensitive to verify the integrity of the antenna system and it may pick up a weak signal even if the antenna is disconnected from the ELT. An AM radio provides a better level of confidence for this test.

2) Place the radio approximately six inches from the antenna.
3) Activate the ELT by placing the cockpit remote switch in the "ON" position.

   NOTE: Perform this test within the first five minutes after the hour UTC.

4) Listen for 3 audible sweeps on the radio, which takes about 1 second. An audible signal verifies energy is being transmitted by the antenna.
5) Reset the ELT by placing the cockpit remote switch in the "ARM" position.

SUBTASK 25-62-03-750-014

S. Inspection and Test Documentation – Item 8

1) Make an appropriate entry in the aircraft maintenance records (i.e., logbook), including the date the ELT inspection and testing was satisfactorily completed.
2) In addition to the requirements of Step (1), for aircraft operating under Canadian authority and following satisfactory completion of performance testing, the date on which the test was performed shall be marked on the ELT external casing in a legible and permanent manner.

TASK 25-62-03-810-801

3. Troubleshooting

SUBTASK 25-62-03-810-001

A. Self-Test Error Troubleshooting Guidelines

1) Table 6 describes the ELT self-test LED error codes (i.e., flash codes), their probable causes, and possible solutions. The 5-flash error is not present when the ELT is programmed with a serial user protocol (short message).

NOTE: Upon activation, the LED will display a long single flash, which is normal. Any self-test error codes will display following this initial flash. Do not confuse the initial flash with a 1-flash error code. If there are multiple errors, there is a 0.5 to 1.0 second pause between each error code.

CODE	PROBABLE CAUSE	POSSIBLE SOLUTION
1-Flash	Indicates a G-switch loop open (Pins 5 and 8)	
	Remote switch harness connector loose or disconnected at ELT	Check connector and tighten as necessary
	ELT connector pins bent or broken	Check condition of connector pins and repair or replace as necessary
	Connector pins 5 and 8 jumper open (internal to remote switch harness connector at ELT end)	Repair open jumper
3-Flash	Indicates a 406 MHz transmission problem	
	Open or short condition on antenna output or coax cable	Verify the coax cable/antenna is connected and in good condition Perform continuity check of center conductor and shield Check for a shorted cable
		Check for intermittent connection in the coax cable
	Antenna or installation faulty	Check with a VSWR meter. Check antenna for opens, shorts, or a resistive ground plane connection
	Impedance presented by antenna	Lengthen or shorten antenna coax cable length by 4 to 6 inches
	Insufficient ground plane	Provide ground plane at least 12 inches in diameter
	Upright metal structure obstructing antenna causing re-radiation	Stay at least 10-12 inches away from upright metal structures

CODE	PROBABLE CAUSE	POSSIBLE SOLUTION
3-Flash (cont.)	Low power output	Battery low
		3A fuse on battery pack circuit board faulty
	Improper programming	Verify 406 MHz programming
	Transmitter module faulty	Cannot be repaired in field - Return to factory for servicing
5-Flash	Indicates there is no navigation position data present	
	Aircraft navigation system off	Turn on navigation system
	Faulty system interface wiring or connections	Check wiring and connections for continuity and security
	No 453-6501 ELT/NAV Interface-B installed	Install 453-6501 ELT/NAV Interface -B
		Reprogram to short message
7-Flash	Indicates a battery problem	
	Operating time is >1 hour	Replace battery pack
	Electrical circuits faulty	

Table 6 ELT Self-Test Error Codes Troubleshooting Guide

SUBTASK 25-62-03-810-002

B. ELT Troubleshooting Guidelines

(1) Table 7 provides ELT troubleshooting guidelines for installation and operational issues.

SYMPTOM	PROBABLE CAUSE	POSSIBLE SOLUTION
Remote panel status light always on (steady)	Improper wiring	Verify wiring
	Short circuit	Check for frayed insulation
		Verify integrity of all crimp and solder connections
ELT will not turn off	Battery too low to support 406 burst and causes circuit to reset	Remove battery pack to disable ELT and replace battery pack
	Turn off ELT using local switch - If ELT turns off:	
	Defective remote panel harness reset circuit wiring	Check wiring continuity and repair as necessary
	Defective remote switch	Replace remote panel
	If ELT does not turn off using local switch:	
	ELT defective	Remove battery pack to disable ELT and return ELT to factory for servicing

Table 7 ELT Troubleshooting Guide

REMOVAL

TASK 25-62-03-010-801

1. ELT

SUBTASK 25-62-03-010-001

A. ELT Removal

1) See Figure 11 ELT Removal Sequence.

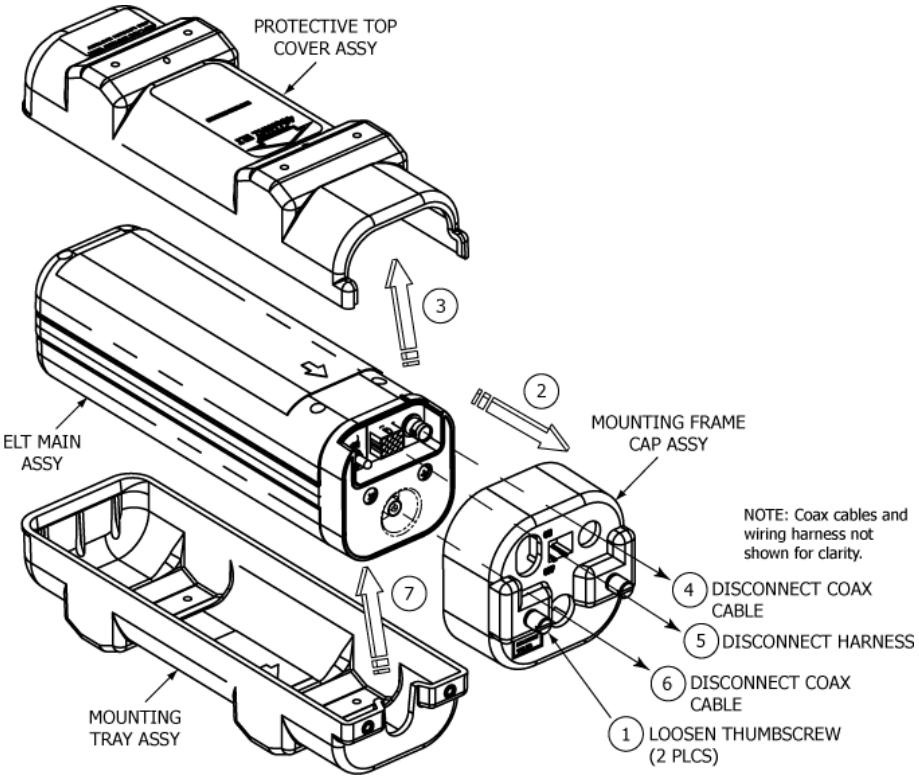

Figure 11 ELT Removal Sequence

2) Loosen the mounting frame cap thumbscrews.
3) Slide the mounting frame cap back away from the ELT.
4) Lift the protective top cover up, away from the ELT and set it aside.
5) Disconnect the two antenna coax cables from the ELT.
6) Disconnect the harness receptacle from the ELT, if necessary.
   NOTE: The receptacle may disconnect when the mounting frame cap is pulled back.
7) Lift the ELT up from the connector end.
   NOTE: Careful use of a flat blade screwdriver as a lever will make this step easier.
8) Slide the ELT up and out, away from the mounting tray.

TASK 25-62-03-050-801

2. Battery

SUBTASK 25-62-03-050-001

A. Battery Pack Removal

CAUTION: THE BATTERY PACK CONTAINS ELECTROSTATIC DISCHARGE SENSITIVE (ESD) COMPONENTS AND IT MUST BE HANDLED WITH CARE. IF POSSIBLE, WEAR A GROUNDED WRIST STRAP WHEN HANDLING THE BATTERY PACK DURING INSTALLATION ACTIVITIES. TAKE PARTICULAR CARE TO AVOID TOUCHING THE EXPOSED CIRCUIT BOARD AND CONNECTOR PINS ON THE BOARD

CAUTION: THE BATTERY PACK IS CONNECTED TO THE ELT VIA SHORT INTERCONNECT HARNESSES, WHICH LIMIT THE DISTANCE THE TWO COMPONENTS CAN BE SEPARATED UNTIL THE HARNESSES ARE DISCONNECTED.

1) See Figure 12 Battery Pack Removal.

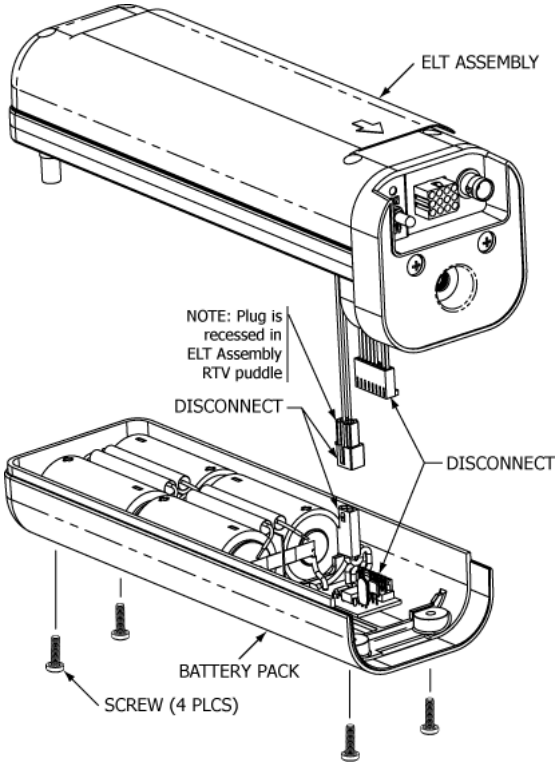

Figure 12 Battery Pack Removal

2) Turn the ELT upside down, such that the battery pack is bottom side up.
3) Remove the four retaining screws.
4) Lay the ELT on its side, while keeping the ELT and battery pack securely held together.
5) Separate the battery pack from the ELT, taking care not to put strain on the short interconnect harnesses.
6) Disconnect the large harness from the 8-pin header on the small circuit board mounted in the battery pack.
7) Disconnect the battery pack 2-wire harness from the connector recessed in the ELT body.

TASK 25-62-03-500-801

3. Material or Equipment Return

SUBTASK 25-62-03-510-001

A. Shipment Information

1) If any material or equipment is to be returned to the factory, under warranty or otherwise, ACR Electronics must be notified prior to shipment with the following information:
   a) Model and serial number of equipment being returned,
   b) Date purchased,
   c) Date placed in service,
   d) Number of hours in service,
   e) Nature and cause of failure, and
   f) Remarks, if any.

SUBTASK 25-62-03-580-001

B. Return Material Authorization

1) Upon receipt of such notice, ACR Electronics will issue a Return Material Authorization (RMA) number which then authorizes return of the material or equipment to the following address:

Repair and Overhaul

ACR Electronics

5757 Ravenswood Road

Fort Lauderdale, FL 33312 USA

Phone: (954) 981-3333

Fax: (954) 983-5087

   a) Failure to obtain a RMA number and provide the details listed in SUBTASK 25-62-03-990-002 may cause unnecessary delay and/or rejection of the returned material or equipment.
   b) All material or equipment returned to the factory must be freight prepaid.
   c) Acceptable methods of shipment for international return are Airborne, Burlington Air, DHL, Emery, Federal Express, UPS International, and World Wide only.

   NOTE: Do not use "International Commercial Airlines", such carriers may cause a loss of returned material or equipment.

TASK 25-62-03-410-801

1. Regulatory Requirements and Guidelines

SUBTASK 25-62-03-990-001

A. For US Registered aircraft:

WARNING: FAILURE TO REGISTER THIS ELT WITH NOAA BEFORE INSTALLATION COULD RESULT IN A MONETARY FORFEITURE BEING ISSUED TO THE OWNER.

2) To enhance protection of life and property, it is mandatory that each 406.0-406.1 MHz ELT must be registered with NOAA before installation and that information be kept up-to-date. In addition to the identification plate or label requirements, each 406.0-406.1 MHz ELT is provided on the outside with a clearly discernable permanent plate or label containing the following statement: "The owner of this 406.0-406.1 MHz ELT must register the NOAA identification code contained on this label with the National Oceanic and Atmospheric Administration (NOAA), whose address is:

NOAA/SARSAT Beacon Registration

NSOF E/SPO53

1315 East West Hwy

Silver Spring, MD 20910-3282

3) Aircraft owners must advise NOAA in writing upon change of aircraft or ELT ownership, or any other change in registration information. Fleet operators must notify NOAA upon transfer of ELT to another aircraft outside of the owner's control, or another change in registration information. NOAA will provide registrants with proof of registration and change of registration postcards.

B. TSO C126, Paragraph D

1) TSO approval of the ELT does not constitute installation approval. All ELT installations are subject to field approval for a given airframe by either an approved FAA DER or FAA FSDO. For installations outside the US, contact your local civil aviation regulatory agency for details.
   a) The remote switch is a requirement of TSO C126 and installation is not optional.
   b) The buzzer is a requirement of TSO C126 and installation is not optional.

SUBTASK 25-62-03-990-002

C. FAA

1) This manual constitutes supporting data, as described in AC43.9-1, Paragraph 6.h.(2) and AC 43-210, Chapter 2, Paragraph 201(a)(6), and as such may be used as support for FAA field approval of the ELT installation.
2) In addition to the procedures outlined herein and in accordance with FAR Part 43, the installer must adhere to the aircraft manufacturer's instructions and recommendations and the guidelines provided by FAA Advisory Circular AC 43.13-2 "Acceptable Methods, Techniques, and Practices - Aircraft Alterations", specifically Chapters 1 through 3, 11, and 13.
3) By signing the aircraft logbook, and FAA Form 337, the installer is stating the installation has been performed in accordance with current FAR requirements and the procedures outlined herein. The completed Form 337 is provided to the FAA and also becomes a permanent part of the aircraft maintenance records in accordance with AC43-9, Paragraph 17.

SUBTASK 25-62-03-990-003

D. Canada

1) All installations must be performed in accordance with Canadian Aviation Regulations (CAR) Part V, Chapter 551, Paragraph 551.104.

SUBTASK 25-62-03-990-004

E. Other Countries

1) Installations in aircraft outside of the United States and Canada, must be performed in accordance with applicable regulatory authority rules and regulations.

SUBTASK 25-62-03-990-005

F. RTCA

1) DO-204, § 3.1.8 guidelines for mounting a ELT:
   a) The ELT shall be mounted to primary aircraft load carrying structures, such as trusses, bulkheads, longerons, spars, or floor beams.
   b) The mounts shall have a maximum static local deflection no greater than 0.1 inches (2.5 mm) when a force of 100 lbs (450 newtons) is applied to the mount in the most flexible direction. Deflection measurements shall be made with reference to another part of the aircraft not less than 1 foot (0.3 meters) nor more than 3 feet (1.0 meters) from the mounting location.
2) DO-182, § 6.2.2.b recommends that:
   a) To maximize the probability of the ELT transmitting a detectable signal after a crash, all ELT system components, which must survive a crash intact, e.g., transmitter and external antenna, should be attached to the airframe in such a manner that the attachment system can support a 100 g load, (ELT weight x 100, ELT antenna weight x 100, etc.) applied through the center of gravity of the component (ELT, antenna, etc.) in the plus and minus directions of the three principal axes of the aircraft.
   b) Post-crash critical components of the ELT system, e.g., transmitter and external antenna, should be mounted as close to each other as possible.
   c) The antenna coax cable should not cross any production breaks, e.g., major structure sections, such that the ELT and antenna are in the same section of the aircraft and as close together as possible.
   d) If the ELT and external antenna are on opposite sides of an airframe production break, the components should be secured to each other by a tether that can support a 100 g load (ELT weight x 100). The interconnecting antenna-to-ELT coax cable should have sufficient slack on both ends that it will not be subjected to any tensile load and should be tied loosely to the tether.

TASK 25-62-03-450-801

2. Mounting Tray

SUBTASK 25-62-03-450-001

A. Location

CAUTION: MANY ORIGINAL ELT INSTALLATIONS ARE INADEQUATE AS FAR AS UNIT LOCATION AND SURFACE RIGIDITY ARE CONCERNED. BECAUSE OF THE CRITICAL FUNCTION AN ELT PERFORMS, IT IS IMPORTANT THE INSTALLATION FOLLOWS THE INSTRUCTIONS AND RECOMMENDATIONS HEREIN.

CAUTION: THE MOUNTING SURFACE MUST BE EXTREMELY RIGID; THEREFORE, MOUNTING AN ELT DIRECTLY TO THE AIRCRAFT SKIN IS UNACCEPTABLE. MOUNTING THE ELT DIRECTLY TO THE AIRCRAFT SKIN INDUCES "CRASH HIDING" VIBRATIONS AND PROVIDES A VERY POOR MOUNTING SURFACE.

CAUTION: AVOID LOCATING THE ELT WHERE IT WILL BE SUBJECTED TO UNPROTECTED EXPOSURE TO HARSH CHEMICAL FLUIDS SUCH AS DEICING COMPOUNDS. THESE TYPES OF CHEMICAL FLUIDS CAN PROMOTE CRACKING AND FRACTURING OF THE ELT MOUNTING FRAME AND HOUSING COMPONENTS BY DEGRADING THE STRUCTURAL INTEGRITY OF THESE COMPONENTS. THESE SAME CHEMICAL AGENTS MAY ALSO CAUSE CORROSION OF ELECTRICAL CONNECTIONS.

1) Select a suitable location for the mounting tray. See Figure 13 B406-4 ELT Outline and Dimensions. Refer to these dimensions when determining mounting location.

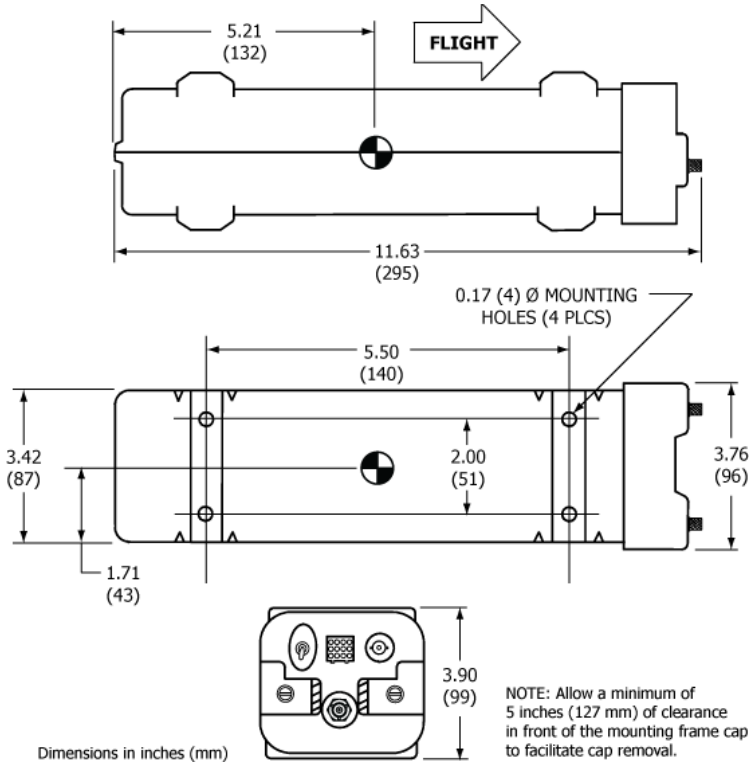

Figure 13 B406-4 ELT Outline and Dimensions

2) Locate the mounting tray such that the ELT mounting frame cap has at least 5 inches (127 mm) of clearance for installation and removal.

3) Mount the ELT as far aft as practical, but where it can be easily retrieved for maintenance.

   NOTE: Statistics show that the tail section of an airplane is likely to be less damaged during a crash; therefore, providing a good mounting environment for the ELT.

4) Additional installation guidance may be found in AC 43.13-2, Chapter 2, Paragraph 28, which specifically addresses ELT installations.

SUBTASK 25-62-03-450-002

B. Installation

1) See Figure 14 Typical Mounting Tray Installation.

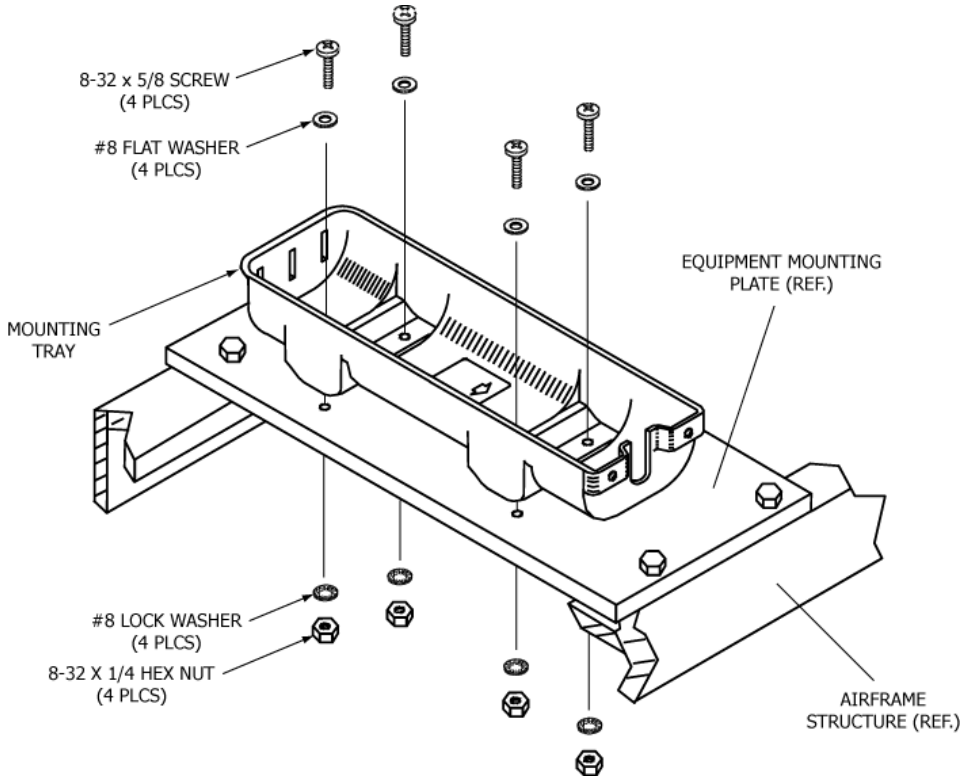

Figure 14 Typical Mounting Tray Installation

2) Install the necessary mounting structure as appropriate for the specific installation.
3) Align the mounting tray (452-5050) on the mounting structure, such that the arrow on the tray is within 10° of the longitudinal axis of the aircraft and pointing in the direction of flight.
4) Mark the four holes needed for mounting the tray, using the tray as a pattern. The hole pattern is also illustrated in Figure 13 B406-4 ELT Outline and Dimensions on page 45.
5) Drill the four mounting holes with a #19 or 4.25 mm drill.
6) Install the mounting tray with the 8-32 x 5/8″ SS pan head Phillips screws, flat washers, lock washers, and nuts provided in the installation kit (455-7421), as shown in Figure 14 Typical Mounting Tray Installation. Torque to 12 ±1 lb-in (136 ± 11 N•cm).

   NOTE: The use of substitute mounting hardware is acceptable provided the hardware used meets or exceeds the strength and corrosion resistance of the original hardware.

TASK 25-62-03-450-802

3. Antenna

SUBTASK 25-62-03-990-001

A. Selection

1) Use only antennas approved for use with the B406-4 ELT. The ELT will not work properly without being connected to an antenna for which it was designed.
2) Verify the antenna selected matches the requirements of the specific installation. Considerations include aircraft maximum rated speed, location restrictions, and any other considerations specific to the installation.

SUBTASK 25-62-03-450-001

B. Location

1) Select a suitable location for the antenna.
   a) Place the antenna in a location where the antenna can be installed within 15° of vertical and with at least 30 inches (762 mm) of clearance from other antennas, particularly VHF, in accordance with RTCA/DO-204, § 3.1.10.2.

   NOTE: AC 43.13-2, Chapter 3 recommends a minimum distance of 36 inches (914 mm) clearance between antennas.

   b) Additional location guidance may be found in AC 43.13-2, Chapter 3, which deals specifically with antenna installations.

SUBTASK 25-62-03-450-002

C. Installation

NOTE: Refer to the airframe manufacturer's written instructions and AC 43.13-2, Chapter 3 for antenna installation practices and requirements.

1) Install a doubler plate if necessary to meet rigidity requirements. A 20 lb (9.1 kg) force applied to the antenna in all directions should not cause an appreciable distortion in the aircraft skin.
2) Install a ground plane if necessary. In certain applications, particularly those where antennas are installed on composite, fabric, or wood airframes, a ground plane is required.
3) Drill the antenna mounting holes and coax connector holes referring to the appropriate antenna illustration for hole patterns and hole sizes.
   a) See Figure 15 Rod Antenna 110-320 and Blade Antenna 110-328-01 Outlines and Dimensions on page 48, Figure 16 Blade Antennas 110-333 and 110-337 Outlines and Dimensions on page 49, and Figure 17 Blade Antenna 110-337-11 Outline and Dimensions on page 50.
4) Mount the antenna referring to the appropriate antenna illustration for hardware requirements, torque, and other applicable installation requirements.
5) Two coax cables, 6 feet (1.8 m) long, are provided as part of the ELT kit. The 121.5/243.0 MHz cable has BNC connectors and the 406 MHz cable has TNC (antenna) and TPS (ELT) connectors.

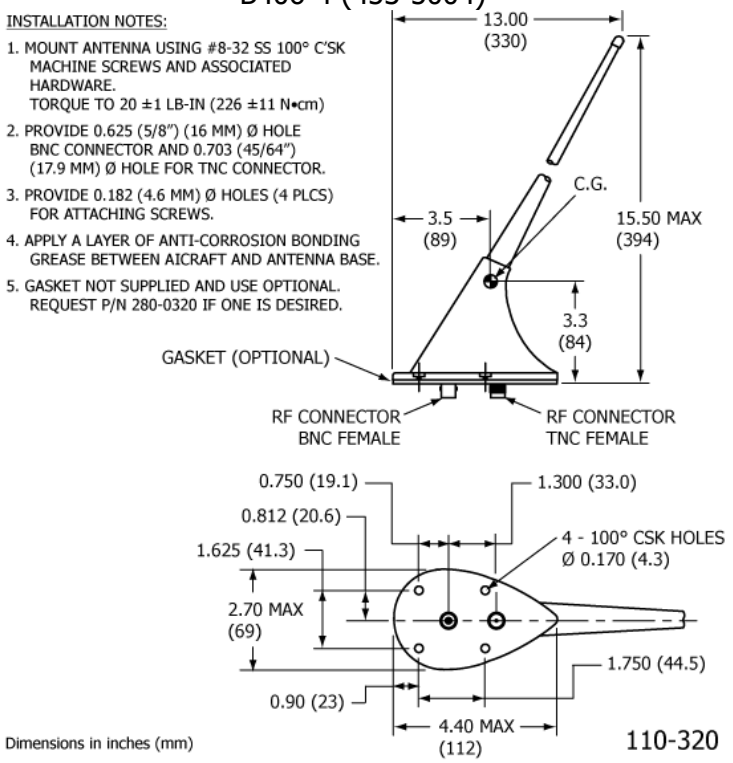

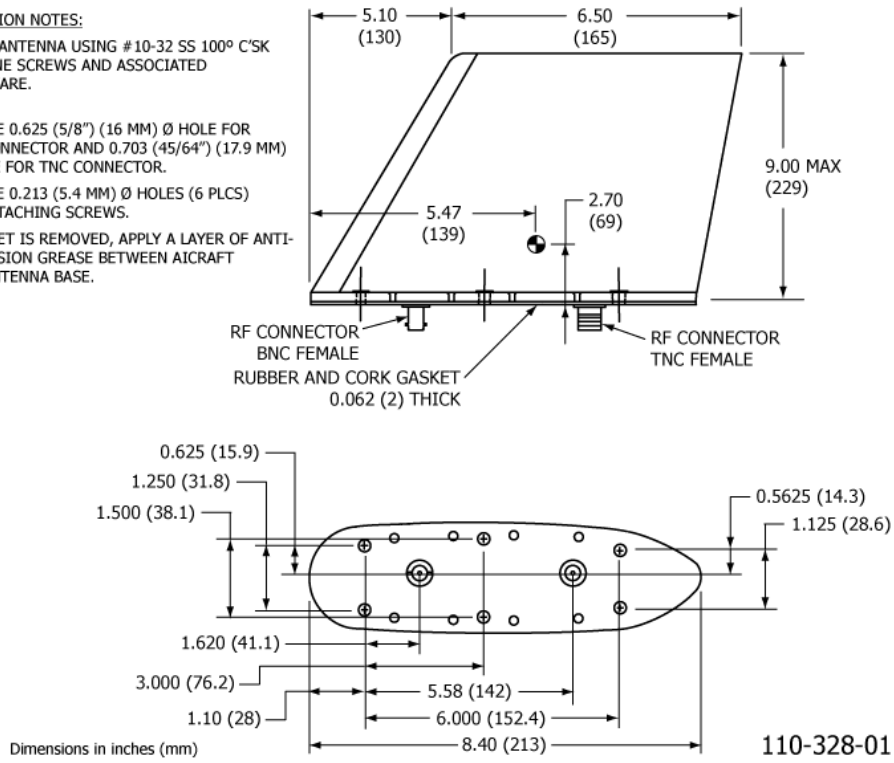

Figure 15 Rod Antenna 110-320 and Blade Antenna 110-328-01 Outlines and Dimensions

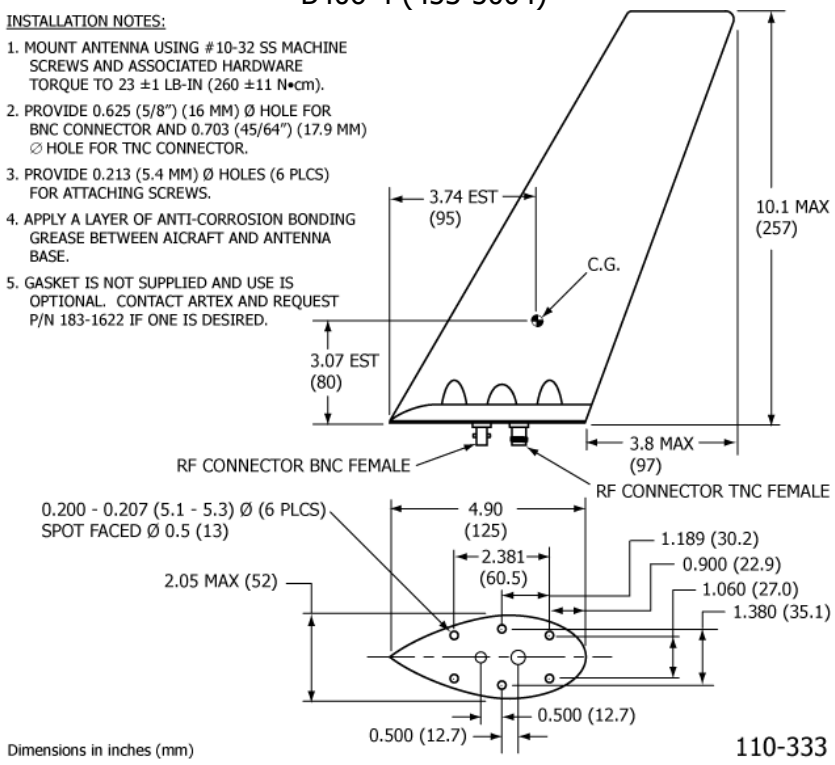

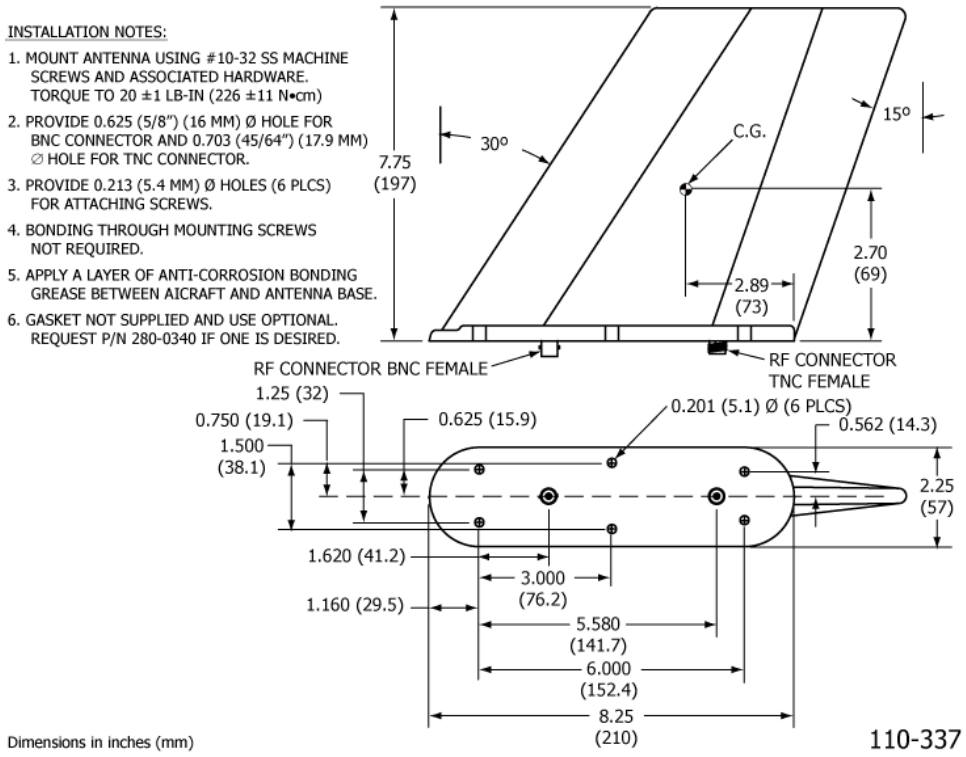

Figure 16 Blade Antennas 110-333 and 110-337 Outlines and Dimensions

INSTALLATION NOTES:

1. MOUNT ANTENNA USING #10-32 SS MACHINE SCREWS AND ASSOCIATED HARDWARE AND TORQUE TO 20 IN/LBS.
2. PROVIDE A 5/8" (.625") DIAMETER HOLE FOR THE BNC CONNECTOR.
3. PROVIDE A 5/8" (.625") DIAMETER HOLE FOR THE TNC CONNECTOR.
4. A LAYER OF ANTI-CORROSION BOUNDING GREASE SHOULD BE APPLIED BETWEEN THE AIRCRAFT AND THE BASE OF THE ANTENNA
5. THIS ANTENNA IS BOUNDED THRU THE MOUNTING SCREWS.
6. GASKET IS NOT SUPPLIED AND USE IS OPTIONAL. CONTACT ACR/ARTEX AND REQUEST PART #280-0340 IF ONE IS DESIRED.

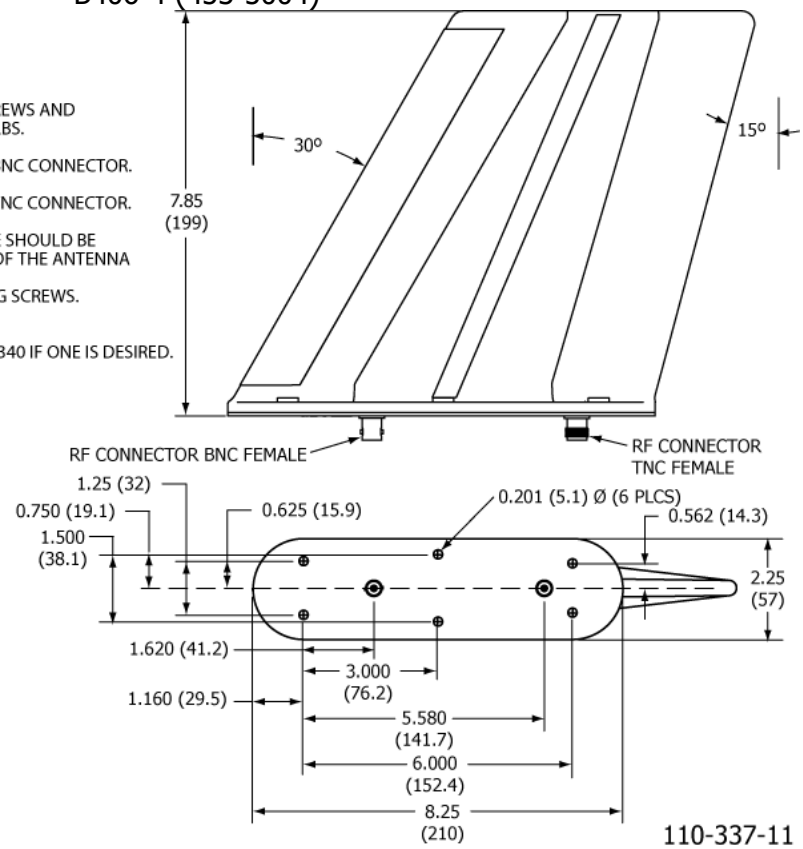

Dimensions in inches (mm)

Figure 17 Blade Antenna 110-337-11 Outline and Dimensions

TASK 25-62-03-450-803

4. Remote Switch Panel

SUBTASK 25-62-03-450-001

A. Location

NOTE: In most cases, panel space and wiring have been pre-provisioned by the aircraft manufacturer for the G737 control panel (remote switch panel assembly); however, location and installation requirements are defined for installations in aircraft not pre-provisioned for this remote switch panel.

1) The Control Panel G737 (453-0161) must be mounted in the cockpit where the pilot can easily reach the switch and see the status light.
2) The panel assembly requires a space approximately 5.74 x 2.24 in. (146 x 57 mm) on the panel or console surface, with a depth of 3.00 in. (77 mm), excluding room for the harness connection. See Figure 18 Remote Switch Panel Assembly Outline and Dimensions.

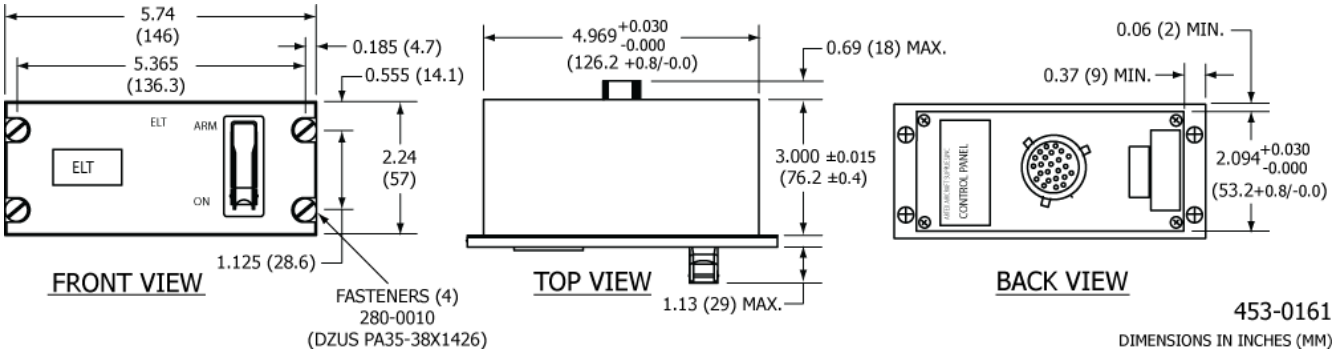

Figure 18 Remote Switch Panel Assembly Outline and Dimensions

SUBTASK 25-62-03-450-002

B. Installation

1) Provide an opening in the instrument panel or other mounting location which meets the dimensional requirements shown in Figure 18 Remote Switch Panel Assembly Outline and Dimensions.
2) Mount Dzus rails on the sides of the opening, if necessary. See Figure 18 Remote Switch Panel Assembly Outline and Dimensions for rail center line dimensions.
3) Install the remote switch panel assembly.

   NOTE: Step (3) may be completed after wiring is completed on the ELT end and the harness plug has been plugged into the panel assembly, in accordance with the requirements of SUBTASK 25-62-03-450-008 on page 58. If such is the case, perform a fit check at this time.

4) Apply a "For Aviation Emergency Use Only/Unauthorized Use Prohibited" placard as close to the switch as practical, if required.

   NOTE: This placard is recommended for installations on aircraft that are not pre-placarded for remote ELT control. If desired, the placard (591-0428) may be ordered from ACR Electronics.

TASK 25-62-03-450-804

5. Buzzer

SUBTASK 25-62-03-450-001

A. Location

CAUTION: PLACING THE BUZZER IN THE COCKPIT IS NOT RECOMMENDED DUE TO THE POTENTIAL FOR DISTRACTION. THE BUZZER PRODUCES A LOUD, SIREN-TYPE SOUND WHEN THE ELT IS ACTIVATED. SINCE THE BUZZER OPERATES IN TANDEM WITH THE COCKPIT LED, IT WOULD ONLY SERVE AS A REDUNDANT WARNING INDICATOR IN THE COCKPIT.

1) Select a suitable location for the buzzer.

NOTE: The buzzer may be located anywhere in the aircraft; however, the recommended location is near the ELT, as the buzzer is loud enough to be heard outside the aircraft when the engine(s) is not running. When the engine(s) is running, the LED on the cockpit remote switch panel will warn the pilot the ELT is active.

SUBTASK 25-62-03-450-002

B. Installation

1) Fabricate a bracket suitable for supporting the buzzer. See Figure 19 Buzzer Outline and Dimensions.

NOTE: Refer to the aircraft manufacturer's written instructions or AC 43.13-2, as applicable, for approved bracket fabrication and installation methods.

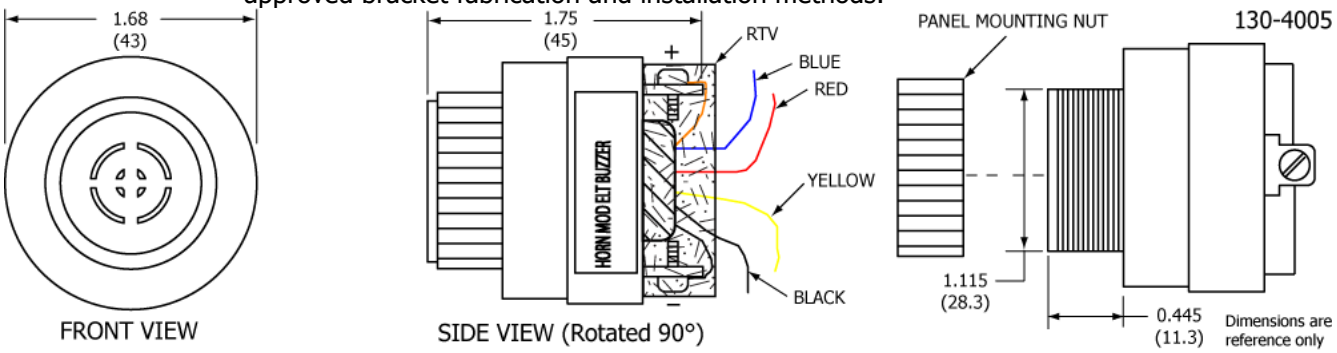

Figure 19 Buzzer Outline and Dimensions

2) Attach the bracket to the airframe such that the buzzer is adequately supported and does not show any significant evidence of distorting the airframe skin.
3) Install the buzzer in the bracket.
   a) Remove the panel mounting nut and insert the buzzer in the bracket.
   b) Install the panel mounting nut and tighten it securely.

TASK 25-62-03-450-805

6. Wiring

SUBTASK 25-62-03-990-001

A. General Considerations and Recommendations

CAUTION: IF GROUND OR OTHER CONNECTIONS ARE BROKEN OR OTHERWISE DAMAGED, THE ELT IS STILL CAPABLE OF AUTOMATIC ACTIVATION; HOWEVER, THE COCKPIT REMOTE SWITCH MAY BE INCAPABLE OF RESETTING THE ELT AND OPERATION MAY NOT BE INDICATED ON THE REMOTE SWITCH LED.

CAUTION: INCORRECT TERMINATION OF THE WIRING IN THE CONNECTORS MAY DAMAGE THE ELT, CAUSE TRANSMISSION ISSUES, OR RESULT IN A NON-FUNCTIONING REMOTE SWITCH. VERIFY THE WIRING AGAINST THE WIRING DIAGRAM AND PERFORM A CONTINUITY CHECK TO CONFIRM GOOD CONNECTIONS AND PROPER PIN LOCATIONS.

CAUTION: TO PREVENT INADVERTENT ELT ACTIVATION OR POSSIBLE COMPONENT DAMAGE, DO NOT CONNECT THE HARNESS TO THE ELT OR COCKPIT REMOTE SWITCH PANEL UNTIL ALL POWER AND GROUND WIRING CONNECTIONS ARE COMPLETED.

1) The following wiring and grounding considerations and recommendations are applicable:
   a) Minimum 22 AWG wire size.
   b) Shielding is recommended to help prevent EMI and RF interference.
   c) Use high quality conductor meeting MIL-W-16878, M22759, M27500, or a commercial equivalent acceptable for use in aircraft applications.
   d) Provide a "Drip Loop" in the remote switch harness connection to the ELT to divert moisture from the connector. See TASK 25-62-03-990-805 on page 14 for a definition.
   e) Provide a "Service Loop" in the remote switch harness connection to the remote switch panel, such that the assembly can be withdrawn from the panel far enough to easily disconnect the harness plug. See TASK 25-62-03-990-805 on page 14 for a definition.
   f) ELT and remote switch panel grounds must be common to aircraft ground.

SUBTASK 25-62-03-450-001

B. Remote Switch Panel Harness Fabrication and Installation

1) In most cases, the aircraft has been pre-provisioned with wiring for connecting the ELT to the G737 control panel (remote switch panel assembly). Install a remote switch panel harness in accordance with the following instructions ONLY if wiring has not been provided and/or spare wires are not available.

   NOTE: If spare wires are used, terminate the wires in accordance with Figure 20 Remote Switch Panel Harness Wiring Diagram on page 54, and the procedures herein.

   NOTE: If an ELT/NAV Interface -B (453-6501) is being installed with the ELT, refer to the "ELT/NAV Interface -B Description, Operation, Installation and Maintenance Manual" (570-6501) for additional wiring instructions.

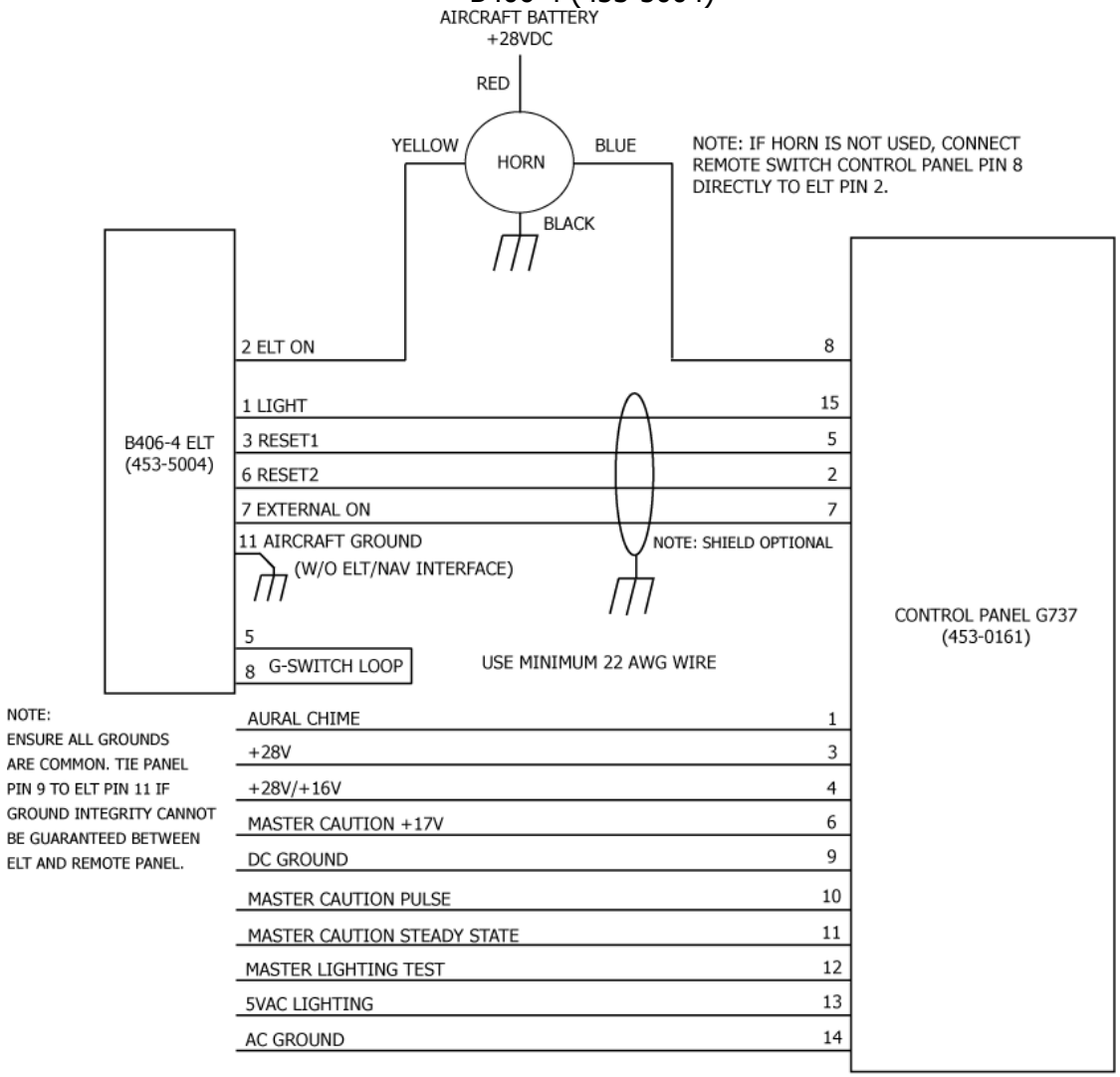

NOTE:
ENSURE ALL GROUNDS ARE COMMON. TIE PANEL PIN 9 TO ELT PIN 11 IF GROUND INTEGRITY CANNOT BE GUARANTEED BETWEEN ELT AND REMOTE PANEL.

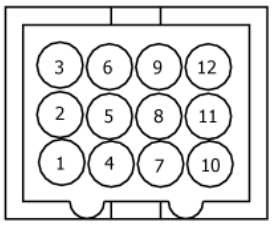

PIN INSERTION END OF MOLEX CONNECTOR FOR ELT. HOLE NUMBERING SAME AS INSCRIBED ON ACTUAL CONNECTOR.

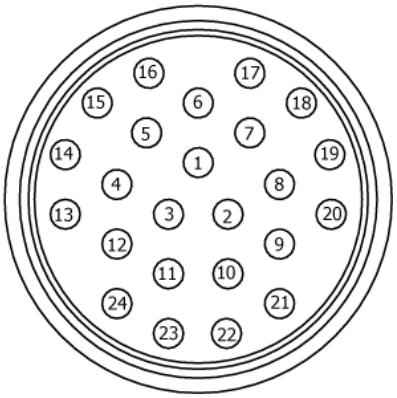

PIN INSERTION END OF MS24266R16B24S7 CONNECTOR FOR REMOTE PANEL ASSEMBLY. HOLE NUMBERING SAME AS INSCRIBED ON ACTUAL CONNECTOR.

Figure 20 Remote Switch Panel Harness Wiring Diagram

2) Fabricate a 4-wire harness long enough to reach from the ELT to the cockpit remote switch panel, allowing enough slack to provide a drip loop at the ELT end and a service loop at the cockpit remote switch panel end.

   NOTE: A 5 or 6-wire harness may be necessary if a ground wire is connected between ELT Pin 11 and remote switch panel Pin 9; and/or ELT Pin 2 must be connected to remote switch panel Pin 8 if a horn is not installed. See Figure 20 Remote Switch Panel Harness Wiring Diagram on page 54.

   a) Strip approximately 0.15 in. (3 mm) of insulation from the ends of each of the harness wires.
   b) Dress and tin the bare wires to prevent the strands from fraying during terminal crimping operations.

3) Fabricate the additional wires needed to connect the remote switch panel; referring to Figure 20 Remote Switch Panel Harness Wiring Diagram on page 54, and the aircraft wiring diagrams to determine appropriate connection points.
   a) Pin 3 to the selected +28V aircraft power source.
   b) Pin 4 to the selected +28V/+16V aircraft power source.
   c) Pin 6 to the Master Caution +17V circuit.
   d) Pin 8 to the BLUE wire on the buzzer (i.e., horn).
   e) Pin 9 to aircraft ground.
   f) Pin 10 to the Master Caution Pulse circuit.
   g) Pin 11 to the Master Caution Steady State circuit.
   h) Pin 12 to the Master Lighting Test circuit.
   i) Pin 13 to the 5VAC Lighting circuit.
   j) Pin 14 to aircraft ground.
   k) Prepare the wires as described in Steps (2)(a) and (2)(b).

4) Terminate the remote switch panel end of all wires in an MS24266R16B24S7 connector in accordance with the aircraft manufacturer's written instructions or AC43.13-1, as applicable. See Figure 20 Remote Switch Panel Harness Wiring Diagram on page 54.

   NOTE: Identify the wires and connector pin relationships, such that the wiring can be terminated at the appropriate locations.

5) Install the remote switch panel harness as follows:
   a) Bundle the wiring into a complete harness, with breakouts as appropriate, such that the wiring can be properly supported and attached to the airframe. Refer to the aircraft manufacturer's written instructions or AC 43.13-1, Chapter 11, § 9 through 12, as applicable.
   b) Route the wire bundle through the airframe.
   c) Support the wire bundle by clamping or other suitable means, such that the wiring is properly supported and protected from chaffing and strain. Refer to the aircraft manufacturer's written instructions or as described in AC 43.13-1, Chapter 11, § 9 through 12, as applicable.

6) Terminate the aircraft side of the wires fabricated in Step (3) at the appropriate connection points in accordance with the aircraft manufacturer's written instructions or AC 43.13-1, as applicable. See Figure 20 Remote Switch Panel Harness Wiring Diagram on page 54 and aircraft wiring diagrams.

7) Refer to SUBTASK 25-62-03-450-003 for wire termination instructions at the ELT end of the remote switch panel harness.

SUBTASK 25-62-03-450-002

C. Buzzer Wiring Fabrication

1) Fabricate the following wires, which correspond with the wires on the buzzer:

   NOTE: Use appropriately coded wires, such that the wires can be identified and terminated at the appropriate locations.

   a) YELLOW wire to harness ELT receptacle.
   b) BLACK wire to aircraft ground.
   c) RED wire to +28VDC aircraft battery power source.
   d) BLUE wire to Pin 8 of the remote switch panel connector.
   e) Strip approximately 0.15 in. (3 mm) of insulation from the ends of each of the harness wires.
   f) Dress and tin the bare wires to prevent the strands from fraying during terminal crimping operations.

2) Splice the fabricated wires to the buzzer wires in a manner acceptable to the aircraft manufacturer, or as described in AC 43.13-1, Paragraph 11-167, as applicable.
3) Support the wiring by clamping or other suitable means, such that the wiring is properly supported and protected from chaffing and strain. Refer to the aircraft manufacturer's written instructions or as described in AC 43.13-1, Chapter 11, § 9 through 12, as applicable.

SUBTASK 25-62-03-450-003

D. ELT 12-Pin Receptacle Wiring Fabrication and Installation

1) Fabricate a ground wire long enough to reach from the harness ELT receptacle to aircraft ground.

   NOTE: This wire will be crimped in the same pin as the wire running from Pin 11 of the ELT receptacle to the cockpit remote switch panel, ONLY if a ground wire is connected between the ELT and the remote switch panel. Alternatively, the wires may be spliced in a manner acceptable to the aircraft manufacturer, or as described in AC 43.13-1, Paragraph 11-167, as applicable.

2) Feed the harness wires on the ELT end through the mounting frame cap assembly (452-5052). See Figure 21 Remote Switch Panel Harness Wiring at ELT End on page 57.

   NOTE: Prior to installing the 12-pin ELT receptacle onto the harness, the wires connecting to the ELT must be routed through the rectangular hole in the ELT mounting frame cap. The cap retains the receptacle when installed and the receptacle will not fit through the mounting cap harness entrance.

3) Feed the buzzer wire (YELLOW) on the ELT end through the mounting frame cap.
4) Fabricate a short jumper, approximately 1.5 in. (38 mm) long, using minimum 22 AWG wire.
   a) Strip approximately 0.15 in. (3.3 mm) of insulation from both ends of each of the wire.
   b) Dress and tin the bare wire ends to prevent the strands from fraying during terminal crimping operations.

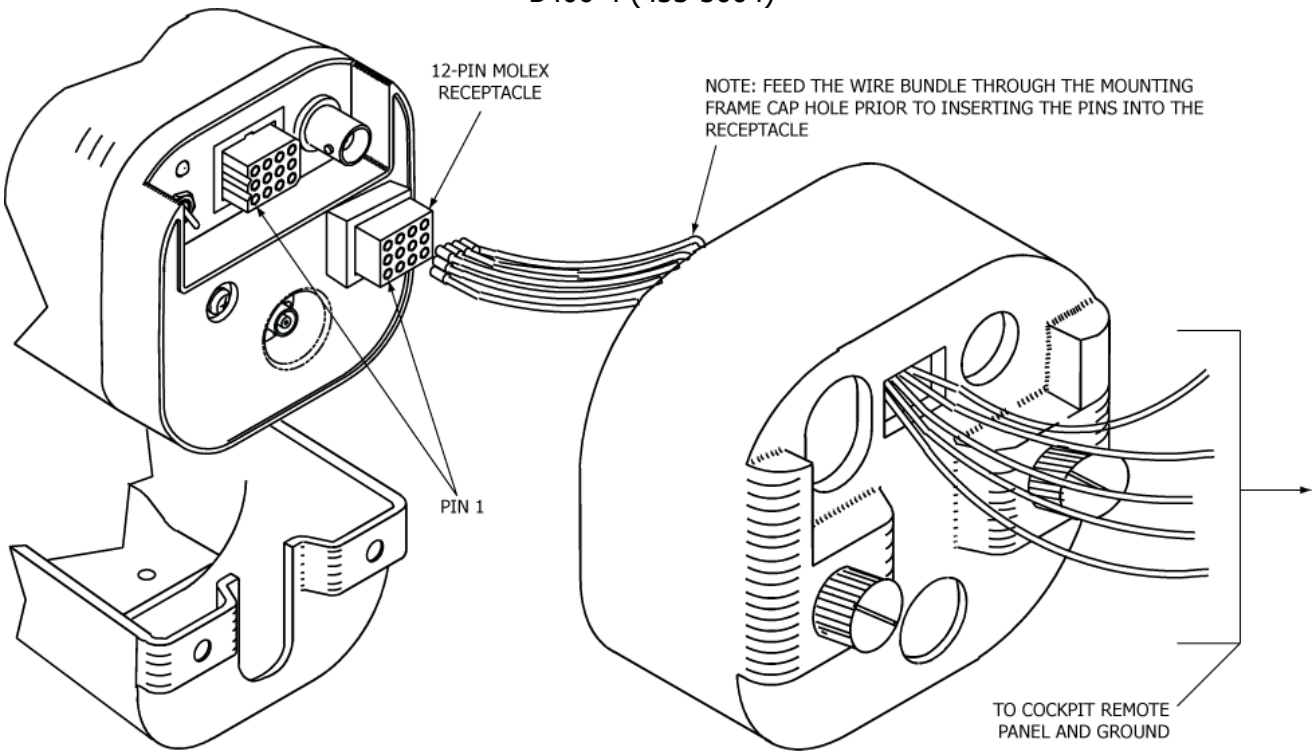

Figure 21 Remote Switch Panel Harness Wiring at ELT End

5) Crimp male terminal pins (151-6627) to each of the wire ends, using Molex crimp tool 63811-3300, or an equivalent tool for 0.062 in. terminal pins.
6) Insert the terminal pins in the harness ELT Molex 12-pin receptacle (151-5012), as follows. See Figure 20 Remote Switch Panel Harness Wiring Diagram on page 54.

   CAUTION: THE ELT WILL NOT AUTOMATICALLY ACTIVATE IF THE JUMPER (G-SWITCH LOOP) IS NOT PROPERLY INSTALLED IN THE HARNESS ELT RECEPTACLE.

   a) Insert the jumper ends in Pin 5 and Pin 8 of the receptacle.

   NOTE: Terminal pins may be removed from the receptacle using Molex extraction tool 11030002, or equivalent.

   b) Insert the harness ELT wire ends into the receptacle. See Figure 20 Remote Switch Panel Harness Wiring Diagram on page 54.
   c) Ring out the wiring between the remote switch panel and the ELT, verifying proper continuity.
   d) Insert the buzzer wire (YELLOW) in Pin 2 of the receptacle.

SUBTASK 25-62-03-450-004

E. Coax Cables Installation

1) Route the two antenna coax cables through the airframe.

   NOTE: Cables, up to 20 feet (6.1 m), may be fabricated. Use RG-142 or RG-400 coax cable.

2) Support the coax cables by clamping or other suitable means, such that they are properly supported and protected from chaffing and strain. Refer to the aircraft manufacturer's written instructions or as described in AC 43.13-1, Chapter 11, § 9 through 12, as applicable.

SUBTASK 25-62-03-450-005

F. Antenna Connections

1) Connect the two coax cables to the antenna, making sure the cables are routed and supported, such that there is no tensile load (i.e., strain) on the connections.

SUBTASK 25-62-03-450-006

G. Airframe Ground Connections

1) Connect the ground wires to the airframe in accordance with the aircraft manufacturer's written instructions or as described in AC 43.13-1, Chapter 11, § 15, as applicable. See Figure 20 Remote Switch Panel Harness Wiring Diagram on page 54.

SUBTASK 25-62-03-450-007

H. Buzzer Connections

1) Connect the RED wire to the +28 VDC aircraft battery power source.
2) Connect the BLUE wire to remote switch panel plug Pin 8.
3) Connect the YELLOW wire to ELT receptacle Pin 2.
4) Connect the BLACK wire to aircraft ground. See SUBTASK 25-62-03-450-006 above.

SUBTASK 25-62-03-450-008

I. Remote Switch Panel Final Installation

1) Connect the remote switch panel harness plug the remote switch panel.
2) Install the remote switch panel assembly, referring to SUBTASK 25-62-03-450-001 on page 53.

TASK 25-62-03-410-802

7. ELT Installation

SUBTASK 25-62-03-410-001

A. Installation and Test

1) See Figure 22 ELT Installation Sequence.

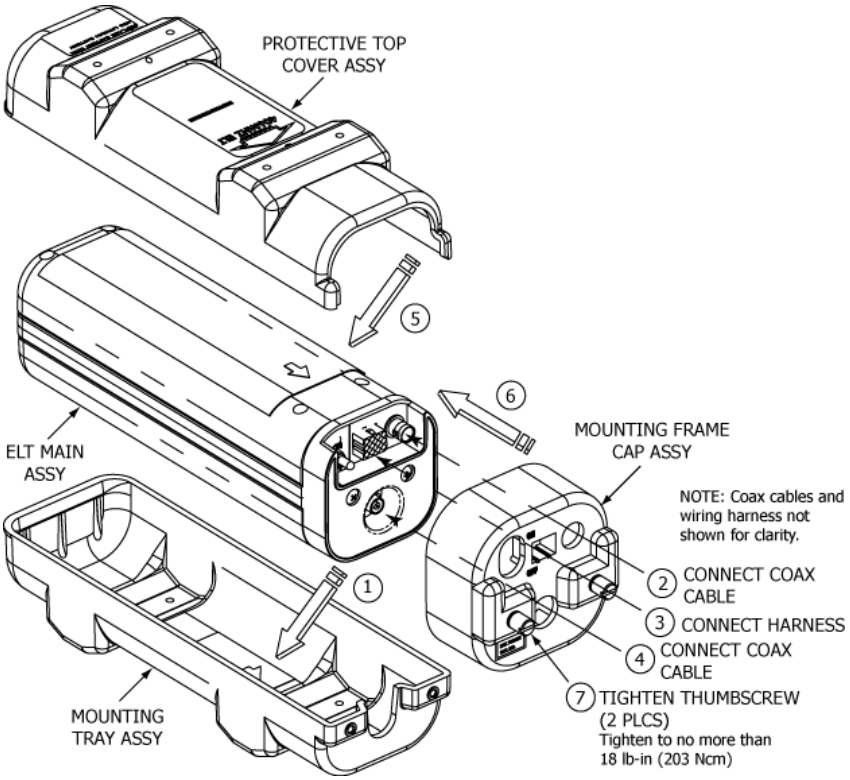

Figure 22 ELT Installation Sequence

2) Verify the ELT local switch is in the "OFF" position.
3) Insert the ELT into the mounting tray at an angle, such that the locking ears at the end opposite the direction-of-flight arrow fit into the mounting tray locking slots.
4) Press the ELT down until it is fully seated in the mounting tray.
5) Install the protective top cover assembly (452-3052) on the ELT by fitting the cover locking slots over the locking ears on the ELT.
6) Push the cover toward the connector end of the ELT and seat it down in place on the ELT.
7) Route the antenna coax cables through the appropriate mounting frame cap access holes.
8) Connect the antenna coax cables to the ELT.
9) Connect the 12-pin harness receptacle to the ELT.
10) Slide the mounting frame cap into place over the mounting tray and protective top cover.
11) Secure the mounting frame cap to the mounting tray with the thumbscrews and tighten them to no more than 18 lb-in (203 N•cm).
12) Tie up excess slack in the harness and coax cables, such that they form drip loops and there is enough slack, approximately 5 in. (127 mm), to allow the mounting frame cap to be easily pulled back.

NOTE: Steps (1) through (11) are applicable any time the ELT has been removed and undergoes reinstallation. Step (12) is only applicable at initial installation or if the wiring and/or coax cables have been disturbed.

13) Test the ELT installation in accordance with the requirements of SUBTASK 25-62-03-750- on page 35.

NOTE: It is very important that the cockpit remote switch panel light illuminates immediately upon ELT activation. If the light fails to illuminate immediately and stay on steady, recheck the interface wiring and connections between the ELT and the remote switch panel. The ELT local LED flashes every 3-4 seconds.

NOTE: If verification of the digital message (i.e., 406 MHz Burst) is desired, follow the procedures outlined in SUBTASK 25-62-03-750- on page 34.

SUBTASK 25-62-03-450-001

B. Harness ELT Receptacle Sealing

1) Seal the harness receptacle at the ELT end to prevent moisture from penetrating the connection, thus preventing water from beading up and causing bridging between connector pins resulting in possible activation of the ELT. Use the following procedure:

NOTE: Perform the sealing process once all tests have been satisfactorily completed and all harness connections have been verified to be correct.

a) Remove the mounting frame cap from the ELT.
b) Unplug the receptacle from the ELT or pull the receptacle free of the mounting frame cap, as applicable.
c) Seal the back of the receptacle with GE RTV 162, or equivalent, such that moisture cannot penetrate the backside of the receptacle around the terminal pins.
d) Apply Dow Corning® 4 Electrical Insulating Compound, or an equivalent meeting MIL-S-8660C, around the receptacle pins, such that the pin area is filled with compound.
e) Plug the harness receptacle into the ELT.
f) Wipe up excess sealing compound.
g) Reinstall the mounting frame cap torquing the thumbscrews to no more than 18 lb-in. (203 N•cm).

SUBTASK 25-62-03-410-002

C. Installation Documentation

1) Make appropriate logbook (i.e., aircraft records) entries and submit FAA Form 337, along with any supporting data required by the FAA for approval of the installation, as applicable.

NOTE: Refer to TASK 25-62-03-410-801 on page 43 for additional information on installation approvals.

2) In countries other than the United States, make appropriate aircraft records entries and submit documentation as required for installation approval in accordance with national regulatory authorities.

TASK 25-62-03-450-806

8. Battery Pack Installation

SUBTASK 25-62-03-450-001

A. Battery Reinstallation

CAUTION: THE BATTERY PACK CONTAINS ELECTROSTATIC DISCHARGE SENSITIVE (ESD) COMPONENTS AND IT MUST BE HANDLED WITH CARE. IF POSSIBLE, WEAR A GROUNDED WRIST STRAP WHEN HANDLING THE BATTERY PACK DURING INSTALLATION ACTIVITIES. TAKE PARTICULAR CARE TO AVOID TOUCHING THE EXPOSED CIRCUIT BOARD AND CONNECTOR PINS ON THE BOARD.

This subtask applies to reinstallation of an existing battery that was removed for inspection and testing.

1) See Figure 23 Battery Pack Installation for exploded of the ELT and battery pack.

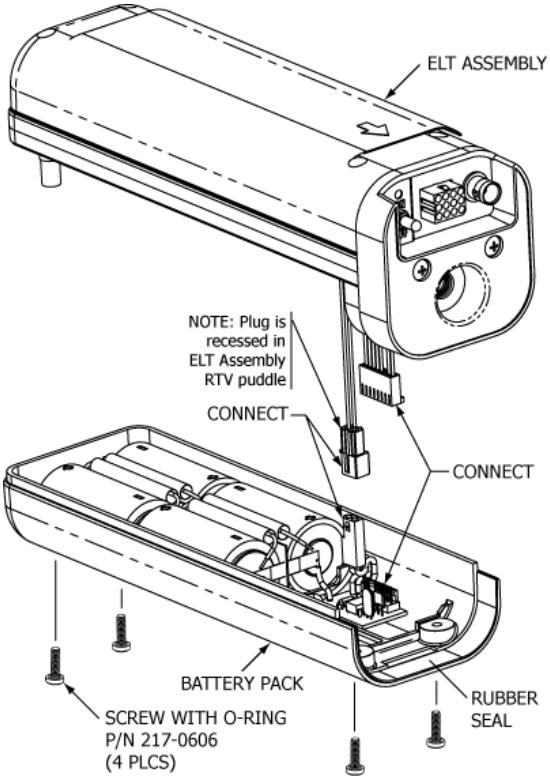

Figure 23 Battery Pack Installation

2) Apply a thin coating of non-petroleum based silicone grease, such as GE G-635, to the rubber seal to facilitate installation and allow the ELT and battery pack to slide together without binding on the rubber seal.

NOTE: Inspect gasket for wear and tear, or damage prior to installation.

3) Lay the battery pack and ELT on their sides, such that the two components are aligned, but separated enough to allow the electrical connections to be made.

4) Connect the ELT lead 8-pin connector to the header on the battery pack circuit board.
5) Connect the power harness 2-pin connector to the recessed connector inside the ELT body.
6) Reset the ELT by toggling the ELT local control switch to "ON" and back to "OFF" after 1-2 seconds.

   NOTE: This step is necessary because the ELT will occasionally activate when power is connected to it in Step 6.
7) Fit the battery pack into place on the ELT, while dressing the wires away from the standoffs to avoid pinching the wires between the standoffs and battery pack.
8) Turn the battery pack bottom face up to facilitate installing the screws, while securely holding the ELT and battery pack together.

NOTE: **For a proper seal, ensure the battery pack is flush in the channel. Verify that all four (4) screws and their integrated O-rings are present and in good condition before proceeding to Step 9.**

If a screw or O-ring is missing or damaged, replace it with P/N 217-0606 or equivalent (SS 6-32 x 1/2" Sealing Phillips Pan Head Screw with Silicone O-Ring).

9) Install the four battery pack retaining screws about half way (i.e., leave them loose).
10) Tighten and torque the screws as shown in Figure 24 Battery Pack Retaining Screw Tightening Pattern. Torque to 6-8 lb-in (68-90 N•cm).

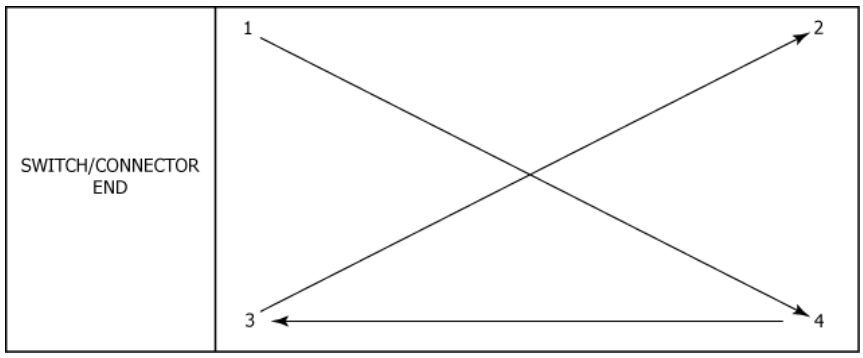

Figure 24 Battery Pack Retaining Screw Tightening Pattern

11) Perform an ELT self-test as follows:
    a) Set the ELT local control switch in the "ON" position. The LED will begin flashing every 3-4 seconds.
    b) Return the switch to the "OFF" position after 1-2 seconds. If the ELT is working properly, the LED will stay on for approximately 1 second and then flash the following expected error codes, which should be ignored.
        6. 1-flash and 3-flash errors, which are generated because the ELT is not installed and connected to an antenna, etc.
        7. A 5-flash error will be indicated if the ELT is programed with a location protocol, and is generated because the ELT is not connected to the navigation system and receiving position data.
    c) If a 7-flash error code is indicated, there is a problem with the battery or battery connection wiring. Refer to Table 6 on page 38.

SUBTASK 25-62-03-450-002

B. New Battery Installation

CAUTION: DO NOT USE CONTACT CLEANER ON ELT COMPONENTS. SUCH CHEMICAL AGENTS CAN BE HIGHLY DESTRUCTIVE TO THE MOUNTING HARDWARE AND ELT HOUSING, CAUSING CRACKING, FRACTURING AND OTHER DAMAGE.

1) This subtask applies to installation of a new (i.e., replacement) battery.
2) Verify the bottom of the ELT is clean and free of battery corrosion residue. Clean as necessary.

   NOTE: Remove the paper backing from the rubber seal at the connector end of the battery pack, if present.
3) Perform the procedure outlined in SUBTASK 25-62-03-990-002.
4) Place a new battery expiration date label on the ELT mounting frame cap or other visible location.

   NOTE: The new label is supplied with the new battery pack.
5) Enter the pertinent battery replacement information in the logbook (i.e., aircraft records) and fill out any other required documentation.

APPENDIX A – ELT REGISTRATION

TASK 25-62-03-990-801

1. Background Information

SUBTASK 25-62-03-990-001

A. Hex ID Code

1) Each 406 MHz ELT is programmed with a unique hex ID code (i.e., registration code) that is transmitted to the SAR satellite system. At a minimum, this code provides information regarding:
   a) Unique aircraft or ELT identification,
   b) Country of origin, and
   c) Latitude and longitude position data, if equipped with a navigation interface device.

SUBTASK 25-62-03-990-002

B. Reason for Registration

1) ELT registration aids the Rescue Coordination Center (RCC) in determining if an actual emergency exists by accessing a database containing the registration information, which facilitates inquiries as to the whereabouts of the aircraft, existence of a flight plan, etc.
   a) Owner's name,
   b) Address,
   c) Telephone number,
   d) Aircraft type, and registration number.

SUBTASK 25-62-03-990-003

C. Registration Information Resources

1) Refer to COSPAS-SARSAT documents G.005 and S.007 for information regarding ELT programming and registration. These documents are available at http://www.cospas-sarsat.org/index.php?option=com_content&view=article&id=234&Itemid=212&lang=en.

TASK 25-62-03-990-802

2. Registration

SUBTASK 25-62-03-990-001

A. Responsibility

1) It is the responsibility of the aircraft owner to register the ELT.
   a) If an ELT is moved to a different aircraft (i.e., an aircraft other than the one it was originally installed on), and/or the aircraft is registered in a new country, the ELT must be re-registered.
   b) If the aircraft is registered in a new country, the ELT must be re-registered.
   c) The product label must re-marked with the new HEX ID code to indicate new programming, if applicable.

SUBTASK 25-62-03-990-002

B. Required Information

1) The following information is required when registering an ELT:
   a) The unique Hex ID code printed on the ELT product label,
   b) The information listed in SUBTASK 25-62-03-990-002.
2) The information (i.e., address, telephone number, etc.), filed as part of the registration process, should be kept up to date.

SUBTASK 25-62-03-990-003

C. Where to Register

1) In the United States, the National Oceanic and Atmospheric Administration (NOAA) is the registration agency.
2) Specific registration web sites and information may be found at:
   a) The Artex products web site at www.acrartex.com, which has links to online registration sites and also a link to registration forms and instructions for a number of countries.
   b) An ELT may also be registered in the United States by going directly to the NOAA ELT registration web site at www.beaconregistration.noaa.gov.

   NOTE: NOAA may also be contacted by mail at:

US MAIL ONLY	FEDEX OR UPS ONLY
SARSAT Beacon Registration	SARSAT Beacon Registration
NSOF, E/SPO53	NSOF, E/SPO53
1315 East West Highway	4231 Suitland Road
Silver Spring, MD 20910-9684	Suitland, MD 20746-4304

or by phone at 1-888-212-7283 or 301-817-4565.

3) In other countries, the national civil aviation authority in the applicable country should be contacted to obtain registration information.

ILLUSTRATED PARTS LIST

TASK 25-62-03-990-801

1. Introduction

SUBTASK 25-62-03-990-001

A. Purpose

1) This illustrated parts list (IPL) illustrates and lists the spare parts, with attaching hardware, applicable to the B406-4 ELT.
2) Parts and components not listed herein, are not field replaceable and ELT repairs requiring parts outside the scope of this manual must be accomplished by the manufacturer.

SUBTASK 25-62-03-990-002

B. IPL Usage Guide

1) If the part number is not known:
   a) Find the part in the IPL Figure illustration.
   b) Note the item number assigned to the part.
   c) Refer to the associated parts list and find the item number in the "Fig # & Item" column.
2) If the part number is known:
   a) Refer to the parts list and find the part in the "Part #" column.
   b) Note the figure number and item number assigned to the part.
   c) Refer to the illustration in the applicable IPL figure to find attaching hardware and related assembly parts.
3) In cases where multiple item numbers are shown on an illustration for the same item, there is more than one part number option associated with that item.

TASK 25-62-03-990-802

2. Manufacturer Name and Address

SUBTASK 25-62-03-990-001

A. Ordering Information

1) Approved parts may be ordered from ACR Electronics or any authorized dealer.

CONTACT INFORMATION

Sales, ACR Electronics, Inc / Artex Products

5757 Ravenswood Rd

Fort Lauderdale, FL 33312-6645, USA

Phone: (954) 981-3333

Fax: (954) 983-5087

TASK 25-62-03-990-803

3. Explanation of Detailed Parts List Entries

SUBTASK 25-62-03-990-001

A. Fig # & Item Column

1) The first number at the top of the column is the figure number of the corresponding illustration.
2) The right hand number is the item number in the associated figure.
3) A dash (–) in front of an item means the part is not illustrated.
4) Alpha-variants A through Z (except I and O) are assigned to item numbers, when necessary to identify added parts, alternate parts, and service bulletin modified parts.

SUBTASK 25-62-03-990-002

B. Part # Column

1) This column contains the manufacturer's part number for each part.

SUBTASK 25-62-03-990-003

C. Nomenclature Column

1) This column contains descriptive nomenclature for each part, service bulletin numbers affecting the part, and obsolete part numbers.
2) The indenture system used in the "Nomenclature" column indicates the relationship of one part to another, as follows:

1 2 3

End Item or Major Assembly

ATTACHING PARTS

Attaching Parts for End Item or Major Assembly

***

. Detail Parts for End Item or Major Assembly

. Subassemblies

ATTACHING PARTS

. Attaching Parts for Subassemblies

***

. . Detail Parts for Subassemblies

ATTACHING PARTS

. . Attaching Parts for Detail Parts

***

3) Assemblies, subassemblies, and detail parts subject to modification, deletion, addition, or replacement by an issued service bulletin, are annotated to indicate both pre- and post-service bulletin configurations. The term (PRE SB 2828) in the "Nomenclature" column designates the original configuration, and the term (POST SB 2828) identifies assemblies and parts after the modification has been completed.
4) The terms defined below are used when applicable to indicate the interchangeability of parts.

TERM	ABBREVIATION	DEFINITION
Alternate	ALT	The listed part is alternate to, and interchangeable with, other parts within the same item number variant group or other item numbers if designated.
Superceded By	SUPSD BY	The part is replaced by and is not interchangeable with the item number designated in the notation.
Supersedes	SUPSDS	The part replaces and is not interchangeable with the item number designated in the notation.
Replaced By	REPLD BY	The part is replaced by and is interchangeable with the item number designated in the notation.
Replaces	REPLS	The part replaces and is interchangeable with the item number designated in the notation.

SUBTASK 25-62-03-990-004

D. UPA (Units Per Assembly) Column

1) The quantity shown in this column represents the units required for one next higher assembly or, when referring to attaching parts, the quantity to attach one such item.
2) The abbreviation RF (reference) indicates the end item assembly is listed for reference purposes.

TASK 25-62-03-990-804

4. Detailed Parts List

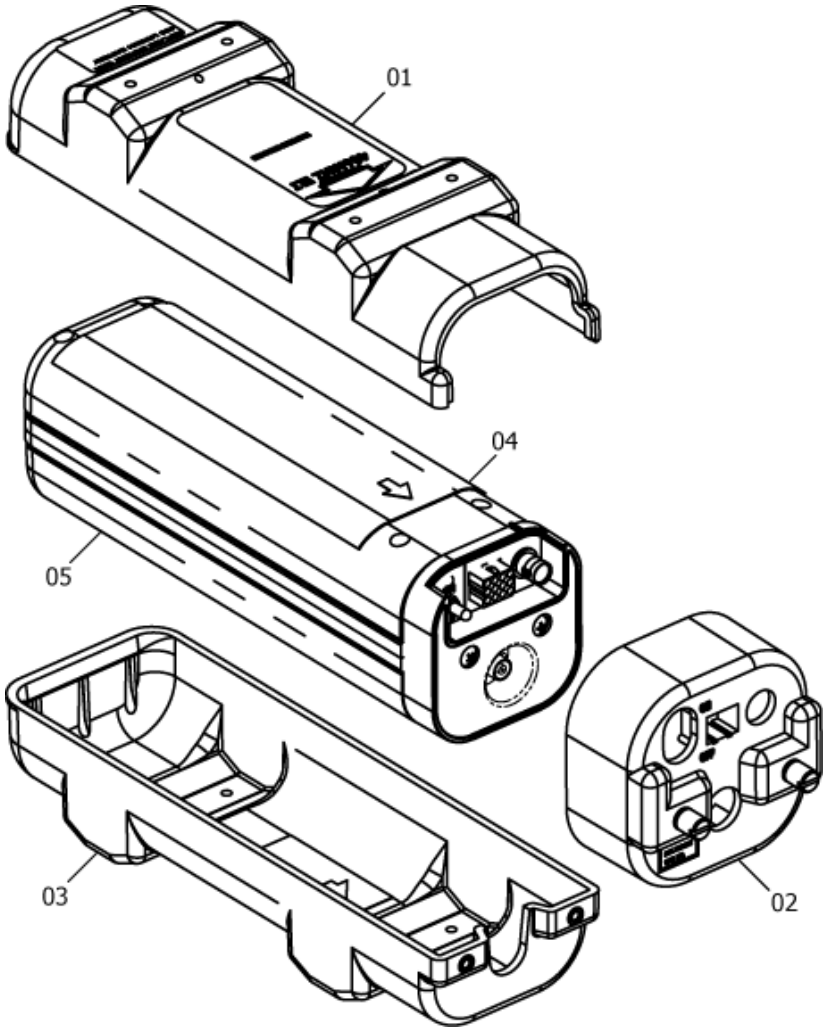

Figure 25 B406-4 ELT Main Assembly and Installation

FIG #	ITEM	PART #	1234 NOMENCLATURE	UPA
24	01	452-3052	Protective Top Cover Assembly	1
	02	452-5052	Mounting Frame Cap Assembly	1
	03	452-5050	Mounting Tray Assembly	1
			ATTACHING PARTS	
	–	201-0810	Screw, PHP 8-32 x 5/8” SS	4
	–	246-0008	Washer, Flat 1/2” SS #8	4

–	247-0800	Washer, Lock Internal Tooth SS #8	4
–	241-0832	Nut, 8-32 x 1/4” Hex SS	4
		***	
04	453-5004	B406-4 Main Assembly	1
		***	
–	591-0999	. Label, Hex Code	1
–	591-0429	. Label, Country Code	1
		***	
05	452-0133	. 406 Lithium Battery Pack	1
		ATTACHING PARTS	
–	217-0606	. Screw, with O-Ring	4
		***	

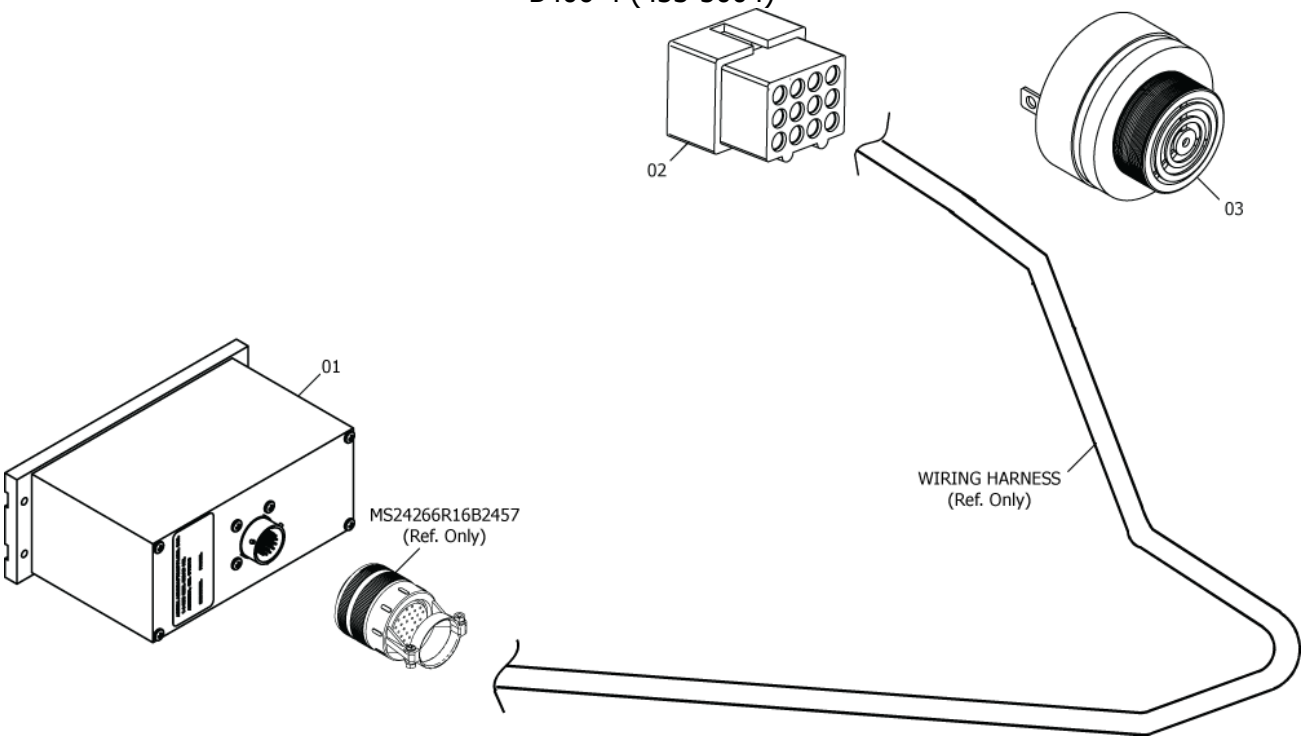

Figure 26 Electrical Components

FIG #	ITEM	PART #	1234 NOMENCLATURE	UPA
25	01	453-0161	Control Panel G737	1
			***	
	–	591-0428	. Label, ELT Cautionary Use Advisory (Optional)	1
			***	
	02	151-5012	Receptacle, 12-Pin	1
			***	
	–	151-6627	. Terminal, Crimp Male 0.062 Dia.	12
			***	
	03	130-4005	Horn Mod ELT Buzzer	1
			***	

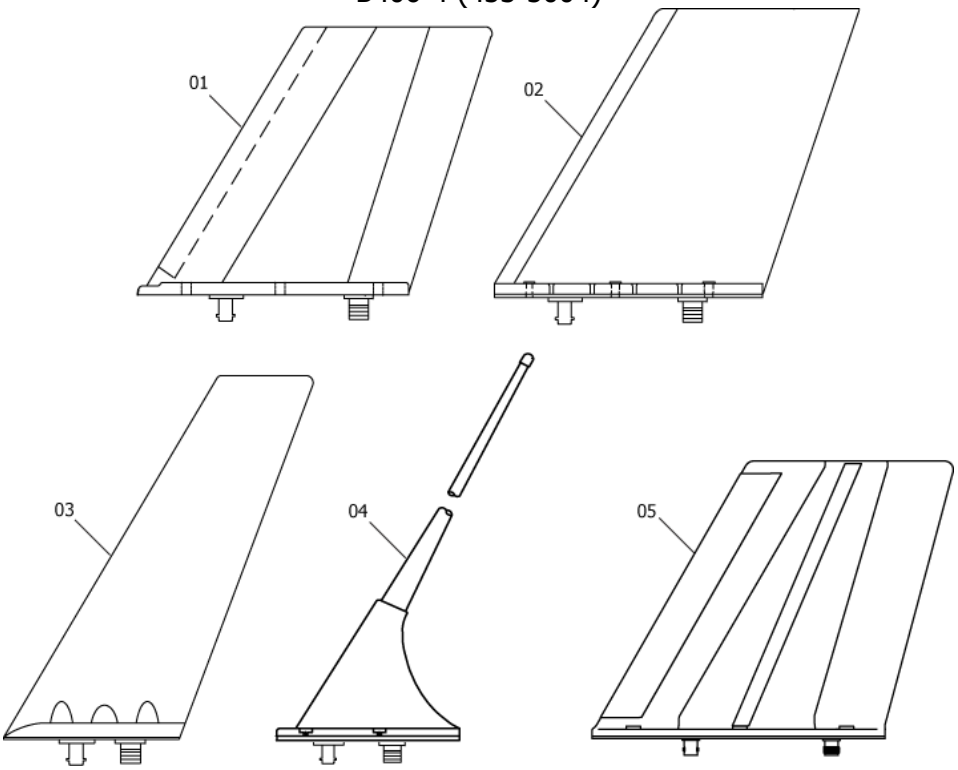

Figure 27 Antennas

FIG #	ITEM	PART #	1234 NOMENCLATURE	UPA
26	01	110-337	Antenna, 406 Blade (319 Dual Input)	1
	02	110-328-01	Antenna, 406 Blade (Dual Input)	1
	03	110-333	Antenna, Tri-Band Blade, White (Dual Input)	1
	04	110-320	Antenna, Tri-Band Rod (Dual Input)	1
	05	110-337-11	Antenna, 406 Blade w/prot edge	1
			***	
	–	611-6013-04	. Cable, Coax BNC to BNC (6 ft.)	1
	–	611-6052	. Cable Coax TNC to TPS (6 ft.)	1
			***	