ARTEX ELT C406-N / ARTEX ELT C406-N HM
Emergency Locator Transmitter

Description, Operation, Installation and Maintenance Manual
570-5060 Rev. AC
ATA #25-62-13

ARTEX PRODUCTS / ACR ELECTRONICS, INC.
5757 Ravenswood Rd, Ft. Lauderdale, FL 33312
Phone (954) 981-3333, Fax (954) 983-5087
www.acrartex.com

ARTEX PRODUCTS / ACR ELECTRONICS, INC.
DESCRIPTION, OPERATION, INSTALLATION AND MAINTENANCE MANUAL
C406-N / C406-N HM

This manual includes data for the following equipment:

Component	**Part No.**	**Model No.**
Emergency Locator Transmitter	453-5060	C406-N
Emergency Locator Transmitter	453-5061	C406-N HM

NOTICES

THE INFORMATION CONTAINED HEREIN IS NOT PROPRIETARY.

Information in this manual is subject to change without notice. ACR Electronics, Inc. makes no warranty, expressed or implied, with regard to this manual, including but not limited to any implied warranties of merchantability, fitness for a particular purpose, and non-infringement. In addition, ACR Electronics, Inc. makes no warranty with regard to the documentation or data contained herein. ACR Electronics, Inc. is not liable in the event of incidentals, special, consequential, or any other damages in connection with or arising from furnishing, performance, or use of this manual.

For further information contact Sales, ACR Electronics Inc., 5757 Ravenswood Rd, Fort Lauderdale, FL 33312. Telephone (954) 981-3333.

AIRWORTHINESS LIMITATIONS

The Airworthiness limitations section is FAA approved and specifies inspections and other maintenance required under 14 CFR§ 43.16 and 91.403, unless an alternative program has been approved.

IMPORTANT NOTICE

ACR Electronics, Inc. will be responsible for full distribution and revisions of ICA's (Instructions for Continued Airworthiness). For inquiries regarding the content and currency of this manual, contact ACR Electronics Inc., 5757 Ravenswood Rd, Fort Lauderdale, FL 33312. Telephone (954) 981-3333.

TABLE OF CONTENTS

TABLE OF CONTENTS 3

LIST OF ACRONYMS, ABBREVIATIONS AND DEFINITIONS 7

LIST OF FIGURES 9

RECORD OF REVISIONS 11

SERVICE BULLETIN LIST 12

LIST OF EFFECTIVE PAGES 13

INTRODUCTION 15
- 1. Manual Usage 15
  - A. General 15
  - B. Application 15
- 2. Model Descriptions 15
  - A. C406-N 15
  - B. C406-N HM 16
- 3. Approvals 16
  - A. C406-N and C406-N HM 16
  - B. Battery 16
  - C. RTCA DO-160D Compliance 17
- 4. Frequency Allocations 18
  - A. Application 18
  - B. Discussion 18
- 5. References 18
  - A. Regulatory Documents 18
  - B. Other Documents 19

DESCRIPTION AND OPERATION 20
- 1. Description 20
  - A. Functional Overview 20
  - B. Components 21
- 2. Operation 24
  - A. Operational Overview 24
  - B. Normal Operation 25
  - C. Manual Activation 25
  - D. ELT Reset 25
  - E. Functional Check 25
- 3. Specifications 26
  - A. Environmental and Physical 26
  - B. Electrical 27
  - C. Antennas 28

TEST AND FAULT ISOLATION 29
- 1. Inspection and Test Regulatory Requirements 29
  - A. United States 29

B. Canada 29
C. Other Countries 29
2. Inspection and Test Procedures 30
A. Checklist 30
B. Preparation 30
C. Coax Cable and Wiring Connections Inspection – Item 1 31
D. ELT Mounting Tray and Hardware Inspection – Item 2 31
E. Battery Pack Inspection – Item 3 31
F. G-Switch Functional Check – Item 4a 32
G. G-Switch Functional Check (Helicopter Models Only)– Item 4b 32
H. Performance Testing Setup 33
I. 121.5 MHz Frequency Measurement – Item 5a 34
J. Audio Modulation Check – Item 5b 34
K. 121.5/243.0 MHz Power Output Measurement – Item 5c 34
L. 406 MHz Frequency Measurement – Item 5d 34
M. 406 MHz Power Output Measurement – Item 5e 35
N. Current Draw Test – Item 5f 35
O. Digital Message Verification – Item 5g 36
P. ELT Reset Check – Item 5h 38
Q. Installed Transmitter Test – Item 6 38
R. Antenna Test – Item 7 39
S. Inspection and Test Documentation – Item 8 39
3. Fault Isolation 40
A. Self-Test Error Troubleshooting Guidelines 40
B. ELT Troubleshooting Guidelines 42

REMOVAL 43
1. ELT 43
A. ELT Removal 43
2. Battery 44
A. Battery Pack Removal 44
3. Material or Equipment Return 45
A. Shipment Information 45
B. Return Material Authorization 45

INSTALLATION 46
1. Regulatory Requirements and Guidelines 46
A. For US Registered aircraft: 46
B. TSO C126, Paragraph D 46
C. FAA 46
D. Canada 47
E. Other Countries 47
F. RTCA 47
2. Mounting Tray 48
A. Location 48
B. Installation 50
3. Antenna 51
A. Selection 51
B. Location 51
C. Installation 51
4. Remote Switch 54

A. Location 54
B. Installation 54
5. Buzzer 55
A. Location 55
B. Installation 55
6. Wiring 56
A. General Considerations and Recommendations 56
B. Remote Switch Harness Fabrication 56
C. ELT 22-Pin Plug Installation 60
D. Cockpit Remote Switch 9-Pin Plug Installation 61
E. Wiring Installation 62
F. Antenna Connection 62
G. Cockpit Remote Switch Power Connection 62
H. ELT Power Connection 62
I. Airframe Ground Connections 62
J. Buzzer Connection 63
K. Remote Switch Final Installation 63
7. ELT Installation and Test 64
A. Installation 64
B. Post-Installation Testing 65
C. Installation Documentation 65
8. Battery Pack Installation 66
A. Battery Reinstallation 66
B. New Battery Installation 67
9. Helicopter Installations - Special Considerations 68
A. Background 68
B. Recommendations 68
C. Orientation 69

APPENDIX A – ELT REGISTRATION 70
1. Background Information 70
A. Hex ID Code 70
B. Reason for Registration 70
C. Registration Information Resources 70
2. Registration 71
A. Responsibility 71
B. Required Information 71
C. Where to Register 71

APPENDIX B – PROGRAMMING ADAPTER OPTION 72
1. Description and Operation 72
A. Purpose 72
B. Physical Description 72
C. PA Programming 72
D. Operation 73
2. Installation and Test 73
A. Wiring 73
B. Assembly 74
C. Installation 75
D. Aircraft ID Verification Test 75

APPENDIX C – REMOTE SWITCH CONTROL PANEL OPTION 76
1. Description and Operation 76
   A. Purpose 76
   B. Control Panel Description 76
   C. Modified Buzzer Description 77
   D. Operation 77
2. Remote Switch Control Panel Installation 77
   A. Location 77
   B. Installation 77
3. Modified Buzzer Installation 78
   A. Location 78
   B. Installation 78
4. Wiring and Test 79
   A. Remote Switch Control Panel Wiring Fabrication 79
   B. Modified Buzzer Wiring Fabrication 81
   C. Remote Switch Control Panel Wiring Installation 81
   D. Modified Buzzer Wiring Installation 82
   E. Standard Buzzer Installation 82
   F. Remote Switch Control Panel Final Installation 82
   G. Remote Switch Control Panel Functional Test 84

ILLUSTRATED PARTS LIST 85
1. Introduction 85
   A. Purpose 85
   B. IPL Usage Guide 85
2. Manufacturer Name and Address 85
   A. Ordering Information 85
3. Explanation of Detailed Parts List Entries 85
   A. Fig # & Item Column 85
   B. Part # Column 85
   C. Nomenclature Column 85
   D. UPA (Units Per Assembly) Column 87
4. Detailed Parts List 88

LIST OF ACRONYMS, ABBREVIATIONS AND DEFINITIONS

Term	Definition
AC	Advisory Circular – A Federal Aviation Administration (USA) bulletin with special information. For the purposes of this document, the acronym AC does not refer to electrical alternating current.
AWG	American Wire Gauge – An electrical wire diameter standard. Look for this acronym in front of or following a wire size number.
BNC Connector	A very common type of coax cable connector having a 50 Ω impedance and used for RF signal connections.
CAR	Canadian Aviation Regulations – The rules and regulations governing the manufacture, certification, operation, maintenance, and alteration of aircraft in Canada.
CFR	Code of Federal Regulations – The general and permanent rules published in the Federal Register by the executive departments and agencies of the Federal Government. Title 14, "Aeronautics and Space" contains the FARs.
Container	The term "Container", within the context of this document, refers to a device designed to suppress RF signals, such that the broadcast of an ELT placed in the container cannot reach the SAR satellite system.
COSPAS-SARSAT	The international search and rescue consortium that governs the international satellite-based search and rescue distress alert detection and information distribution system. For a complete description go to the official web site for the International COSPAS-SARSAT Program.
DER	Designated Engineering Representative – An individual qualified and designated by the FAA to approve, or recommend approval, of technical data to the FAA.
Drip Loop	Extra wire length used to form a U-shaped bend in a wire or cable. Water or other fluids will flow down to the bottom of the loop and drip off. Electrical connections are made at the top of the loop.
ELT	Emergency Locator Transmitter – ELTs are installed on aircraft and used to send emergency signals to the SAR satellite system. The word "Beacon" is associated with these devices.
EMI	Electromagnetic Interference – An undesirable disturbance that affects an electrical circuit due to either electromagnetic conduction or electromagnetic radiation emitted from an external source. Also called radio frequency interference or RFI.
Eurocae	European Organization for Civil Aviation Equipment – EUROCAE documents are widely referenced as a means of compliance to European Technical Standard Orders (ETSOs) and other regulatory documents.
FAA	Federal Aviation Administration – The United States government agency for aircraft safety and regulation.
FAR	Federal Aviation Regulations – The rules and regulations governing the manufacture, certification, operation, maintenance, repair, and alteration of aircraft in the United States.
Form 337	FAA Form 337 is required anytime a major repair and/or major alteration is performed on an aircraft. Refer to FAR, Part 43, Appendix A and the definitions of Major Repair/Alteration contained in FAR, Part 1 for guidance.

FSDO	Flight Standards District Office – FAA district offices responsible for aircraft certification, operation, maintenance, and modification issues, approvals and enforcement.
G-Switch	A velocity switch that detects sudden de-acceleration and is used to automatically activate an ELT. May also be referred to as a "crash sensor".
LED	Light Emitting Diode – Semiconductor device that emits light when current is passed through it. Usually used as a status or warning indicator.
MIL	The three-letter acronym that stands for "Military" and proceeds military specifications and standards numbers (e.g., MIL-W-2828 would indicate a wire specification and MIL-STD-2828 would indicate a standard).
PA	Programming Adapter – An optional device that automatically updates the programming of an ELT when it is moved from one aircraft to another.
P/N	Part Number – Refers to an ACR Electronics part number, unless otherwise noted. Part numbers are also indicated with parentheses (e.g., 28x-2828)
Plug	The term "Plug", within the context of this document, refers to the male half of an electrical connector.
RF	Radio Frequency – The range of electromagnetic radiation that constitutes the radio spectrum and corresponds to the frequency of alternating current electrical signals used to produce and detect radio waves.
RTCA	Radio Technical Commission for Aeronautics – Organization that makes recommendations for airworthiness. Refer to http://www.rtca.org/aboutrtca.asp for more information.
RTV	A rubbery silicon-based adhesive typically used to prevent vibration problems and water intrusion.
SAR	Search and Rescue
Screen Room	The term "Screen Room", within the context of this document, refers to a room designed to suppress RF signals, such that the broadcast of an ELT placed in the screen room cannot reach the SAR satellite system.
Service Loop	A length of wire or cable, at the connection point, of sufficient length to allow a component to be withdrawn from its mounting position and disconnected from its associated wiring.
Tether	A tether is a cord or similar device that anchors something movable to a stationary point or anchors two items together, such that they cannot become separated beyond the length of the tether.
TSO	Technical Standard Order – A TSO is a minimum performance standard issued by the FAA for specified materials, parts, processes, and appliances used on civil aircraft.
UTC	Coordinated Universal Time – A time standard based on International Atomic Time. UTC is the time system used in aviation and is often associated with Greenwich Mean Time (GMT) and/or "Zulu" time.
VHF	Very High Frequency – The 30 MHz to 300 MHz radio frequency band.
VSWR	Voltage Standing Wave Ratio – Electrical signals will "echo" back on a wire if load impedance is not matched to the impedance of the wire. VSWR is a measurement of the amount of voltage being "echoed," compared to the original signal.

LIST OF FIGURES

Figure 1 ELT Orthogonal Axes 16
Figure 2 C406-N Series ELT and Mounting Frame Assembly 21
Figure 3 Cockpit Remote Switch 22
Figure 4 Buzzer 22
Figure 5 Battery Pack Assembly 23
Figure 6 Rod and Whip Antennas 23
Figure 7 Blade Antennas 23
Figure 8 ELT Operational Flow Diagram 24
Figure 9 ELT Orthogonal Axes 33
Figure 10 Performance Tests Equipment Setup 34
Figure 11 Current Draw Test Setup 36
Figure 12 Long 406 MHz Message Example 37
Figure 13 ELT Removal Sequence 43
Figure 14 Battery Pack Removal 44
Figure 15 C406-N Series ELT Outline and Dimensions 48
Figure 16 Typical Mounting Tray Installation 50
Figure 17 Rod Antenna 110-338 and Whip Antenna 110-343 Outlines and Dimensions 52
Figure 18 Blade Antennas 110-340 and 110-341 Outlines and Dimensions 53
Figure 19 Remote Switch Outline and Dimensions 54
Figure 20 Buzzer Outline and Dimensions 55
Figure 21 Remote Switch Harness Arrangement 57
Figure 22 Remote Switch Harness Wiring Diagram 58
Figure 23 Harness ELT 22-Pin Plug Arrangement 60
Figure 24 ELT Installation Sequence 64
Figure 25 Battery Pack Installation 66
Figure 26 Battery Pack Screw Tightening Pattern 67
Figure 27 ELT Orthogonal Axes 68
Figure 28 Orientation of ELT for Helicopter Installations 69
Figure 29 Programming Adapter 72
Figure 30 Programming Adapter Interface Wiring Diagram 74
Figure 31 Programming Adapter Installation 75
Figure 32 Remote Switch Control Panel Assembly 76
Figure 33 Cockpit Remote Switch Panel Outline and Dimensions 77
Figure 34 Modified Buzzer Outline and Dimensions 78
Figure 35 Remote Switch Control Panel Wiring Diagram (130-4005 Modified Buzzer) 80
Figure 36 Remote Switch Control Panel Wiring Diagram (130-4004 Buzzer) 83

Figure 37 C406-N Series ELT Main Assembly and Installation 88
Figure 38 Electrical Components 90
Figure 39 Antennas 92

RECORD OF REVISIONS

REVISION	CHANGE	DATE	REVISION	CHANGE	DATE
-	RELEASE	May 12/2003	U	ECO 17212	Feb 7/2020
A	DCN 2227	Jul 11/2003	V	ECO 17261	Apr 7/2020
A	DCN 2273	Sep 08/2003	W	ECO 17300	May 28/2020
B	DCN 2380	Mar 22/2004	Y	ECO 18023	Jul 13/2023
C	DCN 2444	Aug 05/2004	AA	ECO 18167	Apr 2/2024
C	DCN 2730	Mar 09/2006	AB	ECO 18392	Jun 23/2025
C	DCN 2870	Oct 05/2006	AC	ECN 19058	May 20/2026
D	DCN 2961	Mar 13/2007			
D	DCN 2968	Mar 20/2007			
E	DCA W9414	Apr 06/2010			
F	ECO 14756	Jul 28/2011			
G	ECO 15149	Jul 31/2012			
H	ECO 15329	Mar 1/2013			
J	ECO 15726	Aug 13/2014			
K	ECO 15830	Dec 01/2014			
L	ECO 16813	Jan 22/2018			
M	ECO 16838	Jan 25/2018			
N	ECO 16862	Mar 1/2018			
P	ECO 16887	Mar 30/18			
R	ECO 17024	Feb 28/19			

SERVICE BULLETIN LIST

SERVICE BULLETIN NO	ISSUE DATE	SUBJECT	MANUAL REV NO	MANUAL REV DATE

LIST OF EFFECTIVE PAGES

SUBJECT	PAGE	DATE	SUBJECT	PAGE	DATE
Title Page	1	May 20/26	Test and Fault Isolation (cont.)	39	May 28/20
Notices	2	May 28/20		40	May 28/20
Table of Contents	3	May 20/26		41	May 28/20
	4	May 28/20		42	May 28/20
	5	May 20/26	Removal	43	May 28/20
	6	May 28/20		44	May 28/20
List of Acronyms, Abbreviations, and Definitions	7	May 28/20		45	May 28/20
	8	May 28/20	Installation	46	May 28/20
List of Figures	9	May 28/20		47	May 28/20
	10	May 28/20		48	May 28/20
Record of Revisions	11	Jun 23/25		49	May 28/20
Service Bulletin List	12	May 28/20		50	May 28/20
List of Effective Pages	13	Jun 23/25		51	May 28/20
	14	May 28/20		52	May 28/20
Introduction	15	May 28/20		53	May 28/20
	16	May 28/20		54	May 28/20
	17	Jul 13/23		55	May 28/20
	18	May 28/20		56	May 28/20
	19	May 28/20		57	May 28/20
Description and Operation	20	May 28/20		58	May 28/20
	21	May 28/20		59	May 28/20
	22	May 28/20		60	May 28/20
	23	May 28/20		61	May 28/20
	24	May 28/20		62	May 28/20
	25	May 28/20		63	May 28/20
	26	May 28/20		64	May 28/20
	27	May 28/20		65	May 28/20
	28	May 28/20		66	May 20/26
Test and Fault Isolation	29	Jun 23/25		67	May 20/26
	30	May 28/20		68	May 20/26
	31	May 28/20		69	May 28/20
	32	May 28/20	Appendix A	70	May 28/20
	33	May 28/20		71	May 28/20
	34	May 28/20	Appendix B	72	May 28/20
	35	May 28/20		73	May 28/20
	36	May 28/20		74	May 28/20
	37	May 28/20		75	May 28/20
	38	May 28/20	Appendix C	76	May 28/20

SUBJECT	PAGE	DATE	SUBJECT	PAGE	DATE
Appendix C (cont)	77	May 28/20	Illustrated Parts List (cont)	85	May 28/20
	78	May 28/20		86	May 28/20
	79	May 28/20		87	May 28/20
	80	Apr 10/24		88	May 28/20
	81	May 28/20		89	May 28/20
	82	May 28/20		90	May 28/20
	83	May 28/20		91	May 28/20
Illustrated Parts List	84	May 28/20		92	May 28/20

INTRODUCTION

1. Manual Usage

A. General

1) This manual describes the operation, installation, and maintenance of the Model C406-N Series emergency locator transmitter (ELT). The information is provided to ensure initial and continued airworthiness. Information presented in this manual is accurate at the time of printing, but is subject to change. Refer to the Artex products web site at www.acrartex.com for the latest information and any updates to this manual.
2) Information on COSPAS-SARSAT emergency locator beacon registration requirements and procedures is provided in Appendix A – ELT Registration on page 70.
3) Web links provided in this manual were accurate at time of printing but may be subject to change.
4) ACR Electronics, Inc. reserves the right to add approved components to the ELT system; including, but not limited to antennas, remote switches, and coaxial cables.
5) Regulatory references contained herein are generally confined to United States and Canadian requirements and, in any case, should not be considered all encompassing. Consult your national aviation authority for applicable requirements.

B. Application

1) This manual constitutes supporting data/documentation for the C406-N Series ELT, including:
   a) Description and Operation
   b) Test and Fault Isolation (includes inspection criteria)
   c) Removal
   d) Installation
   e) Registration
   f) Illustrated Parts List
2) In the United States, the C406-N Series ELT must be installed and maintained in accordance with the requirements herein and 14 CFR, FAR Parts 43, and 91; and other airworthiness requirements, as applicable.
3) In Canada, the C406-N Series ELT must be installed and maintained in accordance with the requirements herein and Canadian Aviation Regulations (CAR), Part V, Paragraph 551.104 and other CAR airworthiness requirements, as applicable.
4) C406-N Series ELT installation and maintenance in all other countries must comply with the requirements herein and applicable national airworthiness requirements.
5) The accessories (i.e., remote switch and antennas) addressed in this manual are the accessories most commonly associated with the C406-N Series ELT. Other options, such as a different remote switch configuration, should be installed and maintained in accordance with the written instructions specific to the accessory.

   NOTE: Contact ACR Electronics, Inc. for optional accessories approved for use with a C406-N Series ELT.

6) To ensure proper operation, only parts listed in the Illustrated Parts List of this manual or those recommended by ACR Electronics may be used as replacement parts for the C406-N Series ELT.

2. Model Descriptions

A. C406-N

1) The C406-N is a type AF (Automatic Fixed) ELT, which transmits on 121.5, 243.0, and 406 MHz.
2) The ELT is enclosed within a multi-piece mounting frame consisting of a mounting tray, protective top cover and mounting frame cap.
3) When ordered as a system, an installation kit, cockpit remote switch, coax cable, audible buzzer, and single input antenna are provided.

B. C406-N HM

1) The C406-N HM ELT was developed for helicopter installations and features an additional 5-axis G-Switch module, which allows the ELT to be activated in any of the six orthogonal axes. See Figure 1 ELT Orthogonal Axes.
2) The C406-N HM ELT is identical to the C406-N ELT in all other aspects.

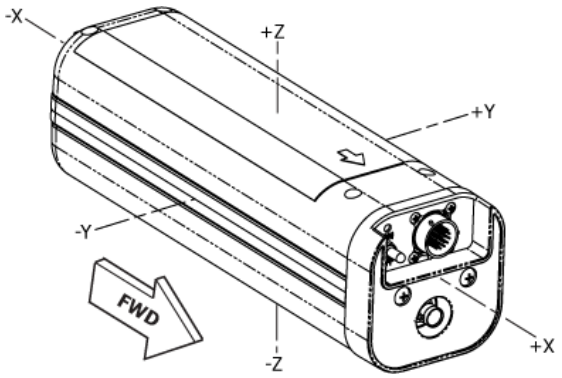

Figure 1 ELT Orthogonal Axes

3. Approvals

A. C406-N and C406-N HM

1) FAA TSO C126, Type AF
   a) The conditions and tests required for TSO approval of this article are minimum performance standards. It is the responsibility of those installing this article either on or within a specific type or class of aircraft to determine that the aircraft installation conditions are within TSO standards. TSO articles must have separate approval for installation in an aircraft. The article may be installed only if performed under 14 CFR Part 43 or the applicable airworthiness requirements.
2) Transport Canada - Type Certificate Data Sheet AP-56
3) Industry Canada - Certification Number 1215B-C406N AF
4) ETSO-2C126
5) COSPAS-SARSAT - Certificate No. 135

B. Battery

<u>CAUTION</u>: LITHIUM BATTERY SAFETY CONCERNS INCLUDE THE POSSIBILITY OF FIRE, VENTING VIOLENTLY, AND VENTING OF TOXIC GASES.

1) The lithium battery pack used on the C406-N Series ELT is certified under TSO C142.
   a) The conditions and tests required for TSO approval of this battery are minimum performance standards. It is the responsibility of those desiring to install this battery in a specific type or class of aircraft to determine that the aircraft installation conditions are within the TSO standards. The

battery may be installed only if further evaluation by applicant documents an acceptable installation and is approved by the Administrator.

C. RTCA DO-160D Compliance

1) DO-160D Environmental Categories: [D1]XBC[B204][204]XRXXXXXZAZZ[204]H[XXXX]XXX
2) The DO-160D environmental categories breakdown is detailed in Table 1.

CATEGORY	SECTION	DESCRIPTION
D1	4.0	Temperature/Altitude
X	4.5.4	In-Flight Loss of Cooling
B	5.0	Temperature Variation
C	6.0	Humidity
B204	7.0	Operational Shock and Crash Safety
204	8.0	Vibration
X	9.0	Explosion
R	10.0	Waterproofness
X	11.0	Fluids Susceptibility
X	12.0	Sand and Dust
X	13.0	Fungus
X	14.0	Salt Spray
X	15.0	Magnetic Effect
Z	16.0	Power Input
A	17.0	Voltage Spike
Z	18.0	Audio Frequency Susceptibility
Z	19.0	Induced Signal Susceptibility
204	20.0	Radio Frequency Susceptibility
H	21.0	Emission of RF Energy
XXXX	22.0	Lightning
X	23.0	Lightning Direct Effects
X	24.0	Icing
X	25.0	Electrostatic Discharge

Table 1 Environmental Categories Breakdown

4. Frequency Allocations

A. Application

1) This section addresses the 406.0-406.1 MHz transmitter window and the specific frequency band allocations residing above 406.028 MHz, which are assigned or reserved within the 406.0-406.1 MHz distress frequency window.

B. Discussion

1) The 406 MHz transmitter frequency of the C406-N Series ELT was originally 406.028 MHz. In order to comply with COSPAS-SARSAT frequency allocation requirements, changes to the 406 MHz frequency may occur since the original release of this product.
2) While the original C406-N Series ELTs covered by this manual transmit on 406.028 MHz, current C406-N Series ELTs may not. The product identification label on each ELT specifies the transmitting frequencies of the individual ELT. The 406 MHz component may be 406.028, 406.037 MHz, etc. Allocation of frequencies, based on beacon population per specified frequency band, is controlled by COSPAS-SARSAT.
3) The frequency references throughout this manual for the 406 MHz component should be considered the baseline and the specific frequency indicated on the ELT product label should be substituted if it differs from 406.028 MHz.

5. References

A. Regulatory Documents

1) The following regulatory documents are referred to herein. When referring to such documents, it is the manual user's responsibility to ensure they are using the latest revision or release of such documents. To that end, the revision designator of specific document numbers has not been included, with the exception of the RTCA document listing, which reflects the revision level of the documents at the time of TSO testing and certification.
2) Except in the case of a printed manual, reference documents available online or source locations are linked to applicable web sites.
3) United States
   a) AC 20-130, "Airworthiness Approval of Navigation or Flight Management Systems Integrating Multiple Navigation Sensors"
   b) AC 20-138, "Airworthiness Approval of Global Navigation Satellite System (GNSS) Equipment"
   c) AC 43-9, "Maintenance Records"
   d) AC 43-210, "Standardized Procedures for Requesting Field Approval of Data, Major Alterations, and Repairs"
   e) AC 43.9-1, "Instructions for Completion of FAA Form 337"
   f) AC 43-13-1, "Acceptable Methods, Techniques, and Practices – Aircraft Inspection and Repair"
   g) AC 43.13-2, "Acceptable Methods, Techniques, and Practices - Aircraft Alterations"
   h) FAR, Part 43, "Maintenance, Preventive Maintenance, Rebuilding, and Alteration"
   i) FAR, Part 91, "General Operating and Flight Rules"
4) Canada
   a) CAR, Part V, "Airworthiness"
   b) CAR, Part VI, "General Operating and Flight Rules"
5) COSPAS-SARSAT
   a) C/S G.005, "Cospas-Sarsat Guidelines on 406 MHz Beacon Coding, Registration and Type Approval"

b) C/S S.007, "Handbook of Beacon Regulations"

6) RTCA – The following documents are available for purchase at RTCA's web site www.rtca.org or by mail:

a) DO-160D, "Environmental Conditions and Test Procedures for Airborne Equipment"

b) DO-178B, "Software Considerations in Airborne Systems and Equipment Certification"

c) DO-182, "Emergency Locator Transmitter (ELT) Equipment Installation and Performance"

d) DO-183, "Minimal Operational Performance Standards for Emergency Locator Transmitters - Automatic Fixed-ELT (AF), Automatic Portable-ELT (AP), Automatic Deployable-ELT (AD), Survival-ELT (S) Operating on 121.5 and 243.0 MHz"

e) DO-204, "Minimal Operational Performance Standards for 406 MHz Emergency Locator Transmitters (ELT)"

B. Other Documents

1) The following documents are available online at the Artex products web site at www.acrartex.com or from ACR Electronics upon request.

a) Document number 570-1000, "ELT Test Set Operations Manual"

b) Document number 570-2000, "453-2000 Handheld Programmer Operations Manual"

c) Document number Y1-03-0272, "A3-06-2824 Handheld Programmer Operations Manual"

d) Document number Y1-03-0273, "A3-06-2825 ELT Test Set Operations Manual"

DESCRIPTION AND OPERATION

1. Description

A. Functional Overview

1) The ELT automatically activates during a crash and transmits the standard sweep tone on 121.5 and 243.0 MHz. Approximately every 50 seconds, for up to 520 milliseconds (long message protocol); the 406 MHz transmitter turns on. During that time, an encoded digital message is sent to the COSPAS-SARSAT Search and Rescue (SAR) satellite system.
2) The information contained in the message includes:
   a) Serial number assigned to the ELT by the beacon manufacturer or the national beacon registration authority.
   b) Aircraft identification (24-bit address) or registration number

   NOTE: When the optional C406-N Programming Adapter (PA) is installed, ELTs can be moved between aircraft and the PA reprograms the ELT with either the aircraft 24-bit address or registration number. See Appendix B – Programming Adapter Option.

   c) Country of registration and country code
   d) Position coordinates provided by the aircraft navigation system

   NOTE: The C406-N Series ELT supports ARINC 429 data bus formats for receiving position data from the aircraft navigation system. Other formats, such as RS-232, RS-422, etc., are not supported.

3) The 406 MHz transmitter will operate for 24 hours and then shuts down automatically. The 121.5/243.0 transmitter will continue to operate until the batteries are exhausted, which is typically at least 50 hours.
4) The 406 MHz transmitter produces a much more accurate position, typically 3 kilometers as compared with 15 to 20 kilometers for 121.5/243.0 MHz transmitters. When coupled to the aircraft navigation system, the accuracy improves to approximately 100 meters.
5) The ELT transmits a digital message that allows search and rescue authorities to contact the owner/operator of the aircraft through information contained in a database. Information contained in the database includes:

   a) Type of aircraft and aircraft registration number
   b) Owner address and telephone number
   c) Alternate emergency contact

6) After the ELT is activated and the 406 MHz signal is detected by the SAR satellite system and a position is calculated, the 121.5/243.0 MHz transmissions are used to home in on the crash site.

   NOTE: Effective February 1, 2009, COSPAS-SARSAT has terminated the satellite processing of distress signals from 121.5 and 243.0 MHz beacons.

7) Aircraft communications transceivers are not capable of receiving 406 MHz transmissions; therefore, the only methods of monitoring the ELT are:

a) The blinking cockpit remote switch LED
b) The buzzer,
c) 121.5/243.0 MHz transmissions, which can be monitored using the aircraft communications transceiver or an AM radio tuned to 121.5 MHz.

B. Components

1) The C406-N Series ELT main assembly is housed in a high impact, fire resistant, polycarbonate plastic case, which is enclosed in a protective mounting frame assembly made of similar material. See Figure 2 C406-N Series ELT and Mounting Frame Assembly.

NOTE: The ELT main assembly and its mounting frame assembly are capable of withstanding extremely harsh environments and have been subjected to the rigorous environmental testing required by COSPAS-SARSAT for certification.

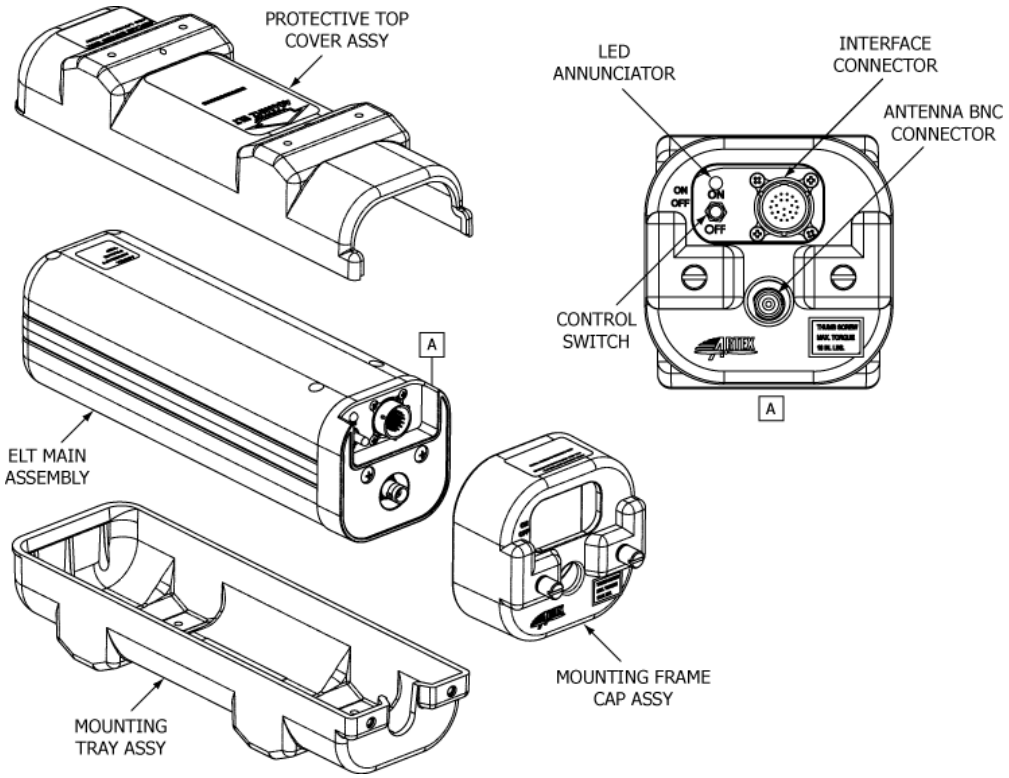

Figure 2 C406-N Series ELT and Mounting Frame Assembly

2) The cockpit-mounted remote switch assembly is comprised of an ELT status LED and control switch, which allows an operator to monitor ELT status and manually turn on the ELT (i.e., activating) for testing and resetting (i.e., deactivating) the ELT. See Figure 3 Cockpit Remote Switch.

   NOTE: The ELT CANNOT be disarmed or disabled from the cockpit. Cockpit operation is limited to deactivating or manually activating the ELT.

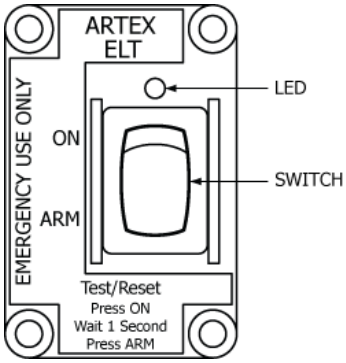

Figure 3 Cockpit Remote Switch

3) The buzzer (i.e., horn) provides an audible alert when the ELT is active. See Figure 4 Buzzer.

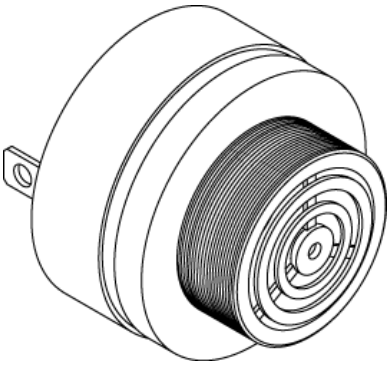

Figure 4 Buzzer

4) The battery pack for the C406-N Series ELT consists of four "D" size lithium manganese dioxide cells connected in series. In an effort to increase the safety of the battery pack, a number of features were designed into the battery pack. To prevent the cells from being charged, diodes are connected across each cell and fuses are connected to the output. See Figure 5 Battery Pack Assembly.

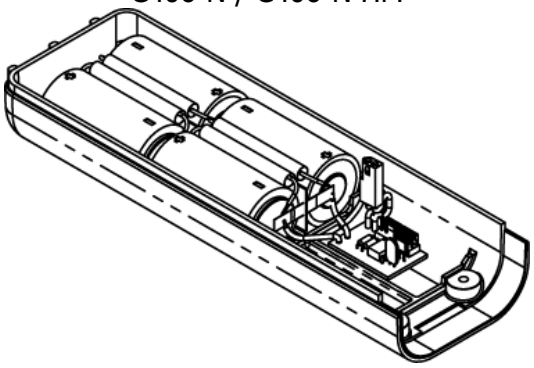

Figure 5 Battery Pack Assembly

5) Four single-input antennas are approved for use with the C406-N Series ELT. Selection of the proper antenna is dependent upon end use, aircraft configuration and speed, and other factors. See Figure 6 Rod and Whip Antennas and Figure 7 Blade Antennas.

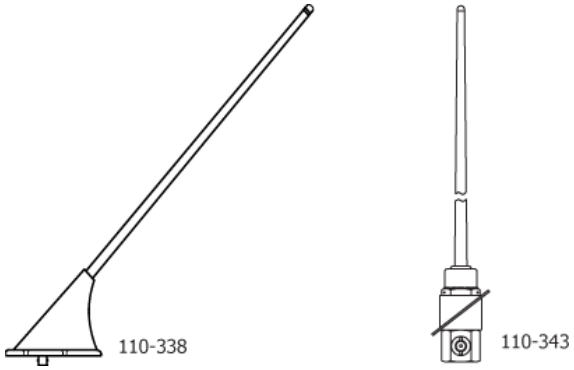

Figure 6 Rod and Whip Antennas

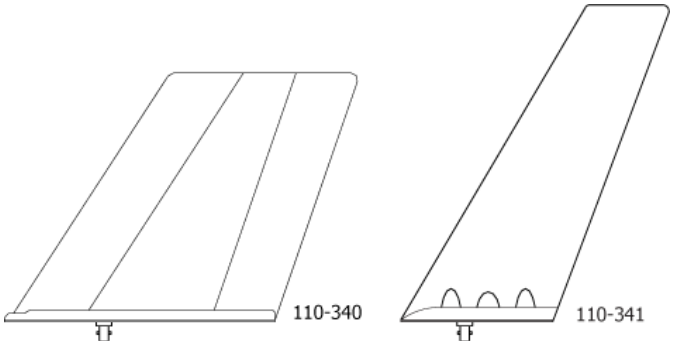

Figure 7 Blade Antennas

2. Operation

A. Operational Overview

1) See Figure 8 ELT Operational Flow Diagram.
2) A primary feature of the C406-N Series ELT is its simplicity of operation. As long as the ELT is connected to the remote switch harness ELT connector, such that pins 12 and 13 are jumpered (G-switch loop), it will activate in the event of a crash.

NOTE: Neither the cockpit remote switch nor the ELT local switch can be positioned in such a manner as to prevent automatic activation when the ELT is connected properly.

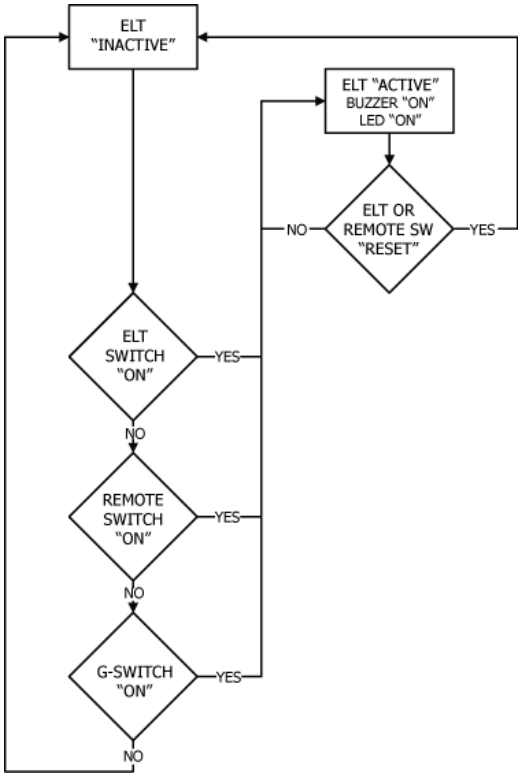

Figure 8 ELT Operational Flow Diagram

3) ELT operation is designed to prevent human error and misuse in regards to automatic activation. The ELT cannot be activated by dropping, rough handling or during shipping.
4) When the ELT is activated, the presence of the emergency sweep tone and the flashing cockpit remote switch panel LED indicates an active, normal functioning ELT. The remote switch LED must immediately begin to flash continuously upon ELT activation.
5) The ELT is considered to be either "ACTIVE" or "INACTIVE". When "INACTIVE", the ELT is in a state of rest and performs no functions. Taking the ELT from the "INACTIVE" state to the "ACTIVE" state requires a positive switch transition from either the cockpit remote switch, ELT local switch, or G-switch.
   a) It is possible the primary G-switch or one of the auxiliary G-switches could activate the ELT in either a fixed or rotor wing aircraft as the result of severe maneuvers or a very hard landing.

b) To take the ELT from an "ACTIVE" state back to an "INACTIVE" state, a "RESET" must occur.

6) A warning buzzer is required under C126 TSO approval. The buzzer is powered by the ELT and therefore not dependent upon the aircraft battery for operation. It is not designed to operate continuously, but sounds at predetermined intervals and runs for shorter periods toward the end of ELT battery life.

7) The ELT is connected to the aircraft navigation system, receives position data, and encodes the data into the 406 MHz message. The ELT has an on-board power supply backup that enables the ELT to retain position data for up to 36 seconds if aircraft power is lost.

B. Normal Operation

1) The cockpit remote switch is in the "ARM" position (i.e., down).
2) The local switch on the ELT is in the "OFF" position (i.e., down).
3) Aircraft navigation system active.

NOTE: The aircraft navigation system must be active and sending position data to the ELT for the ELT to incorporate position data into the 406 MHz message.

C. Manual Activation

1) The ELT may be manually activated by placing either the remote switch or the ELT local switch in the "ON" position.

NOTE: As long as the cockpit remote switch and the ELT local switch are in the ARM/OFF positions respectively, the ELT will automatically activate on impact.

D. ELT Reset

1) If the ELT is accidently activated, it will need to be reset.
2) Reset the ELT from the cockpit by moving the remote switch to the "ON" position, waiting approximately one second, and then moving it back to the "ARM" position. If the switch is already in the "ON" position, move it to the "ARM" position.
3) Reset the ELT locally by moving the switch on the ELT to the "ON" position, waiting approximately one second, and then moving it back to the "OFF" position. If the switch is already in the "ON" position, move it to the "OFF" position.

NOTE: The ELT cannot be reset if either the cockpit remote switch or the ELT local switch is in the "ON" position.

E. Functional Check

1) A monthly functional check is recommended to verify operational status of the ELT.
2) Perform this functional check per instructions on page 38.

3. Specifications

A. Environmental and Physical

1) Table 2 lists the environmental and physical specifications of the C406-N Series ELT.

NOTE: For automatic activation, the higher threshold of 4.5 ft/sec (2.3 *g*) is specified in accordance with Eurocae ED-62. Use of the higher threshold crash sensor has been approved by the FAA as a deviation to TSO C126 (FAA Reference #98-130S-108, February 6, 1998).

CRITERIA	PARAMETER	CHARACTERISTIC
Temperature	Storage	-55° C to +85° C
	Operating	-20° C to +55° C
Mechanical	Vibration	10 *g*, 5 Hz to 2,000 Hz
	Shock	500 *g* for 4 ms
	Crashworthiness	100 *g* for 23 ms
	Humidity	95% for 50 hours
	Penetration	55 lbs from 6 in. (25 kg from 15 cm)
	Crush	1,000 lbs (454 kg)
	Altitude	55,000 ft (16,764 m)
Automatic Activation	C406-N Series (Primary G-Switch)	4.5 ±0.5 ft/sec (2.3 *g*)
	C406-N HM (Auxiliary Five G-Switches)	12 *g*
Weight	ELT Complete w/Battery Pack, Mounting Tray, and Covers	4.25 lbs (1.9 kg)
Dimensions (LxHxW)	ELT Complete w/Battery Pack, Mounting Tray, and Covers	11.63 x 3.90 x 3.76 in. (295 x 99 x 96 mm)
Software	In accordance with RTCA/DO-178B, Level D	

Table 2 Environmental and Physical Specifications

B. Electrical

1) Table 3 lists the electrical specifications of the C406-N Series ELT.

CRITERIA	PARAMETER	CHARACTERISTIC
Operating Frequencies	406.028 MHz, or higher	± 1 KHz (Initial) +2/-5 KHz (5 years) 2 parts/10E9 in 100 ms
	121.5 and 243.0 MHz	± 0.005%
Modulation	406 MHz	Bi-Phase L (16K0G1D)
	121.5 and 243.0 MHz	Amplitude Modulation (3K20A3X)
Transmitter Duty Cycle	406 MHz	440 ms (± 1%), or 520 ms (± 1%), every 50 seconds (± 5%)
	121.5 and 243.0 MHz	Continuous
Peak Effective Radiated Power (PERP)	406 MHz	5 W (37 ± 2 dB) PERP, or EIRP for 24 hrs @ -20° to +55° C
	121.5 and 243.0 MHz	Min. 50 mW (17 dBm) PERP for 50 hrs @ -20° to +55° C or 100 mW EIRP (20 dBm) for 48 hrs @ -20° to +55° C
Occupied Bandwidth	406 MHz	20 KHz max.
	121.5 and 243.0 MHz	25 KHz max.
Spurious Emissions	406 MHz	Per RTCA/DO-204
	121.5 and 243.0 MHz	Per CFR Title 47 (FCC), Part 87
Input Power	NAV Function	+28 VDC ± 5 VDC, 120 mA Max. (60 mA nominal)
Position Data Input	Protocol	ARINC 429, High Speed, Low Speed GAMA High, GAMA Low Labels 310 (Lat.), 311 (Long.)
Output	Master Caution (Pin 7)	Vmax = 30 VDC, Imax = 25 mA, Imax for Logic Level Low <1 mA Active low switch to ground, pulled up externally
Battery	Type of Cell	Lithium Manganese Dioxide
	Voltage	12.0
	Amp-Hour Rating	10.0

Table 3 Electrical Specifications

C. Antennas

1) Table 4 lists the specifications of the antennas approved for use with the C406-N Series ELT.

PARAMETERS	CHARACTERISTIC			
	110-338	**110-340**	**110-341**	**110-343**
Style	Rod	Blade	Blade	Whip
Frequencies	121.5, 243.0, 406 MHz			
VSWR	121.5 and 243.0 MHz - 2.0:1 Max. 406 MHz - 1.5:1 Max.		121.5/243.0 MHz - 1.75:1 or better 406 MHz - 1.5:1 or better	121.5/243.0 MHz - 2.5:1 or less 406 MHz - 1.5:1 or less
Polarization	Vertical Monopole			
Radiation Pattern	121.5 and 243.0 MHz - Omnidirectional 406 MHz - Hemispherical			
Impedance (ohms)	50 Nominal			
Weight	0.45 lbs (0.20 kg)	1.40 lbs (0.64 kg)	0.80 lbs (0.36 kg)	0.31 lbs (0.14 kg)
Drag	2.9 lbs (1.3 kg) @ 350 KTS, 25,000 ft	1.3 lbs (0.6 kg) @ 241 KTS EAS	8 lbs (3.6 kg) @ 350 KTS EAS	Minimal
Coax Cable	RG-142			
Connector	BNC Female			
Dimensions (Base-to-Tip)	15.5 in. (39.4 cm)	7.75 in. (19.7 cm)	10.1 in. (25.7 cm)	17.1 in. 43.4 cm)

Table 4 Antenna Specifications

TEST AND FAULT ISOLATION

1. Inspection and Test Regulatory Requirements

Maintenance and testing shall be conducted in accordance with the requirements of applicable national regulatory authorities and the requirements herein, as applicable. Local regulations and requirements shall take precedence. Any reference to, or reproduction of, regulations is provided as guidance only.

A. United States

1) In accordance with FAR Part 91, Subpart C, § 91.207 (d), the ELT must be inspected within 12 calendar months after the last inspection for:
   a) Proper installation
   b) Battery corrosion
   c) Operation of controls and crash sensor
   d) The presence of a sufficient signal radiated from its antenna.
2) All maintenance shall be performed in accordance with FAR Part 43, Appendix D, which requires the following inspections at each annual or 100-hour inspection:
   a) ELT and mount for improper installation
   b) Wiring and conduits for improper routing, insecure mounting, and obvious defects
   c) Bonding and shielding for improper installation and poor condition
   d) Antenna, including trailing antenna, for poor condition, insecure mounting, and improper operation

B. Canada

1) CAR Part VI, Standard 625, Appendix C, requires the ELT to be inspected at intervals not exceeding 12 months.
2) All maintenance and testing shall be performed in accordance with the requirements of CAR Part V, Standard 571, Appendix G, which requires:
   a) Corrosion inspection (interval not to exceed 24 months)
   b) Operational testing (interval not to exceed 12 months)
   c) Performance testing (interval not to exceed 24 months), including:
      1. Measured peak power after 3 minutes of operation
      2. Measured frequency after 3 minutes of operation
      3. Audio modulation, which shall be recognizable as a typical ELT signal
      4. Measured current draw in the "OFF" (ARM) and in the "ON" position, as specified by the manufacturer.
      5. The automatic activation system.

C. Other Countries

In the absence of any inspection requirements from national regulatory authorities, operators should follow the annual inspection procedures outlined in Inspection and Test Regulatory Requirements, subsection Maintenance and testing shall be conducted in accordance with the requirements of applicable national regulatory authorities and the requirements herein, as applicable. Local regulations and requirements shall take precedence. Any reference to, or reproduction of, regulations is provided as guidance only.

1) United States above.

2. Inspection and Test Procedures

A. Checklist

1) Table 5 provides a list of the ELT inspection and testing requirements, a copy of which may be used as a checklist to verify inspection and test completion. The item numbers in the table correspond to the item identifiers for each task.

NOTE: Items 5a through 5h are mandatory requirements only in Canada, in addition to meeting the other inspection and test requirements listed in Table 5.

ITEM NO.	DESCRIPTION	BY
1	Coax Cable and Wiring Connections Inspection	
2	ELT Mounting Tray and Hardware Inspection	
3	ELT Battery Pack Inspection	
4a	G-Switch Functional Check	
4b	G. G-Switch Functional Check (Helicopter Models Only)	
5a	121.5 MHz Frequency Measurement	
5b	Audio Modulation Check	
5c	121.5/243.0 MHz Power Output Measurement	
5d	406 MHz Frequency Measurement	
5e	406 MHz Power Output Measurement	
5f	Current Draw Test	
5g	Digital Message Verification	
5h	ELT Reset Check	
6	Installed Transmitter Test	
7	Antenna Test	
8	Inspection and Test Documentation	

Table 5 ELT Inspection and Test Checklist

B. Preparation

1) Remove the ELT per instructions on page 42.
2) Remove the battery pack per instructions on page 44.

C. Coax Cable and Wiring Connections Inspection – Item 1

1) Check remote switch harness connector for corrosion bent or broken pins and other damage.
2) Check antenna coax cable BNC connectors for corrosion, bent or broken center conductor, and other damage.

   NOTE: Pay special attention to the center conductor, which is prone to retracting into the connector housing.

3) Check aircraft navigation system interface wiring connections for damage and deterioration.

D. ELT Mounting Tray and Hardware Inspection – Item 2

1) Inspect mounting tray for cleanliness, cracks, and other damage.
2) Check mounting tray hardware for corrosion and security.
3) Replace or send the ELT for repair if any of the following conditions are true:
   a. Cracks on any of the casings.
   b. Missing or damaged O-ring
   c. Damaged connector housing, connector pins or antenna connections of ELT.
4) Replace remote switch if any of the following conditions are true:
   a. Cracks on the casing.
   b. Illegible lettering on the face
   c. Damaged wiring and connections of remote switch.

E. Battery Pack Inspection – Item 3

CAUTION: THE BATTERY PACK CONTAINS ELECTROSTATIC DISCHARGE SENSITIVE (ESD) COMPONENTS AND, AS SUCH, IT MUST BE HANDLED WITH CARE. IF POSSIBLE, WEAR A GROUNDED WRIST STRAP WHEN HANDLING THE BATTERY PACK DURING INSPECTION AND MAINTENANCE ACTIVITIES. TAKE PARTICULAR CARE TO AVOID TOUCHING THE EXPOSED CIRCUIT BOARD AND CONNECTOR PINS ON THE BOARD.

CAUTION: DO NOT USE CONTACT CLEANER ON ELT COMPONENTS. SUCH CHEMICAL AGENTS CAN BE HIGHLY DESTRUCTIVE TO THE MOUNTING HARDWARE AND ELT HOUSING, CAUSING CRACKING, FRACTURING AND OTHER DAMAGE.

1) Check battery cells, components, and connectors for corrosion and other damage.
2) Check wiring for breaks, damaged insulation, and improper or damaged connections.
3) Check housing for cracks and other visual damage.
4) Remove any corrosion residue from the underside of the ELT.
5) Check the battery pack expiration date.
6) Replace the battery pack if any of the following conditions are true:
   a) After use in an emergency
   b) After an inadvertent activation of unknown duration
   c) When the total of all known transmissions exceeds one hour
   d) On or before battery replacement (expiration) date.

F. G-Switch Functional Check – Item 4a

CAUTION: A JUMPER AND 50-OHM LOAD IS REQUIRED TO PERFORM THIS CHECK. DUE TO POTENTIAL OF PHYSICAL OR ELECTRONIC DAMAGE IF THE JUMPER OR 50-OHM LOAD IS IMPROPERLY INSTALLED, THIS STEP SHOULD BE ONLY PERFORMED BY AN EXPERIENCED TECHNICIAN/MECHANIC.

1) Reinstall the battery per instructions on page 66.

NOTE: If tests 5a through 5h are going to be performed, the battery may be temporarily installed with only two screws, located on a diagonal from each other.

2) Perform this functional check within the first 5 minutes after the hour (UTC), as required by AC 43.13-1, Chapter 12, § 12-22, Note 3.
3) Notify any nearby control tower of your intentions.
4) Install the C406-N Test Loop Back Plug (151-5060) on the ELT receptacle or a jumper between Pins 12 and 13 of the ELT receptacle.

NOTE: The ELT cannot be activated using this procedure unless Pins 12 and 13 on the ELT plug are jumpered. See Figure 22 Remote Switch Harness Wiring Diagram on page 58.

5) Verify the ELT switch is in the "OFF" position.
6) Monitor 121.5 MHz on an AM receiver.
7) Activate the ELT by using a rapid forward (i.e., throwing) motion in the direction of the arrow on the ELT label, followed by a rapid reversing action.
8) Verify activation by listening for the aural sweep tone on the receiver.
9) Reset the ELT by toggling the control switch to the "ON" position and then back to the "OFF" position.

G. G-Switch Functional Check (Helicopter Models Only)– Item 4b

1) This procedure outlines the steps required to test the five-axis G-switch installed in ARTEX Helicopter Model (HM) ELTs.
2) Testing of the primary and five axis G-switch can be accomplished by simulating a rapid deceleration in the required direction of the G-switch. Although the "football throw" test as outlined in item 4a is sufficient to test the forward G-switch, a sturdy padded surface, such as a padded chair or foam-covered workbench, is required to simulate the G-force required to trigger the remaining axes. The padding of the surface is required to prevent damage to the ELT.

NOTE: The fixed wing G-switch is triggered by approximately 2.3 Gs of deceleration (axis +X in Figure 9), whereas the five-axis G-switch is triggered by 12.5 Gs of deceleration (axes -X, -Y, +Y, -Z, and +Z in Figure 9), and requires a significant force to activate. The higher G-rating precludes inadvertent activation in helicopter applications but will allow for activation during a mishap.

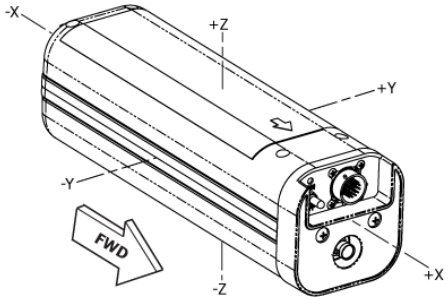

Figure 9 ELT Orthogonal Axes

3) Keep G-switch loop and 50-ohm load installed on the antenna port from Item 4a installed.
4) Utilizing the sturdy padded surface, hold the ELT 10 inches (26.1 Centimeters) above the test area and thrust down forcefully maintaining a level axis into the pad to test the -X axis (see Figure 9).
5) Repeat step 2 for the -Y, +Y, -Z, and +Z axes (see Figure 9).
6) Verify in each case that the ELT activates via G-switch trigger as indicated by the flashing LED. An auxiliary receiver set to 121.5 MHz should be used to detect the ELT signal.
7) Reset the ELT after each activation by toggling the ON/OFF switch to ON and then to OFF to reset the ELT.

H. Performance Testing Setup

NOTE: The ELT software routinely logs battery life in 30-second increments. A minimum of 30 seconds is added to the battery usage total each time the ELT is activated and de-activated. If the ELT is left activated beyond the first 30 seconds, additional time is added in 30-second increments.

NOTE: Careful planning of the performance tests is necessary to avoid activating the ELT more than necessary. Plan the performance testing in a manner that allows tests to be run concurrently and test equipment settings to be quickly switched from one test to another. By doing so, the three-minute warm-up requirement can be eliminated from a number of tests and battery run time minimized to a large extent.

1) Place the ELT in a container or screen room capable of substantially attenuating RF signals, or the transmitter power output shall be connected to a suitable dummy load to minimize radiation.
2) Use the ELT's own battery pack as the power source for these measurements. An alternate power source can be used where lengthy servicing, other than the performance tests, is anticipated.
3) Ensure that adequate attenuation rated for 406 MHz is installed between the ELT antenna output and the measurement equipment to prevent damaging input circuitry, if required. At a minimum, the

attenuator should be rated at 30 dB, and 5 watts for a ½-second duration as shown in Figure 10 Performance Tests Equipment Setup.

Figure 10 **Performance Tests Equipment Setup**

I. 121.5 MHz Frequency Measurement – Item 5a

1) Connect the measuring device, referring to "Performance Testing Setup" on page 32.
2) Activate the ELT by placing the control switch in the "ON" position.
3) Wait three minutes.
4) Perform "Audio Modulation Check" during the three-minute waiting period.
5) Measure the frequency after the three-minute waiting period. The frequency must be within the tolerance specified in Table 3 Electrical Specifications on page 27.

NOTE: If the 121.5 MHz carrier frequency is within specified tolerance, the 243.0 MHz frequency will also be within tolerance.

J. Audio Modulation Check – Item 5b

1) Perform this check in conjunction with "121.5 MHz Frequency Measurement" on page 34.
2) Monitor 121.5 MHz on an AM receiver.
3) Listen for the aural sweep tone on the receiver. The audio should "sound" like an ELT.

K. 121.5/243.0 MHz Power Output Measurement – Item 5c

1) Connect the measuring device, referring to "Performance Testing Setup" on page 32.
2) Activate the ELT, if necessary, by placing the control switch in the "ON" position.
3) Wait three minutes.
4) Read the displayed amplitude. The amplitude must be within the minimum specified for 121.5 MHz in Table 3 Electrical Specifications on page 27 at the terminal output.
5) Change to 243.0 MHz and repeat the procedure for 243.0 MHz.

L. 406 MHz Frequency Measurement – Item 5d

CAUTION: POWER OUTPUT IS APPROXIMATELY 37 DB (5 WATTS). BE SURE ADEQUATE ATTENUATION IS INSERTED IN-LINE BETWEEN THE ELT ANTENNA OUTPUT AND THE MEASURING DEVICE TO PROTECT THE INPUT CIRCUITS OF THE MEASURING DEVICE.

1) Connect the measuring device, referring to "Performance Testing Setup" on page 32.
2) Activate the ELT, if necessary, by placing the control switch in the "ON" position.

3) Wait three minutes.
4) Measure the frequency. The frequency must be within the tolerance specified in Table 3 Electrical Specifications on page 27.

NOTE: The exact 406 MHz frequency used is printed on the ELT product label.

M. 406 MHz Power Output Measurement – Item 5e

CAUTION: POWER OUTPUT IS APPROXIMATELY 37 DB (5 WATTS). BE SURE ADEQUATE ATTENUATION IS INSERTED IN-LINE BETWEEN THE ELT ANTENNA OUTPUT AND THE MEASURING DEVICE TO PROTECT THE INPUT CIRCUITS OF THE MEASURING DEVICE.

1) Connect the measuring device, referring to "Performance Testing Setup".
2) Activate the ELT, if necessary, by placing the control switch in the "ON" position.
3) Wait three minutes.
4) Read the displayed amplitude of the 406 MHz burst that follows the three-minute wait period. The amplitude must be within the minimum specified for 406 MHz in Table 3 Electrical Specifications on page 27 at the output terminal.
5) Deactivate the ELT by placing the control switch in the "OFF" position.

N. Current Draw Test – Item 5f

CAUTION: EXERCISE EXTREME CAUTION TO AVOID CAUSING A SHORT CIRCUIT CONDITION, WHICH WILL BLOW THE FUSES IN THE BATTERY PACK. THIS TEST SHOULD ONLY BE PERFORMED BY AN EXPERIENCED TECHNICIAN/MECHANIC.

CAUTION: ALL "ON" STATE CURRENT MEASUREMENTS MUST BE MADE WITH THE RF OUTPUT (I.E., ELT ANTENNA CONNECTOR) LOADED WITH 50 OHMS RATED FOR 5 WATTS. EITHER A RESISTIVE LOAD OR EQUIPMENT WITH 50 OHM IMPEDANCE PADDED WITH 10 DB/5 WATT ATTENUATOR. SEE PERFORMANCE TESTING SETUP ON PAGE 32.

1) Verify the ELT control switch is in the "OFF" position.
2) Separate the battery pack from the ELT.
3) Disconnect the 2-wire ELT power connector.
4) Install test harness 611-0024, or equivalent, in the power circuit. See Figure 11 Current Draw Test Setup.

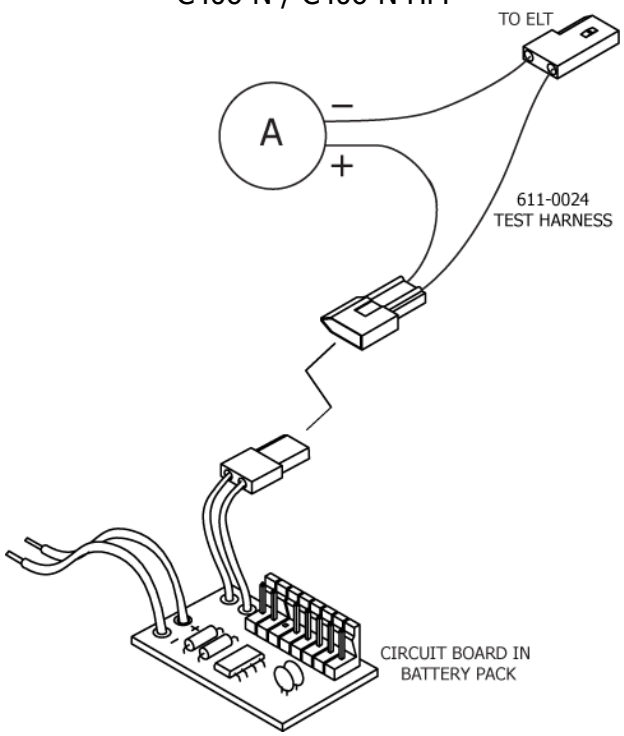

Figure 11 Current Draw Test Setup

5) Read the current draw on the ammeter. Measured current should be 0 µA (micro-amps), and must not be more than 6 µA.
6) Verify the ammeter is set to accommodate a range of at least 3.5 amps.
7) Activate the ELT by placing the control switch in the "ON" position.
8) Allow the ELT to stabilize for at least 30 seconds to avoid false readings.
9) Read the current draw on the ammeter. Steady state current draw must not exceed 200 mA.
10) Deactivate the ELT by placing the control switch in the "OFF" position.
11) Remove the test harness.
12) Reinstall the battery pack in accordance with Battery Installation on page 66.

O. Digital Message Verification – Item 5g

1) Activate the ELT by placing the control switch in the "ON" position.
2) Allow the ELT to transmit for 15 to 30 seconds, but not more than 40 seconds.
3) Set the 453-1000 ELT Test Set (ETS) beacon reader to receive and decode the ELT digital message. Refer to ELT Test Set Operations manual (570-1000) for ETS operating instructions and additional details.

   NOTE: A beacon reader equivalent to the ETS may be used, provided it is capable of receiving and decoding the 406 MHz digital message.

4) Deactivate the ELT and read the test message broadcast at "turn-off". A message example is shown in Figure 12 Long 406 MHz Message Example.
   a) The test message broadcast by the ELT at "turn-off" contains all the information in an actual distress message, except there is a special digital prefix that informs COSPAS-SARSAT satellites to ignore the message.

b) The Figure 12 Long 406 MHz Message Example is an ELT programmed for "Standard Location Protocol ELT with 24-Bit Address". Actual messages will vary depending on the protocol and information programmed into the ELT.

c) When the ELT is disconnected from the aircraft navigation system, or the navigation system is not active, the message will indicate "Position Invalid" in lieu of position data, as shown in Figure 12 Long 406 MHz Message Example.

Figure 12 Long 406 MHz Message Example

5) Repeat the activation and deactivation cycle if the ETS fails to read the message on the initial try. The 406 MHz oscillator may not be warmed up. If continued attempts to read the message fail, check for self-test error codes and refer to Table 6 on page 41.

P. ELT Reset Check – Item 5h

1) Place the ELT control switch in the "ON" position.
2) Return the switch to the "OFF" position.
3) If the ELT is working properly, the LED will stay on for approximately 1 second and then turn off. If a series of flashes are displayed, refer to Table 6 on page 41.

NOTE: A 5-flash error indication will occur if the ELT is programmed with a location protocol, since no navigation input data is present.

Q. Installed Transmitter Test – Item 6

CAUTION: DO NOT ALLOW THE DURATION OF THIS TEST TO EXCEED 5 SECONDS. THE ELT WILL TRANSMIT A 406 MHZ SIGNAL AFTER THE ELT IS ACTIVATED FOR APPROXIMATELY 47 SECONDS. THE COSPAS-SARSAT SATELLITE SYSTEM WILL CONSIDER THE 406 MHZ TRANSMISSION TO BE A VALID DISTRESS SIGNAL.

1) Reinstall the ELT per Installation instructions on page 64.
2) Perform the following functional check within the first 5 minutes after the hour (UTC), as required by AC 43.13-1, Chapter 12, § 12-22, Note 3.
3) Notify any nearby control tower of your intentions.
4) Tune a receiver, usually the aircraft transceiver, to 121.5 MHz.

NOTE: An AM radio may be used to receive the signal.

5) Activate the ELT by placing the cockpit remote switch in the "ON" position. The LED will begin flashing continuously.
6) Listen for 3 audible sweeps on the receiver, which takes about 1 second.
7) Verify the buzzer sounds immediately upon activation.
8) Return the cockpit remote switch to the "ARM" (OFF) position while paying close attention to LED activity when the ELT enters the "ARM" condition. If the ELT is working properly, the LED will stay on for approximately 1 second and then turn off.

NOTE: This test also completes the requirement to check ELT controls by verifying operation of the remote switch.

9) Refer to Table 6 ELT Self-Test Error Codes Troubleshooting Guide on page 41 if the LED displays a series of error code flashes.

R. Antenna Test – Item 7

CAUTION: DO NOT ALLOW THE DURATION OF THIS TEST TO EXCEED 5 SECONDS.

1) Tune a low quality AM receiver (i.e., radio) to 121.5 MHz.

   NOTE: The aircraft transceiver is not recommended for this test, because it is too sensitive to verify the integrity of the antenna system and it may pick up a weak signal even if the antenna is disconnected from the ELT. An AM radio provides a better level of confidence for this test.

2) Place the radio approximately six inches from the antenna.
3) Activate the ELT by placing the cockpit remote switch in the "ON" position.

   NOTE: Perform this test within the first five minutes after the hour UTC.

4) Listen for 3 audible sweeps on the radio, which takes about 1 second. An audible signal verifies energy is being transmitted by the antenna.
5) Reset the ELT by placing the cockpit remote switch in the "ARM" position.

S. Inspection and Test Documentation – Item 8

1) Make an appropriate entry in the aircraft maintenance records (i.e., logbook), including the date the ELT inspection and testing was satisfactorily completed.
2) In addition to the requirements of Step 1, for aircraft operating under Canadian authority and following satisfactory completion of performance testing, the date on which the test was performed shall be marked on the ELT external casing in a legible and permanent manner.

3. Fault Isolation

A. Self-Test Error Troubleshooting Guidelines

1) Table 6 describes the ELT self-test LED error codes (i.e., flash codes), their probable causes, and possible solutions. The 5-flash error is not present when the ELT is programmed with a serial user protocol (short message).

NOTE: Upon activation, the LED will display a long single flash, which is normal. Any self-test error codes will display following this initial flash. Do not confuse the initial flash with a 1-flash error code. If there are multiple errors, there is a 0.5 to 1.0 second pause between each error code.

CODE	PROBABLE CAUSE	POSSIBLE SOLUTION
1-Flash	Indicates a G-switch loop open (Pins 12 and 13)	
	Remote switch harness connector loose or disconnected at ELT	Check connector and tighten as necessary
	ELT connector pins bent or broken	Check condition of connector pins and repair or replace as necessary
	Connector pins 12 and 13 jumper open (internal to remote switch harness connector at ELT end)	Repair open jumper
2-Flash (long/short)	Indicates a programming adapter problem	
	Jumper missing between Pin 3 and Pin 4 of ELT plug or connection interrupted and Programming Adapter (PA) not in use	Install jumper or repair connection
	PA is used and not programmed	Program PA - See Appendix B - Programming Adapter Installation and Operation
	PA is used and there is a communications or wiring error	Repair or replace as necessary
3-Flash	Indicates a 406 MHz transmission problem	
	Open or short condition on antenna output or coax cable	Verify the coax cable/antenna is connected and in good condition Perform continuity check of center conductor and shield Check for a shorted cable
		Check for intermittent connection in the coax cable

CODE	PROBABLE CAUSE	POSSIBLE SOLUTION
3-Flash (cont.)	Antenna or installation faulty	Check with a VSWR meter. Check antenna for opens, shorts, or a resistive ground plane connection
	Impedance presented by antenna	Lengthen or shorten antenna coax cable length by 4 to 6 inches
	Insufficient ground plane	Provide ground plane at least 12 inches in diameter
	Upright metal structure obstructing antenna causing re-radiation	Stay at least 10-12 inches away from upright metal structures
	Low power output	Battery low
		3A fuse on battery pack circuit board faulty
	Improper programming	Verify 406 MHz programming
	Transmitter module faulty	Cannot be repaired in field - Return to factory for servicing
5-Flash	Indicates there is no navigation position data present	
	Aircraft navigation system off	Turn on navigation system
	Faulty system interface wiring or connections	Check wiring and connections for continuity and security
7-Flash	Indicates a battery problem	
	Operating time is >1 hour	Replace battery pack
	Electrical circuits faulty	

Table 6 ELT Self-Test Error Codes Troubleshooting Guide

B. ELT Troubleshooting Guidelines

1) Table 7 provides ELT troubleshooting guidelines for installation and operational issues.

SYMPTOM	PROBABLE CAUSE	POSSIBLE SOLUTION
Remote switch LED always on (steady)	Improper wiring	Verify wiring
	Short circuit	Check for frayed insulation
		Verify integrity of all crimp and solder connections
ELT will not turn off	Battery too low to support 406 burst and causes circuit to reset	Remove battery pack to disable ELT and replace battery pack
	Turn off ELT using local switch - If ELT turns off:	
	Defective remote switch harness reset circuit wiring	Check wiring continuity and repair as necessary
	Defective remote switch	Replace remote switch
	If ELT does not turn off using local switch:	
	ELT defective	Remove battery pack to disable ELT and return ELT to factory for servicing

Table 7 ELT Troubleshooting Guide

REMOVAL

1. ELT

A. ELT Removal

1) See Figure 13 ELT Removal Sequence.

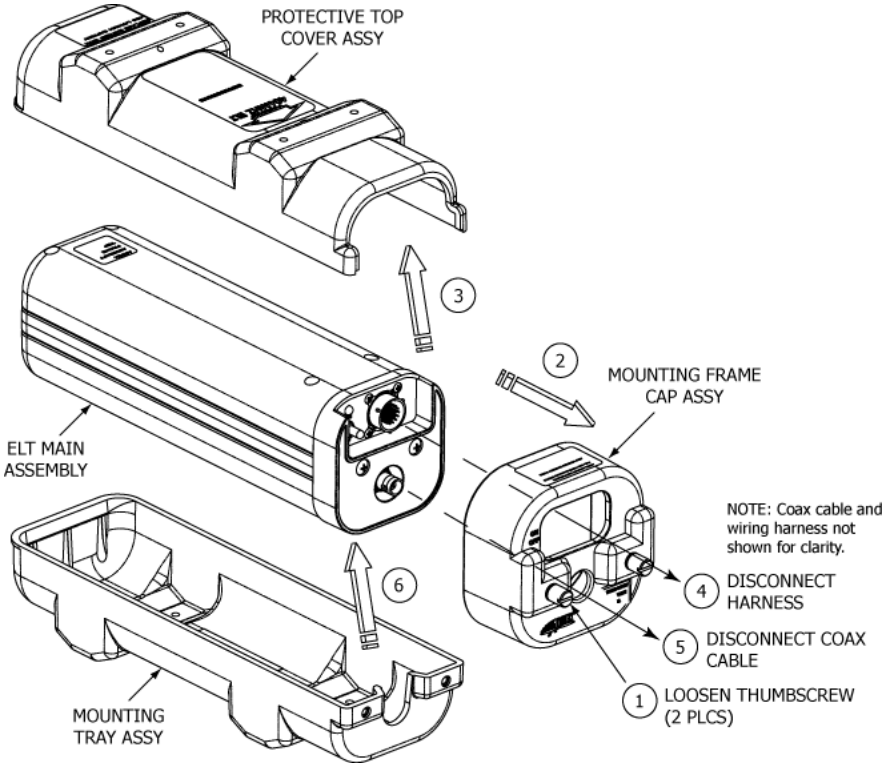

Figure 13 ELT Removal Sequence

2) Loosen the mounting frame cap thumbscrews.
3) Slide the mounting frame cap back away from the ELT.
4) Lift the protective top cover up, away from the ELT and set it aside.
5) Disconnect the antenna coax cable from the ELT.
6) Disconnect the harness receptacle from the ELT, if necessary.

   NOTE: The receptacle may disconnect when the mounting frame cap is pulled back.

7) Lift the ELT up from the connector end.

   NOTE: Careful use of a flat blade screwdriver as a lever will make this step easier.

8) Slide the ELT up and out, away from the mounting tray.

2. Battery

A. Battery Pack Removal

CAUTION: THE BATTERY PACK CONTAINS ELECTROSTATIC DISCHARGE SENSITIVE (ESD) COMPONENTS AND, AS SUCH, IT MUST BE HANDLED WITH CARE. IF POSSIBLE, WEAR A GROUNDED WRIST STRAP WHEN HANDLING THE BATTERY PACK DURING INSTALLATION ACTIVITIES. TAKE PARTICULAR CARE TO AVOID TOUCHING THE EXPOSED CIRCUIT BOARD AND CONNECTOR PINS ON THE BOARD.

CAUTION: THE BATTERY PACK IS CONNECTED TO THE ELT VIA SHORT INTERCONNECT HARNESSES, WHICH LIMITS THE DISTANCE THE TWO COMPONENTS CAN BE SEPARATED UNTIL THE HARNESSES ARE DISCONNECTED.

1) See Figure 14 Battery Pack Removal.

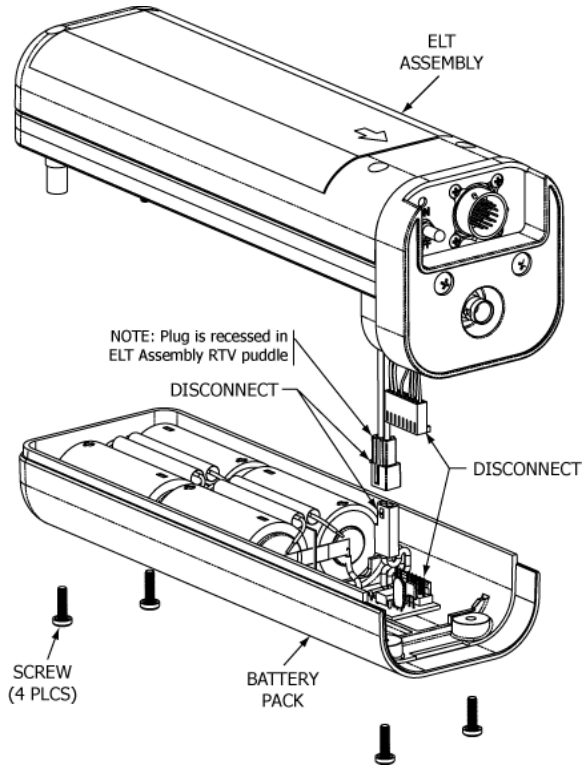

Figure 14 Battery Pack Removal

2) Turn the ELT upside down, such that the battery pack is bottom side up.
3) Remove the four retaining screws.
4) Lay the ELT on its side, while keeping the ELT and battery pack securely held together.
5) Separate the battery pack from the ELT, taking care not to put strain on the short interconnect harnesses.
6) Disconnect the large harness from the 8-pin header on the small circuit board mounted in the battery pack.
7) Disconnect the battery pack 2-wire harness from the connector recessed in the ELT body.

3. Material or Equipment Return

A. Shipment Information

1) If any material or equipment is to be returned to the factory, under warranty or otherwise, ACR Electronics, Inc. must be notified prior to shipment with the following information:
   a) Model and serial number of equipment being returned
   b) Date purchased
   c) Date placed in service
   d) Number of hours in service
   e) Nature and cause of failure
   f) Remarks, if any

B. Return Material Authorization

1) Upon receipt of such notice, ACR Electronics, Inc. will issue a Return Material Authorization (RMA) number which then authorizes return of the material or equipment to the following address:

Repair and Overhaul

ACR Electronics, Inc.

5757 Ravenswood Road

Fort Lauderdale, FL 33312 USA

Phone: (954) 981-3333

Fax: (954) 983-5087

   a) Failure to obtain a RMA number and provide the details required may cause unnecessary delay and/or rejection of the returned material or equipment.
   b) All material or equipment returned to the factory must be freight prepaid.
   c) Acceptable methods of shipment for international return are Airborne, Burlington Air, DHL, Emery, Federal Express, UPS International, and World Wide only.

<u>NOTE</u>: Do not use "International Commercial Airlines", such carriers may cause a loss of returned material or equipment.

INSTALLATION

1. Regulatory Requirements and Guidelines

A. For US Registered aircraft:

WARNING: FAILURE TO REGISTER THIS ELT WITH NATIONAL OCEANIC AND ATMOSPHERIC ADMINISTRATION (NOAA) BEFORE INSTALLATION COULD RESULT IN A MONETARY FORFEITURE BEING ISSUED TO THE OWNER.

1) To enhance protection of life and property, it is mandatory that each 406.0-406.1 MHz ELT must be registered with NOAA before installation and that information be kept up-to-date. In addition to the identification plate or label requirements, each 406.0-406.1 MHz ELT is provided on the outside with a clearly discernible permanent plate or label containing the following statement: "The owner of this 406.0-406.1 MHz ELT must register the NOAA identification code contained on this label with the National Oceanic and Atmospheric Administration, whose address is:

NOAA/SARSAT Beacon Registration

NSOF E/SPO53

1315 East West Hwy

Silver Spring, MD 20910-3282

2) Aircraft owners must advise NOAA in writing upon change of aircraft or ELT ownership, or any other change in registration information. Fleet operators must notify NOAA upon transfer of ELT to another aircraft outside of the owner's control, or another change in registration information. NOAA will provide registrants with proof of registration and change of registration postcards.

B. TSO C126, Paragraph D

1) TSO approval of the ELT does not constitute installation approval. All ELT installations are subject to field approval for a given airframe by either an approved FAA DER or FAA FSDO. For installations outside the US, contact your local civil aviation regulatory agency for details.
   a) The remote switch is a requirement of TSO C126 and installation is not optional.
   b) The buzzer is a requirement of TSO C126 and installation is not optional.

C. FAA

1) This manual constitutes supporting data, as described in AC43.9-1, Paragraph 6.h.(2) and AC 43-210, Chapter 2, Paragraph 201(a)(6), and as such may be used as support for FAA field approval of the ELT installation.
2) In addition to the procedures outlined herein and in accordance with FAR Part 43, the installer must adhere to the aircraft manufacturer's instructions and recommendations and the guidelines provided by FAA Advisory Circular AC 43.13-2 "Acceptable Methods, Techniques, and Practices - Aircraft Alterations", specifically Chapters 1 through 3, 11, and 13.
3) All installation processes and interconnections related to interfacing with the aircraft navigation system should adhere to the guidelines and requirements set forth in AC 20-130 and AC 138. In addition, the Global Positioning System/Flight Management Computer (GPS/FMC) manufacturer's installation instructions must be consulted regarding details specific to the GPS/FMC and the interface with the C406-N Series ELT.
4) By signing the aircraft logbook, and FAA Form 337, the installer is stating that the installation has been performed in accordance with current FAR requirements and the procedures outlined herein.

The completed Form 337 is provided to the FAA and also becomes a permanent part of the aircraft maintenance records in accordance with AC43-9, Paragraph 17.

D. Canada

1) All installations must be performed in accordance with Canadian Aviation Regulations (CAR) Part V, Chapter 551, and Paragraph 551.104.

E. Other Countries

1) Installations in aircraft outside of the United States and Canada must be performed in accordance with applicable regulatory authority rules and regulations.

F. RTCA

1) DO-204, § 3.1.8 guidelines for mounting a ELT:
   a) The ELT shall be mounted to primary aircraft load carrying structures, such as trusses, bulkheads, longerons, spars, or floor beams.
   b) The mounts shall have a maximum static local deflection no greater than 0.1 inches (2.5 mm) when a force of 100 lbs (450 newtons) is applied to the mount in the most flexible direction. Deflection measurements shall be made with reference to another part of the aircraft not less than 1 foot (0.3 meters) nor more than 3 feet (1.0 meters) from the mounting location.
2) DO-182, § 6.2.2.b recommends that:
   a) To maximize the probability of the ELT transmitting a detectable signal after a crash, all ELT system components, which must survive a crash intact, e.g., transmitter and external antenna, should be attached to the airframe in such a manner that the attachment system can support a 100 g load, (ELT weight x 100, ELT antenna weight x 100, etc.) applied through the center of gravity of the component (ELT, antenna, etc.) in the plus and minus directions of the three principal axes of the aircraft.
   b) Post-crash critical components of the ELT system, e.g., transmitter and external antenna, should be mounted as close to each other as possible.
   c) The antenna coax cable should not cross any production breaks, e.g., major structure sections, such that the ELT and antenna are in the same section of the aircraft and as close together as possible.
   d) If the ELT and external antenna are on opposite sides of an airframe production break, the components should be secured to each other by a tether that can support a 100 g load (ELT weight x 100). The interconnecting antenna-to-ELT coax cable should have sufficient slack on both ends that it will not be subjected to any tensile load and should be tied loosely to the tether.

2. Mounting Tray

A. Location

<u>CAUTION</u>: MANY ORIGINAL ELT INSTALLATIONS ARE INADEQUATE AS FAR AS UNIT LOCATION AND SURFACE RIGIDITY ARE CONCERNED. BECAUSE OF THE CRITICAL FUNCTION AN ELT PERFORMS, IT IS IMPORTANT THE INSTALLATION FOLLOWS THE INSTRUCTIONS AND RECOMMENDATIONS HEREIN.

<u>CAUTION</u>: THE MOUNTING SURFACE MUST BE EXTREMELY RIGID; THEREFORE, MOUNTING AN ELT DIRECTLY TO THE AIRCRAFT SKIN IS UNACCEPTABLE. MOUNTING THE ELT DIRECTLY TO THE AIRCRAFT SKIN INDUCES "CRASH HIDING" VIBRATIONS AND PROVIDES A VERY POOR MOUNTING SURFACE.

<u>CAUTION</u>: AVOID LOCATING THE ELT WHERE IT WILL BE SUBJECTED TO UNPROTECTED EXPOSURE TO HARSH CHEMICAL FLUIDS SUCH AS DEICING COMPOUNDS. THESE TYPES OF CHEMICAL FLUIDS CAN PROMOTE CRACKING AND FRACTURING OF THE ELT MOUNTING FRAME AND HOUSING COMPONENTS BY DEGRADING THE STRUCTURAL INTEGRITY OF THESE COMPONENTS. THESE SAME CHEMICAL AGENTS MAY ALSO CAUSE CORROSION OF ELECTRICAL CONNECTIONS.

1) Select a suitable location for the mounting tray. See Figure 15 C406-N Series ELT Outline and Dimensions on page 48. Refer to these dimensions when determining mounting location.

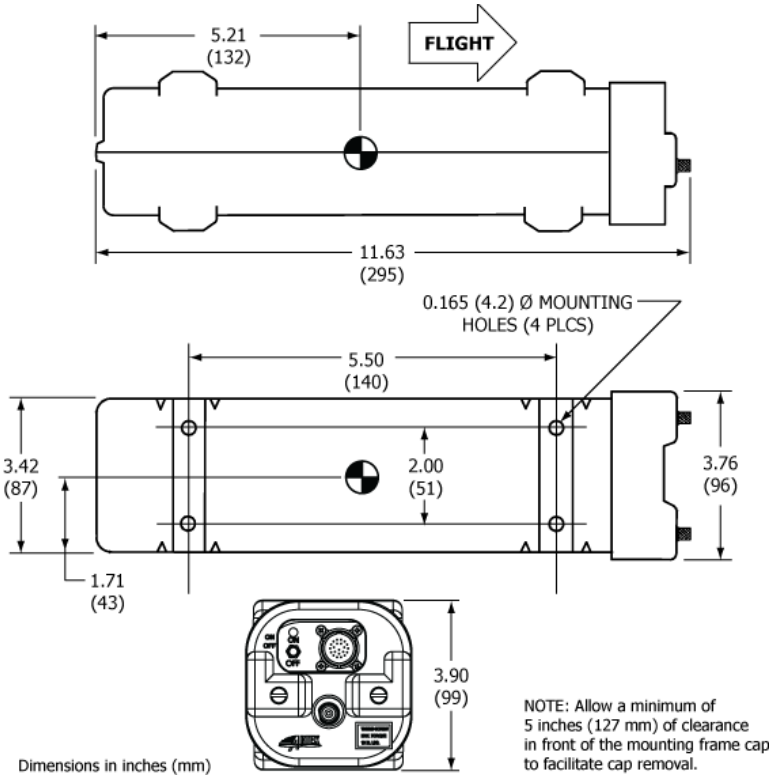

Figure 15 C406-N Series ELT Outline and Dimensions

2) Locate the mounting tray such that the ELT mounting frame cap has at least 5 inches (127 mm) of clearance for installation and removal.
3) Mount the ELT as far aft as practical, but where it can be easily retrieved for maintenance.

   NOTE: Statistics show that the tail section of an airplane is likely to be less damaged during a crash; therefore, providing a good mounting environment for the ELT.

4) Additional installation guidance may be found in AC 43.13-2, Chapter 2, Paragraph 28, which specifically addresses ELT installations.

B. Installation

1) See Figure 16 Typical Mounting Tray Installation.

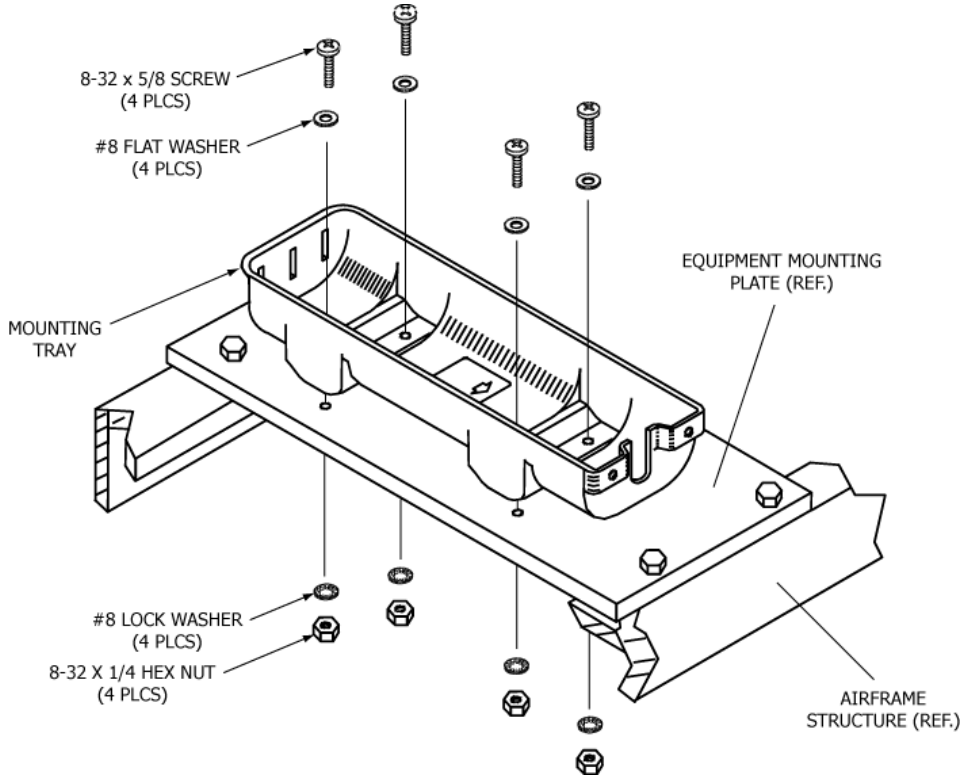

Figure 16 Typical Mounting Tray Installation

2) Install the necessary mounting structure as appropriate for the specific installation.
3) Align the mounting tray (452-5050) on the mounting structure, such that the arrow on the tray is within 10° of the longitudinal axis of the aircraft and pointing in the direction of flight.

   NOTE: Refer to Helicopter Installations on page 68 for guidelines on ELT orientation in a helicopter.

4) Mark the four holes needed for mounting the tray, using the tray as a pattern. The hole pattern is also illustrated in Figure 15 C406-N Series ELT Outline and Dimensions on page 48.
5) Drill the four mounting holes with a #19 or 4.25 mm drill.
6) Install the mounting tray with the 8-32 x 5/8" SS pan head Philips screws, flat washers, lock washers, and nuts provided in the installation kit (455-7421), as shown in Figure 16 Typical Mounting Tray Installation.

   NOTE: The use of substitute mounting hardware is acceptable provided the hardware used meets or exceeds the strength and corrosion resistance of the original hardware.

   a) Torque to 12 ±1 lb-in (136 ± 11 N•cm).

3. Antenna

A. Selection

1) Use only antennas approved for use with the C406-N Series ELT. The ELT will not work properly without being connected to an antenna for which it was designed.
2) Verify the antenna selected matches the requirements of the specific installation. Considerations include aircraft maximum rated speed, location restrictions, and any other considerations specific to the installation.

B. Location

1) Select a suitable location for the antenna.
   a) Place the antenna in a location where the antenna can be installed within 15° of vertical and with at least 30 inches (762 mm) of clearance from other antennas, particularly VHF, in accordance with RTCA/DO-204, § 3.1.10.2.

   NOTE: AC 43.13-2, Chapter 3 recommends a minimum distance of 36 inches (914 mm) clearance between antennas.

   b) Additional location guidance may be found in AC 43.13-2, Chapter 3, which deals specifically with antenna installations.

C. Installation

NOTE: Refer to the airframe manufacturer's written instructions and AC 43.13-2, Chapter 3 for antenna installation practices and requirements.

1) Install a doubler plate if necessary to meet rigidity requirements. A 20 lb (9.1 kg) force applied to the antenna in all directions should not cause an appreciable distortion in the aircraft skin.
2) Install a ground plane if necessary. In certain applications, particularly those where antennas are installed on composite, fabric, or wood airframes, a ground plane is required.
3) Drill the antenna mounting holes and a coax cable connector hole referring to the appropriate antenna illustration for hole patterns and hole sizes.
   a) See Figure 17 Rod Antenna 110-338 and Whip Antenna 110-343 Outlines and Dimensions on page 52 and Figure 18 Blade Antennas 110-340 and 110-341 Outlines and Dimensions on page 53.
4) Mount the antenna referring to the appropriate antenna illustration for hardware requirements, torque, and other applicable installation requirements.
5) A coax cable, 6 feet (1.8 m) long, is provided as part of the ELT kit.

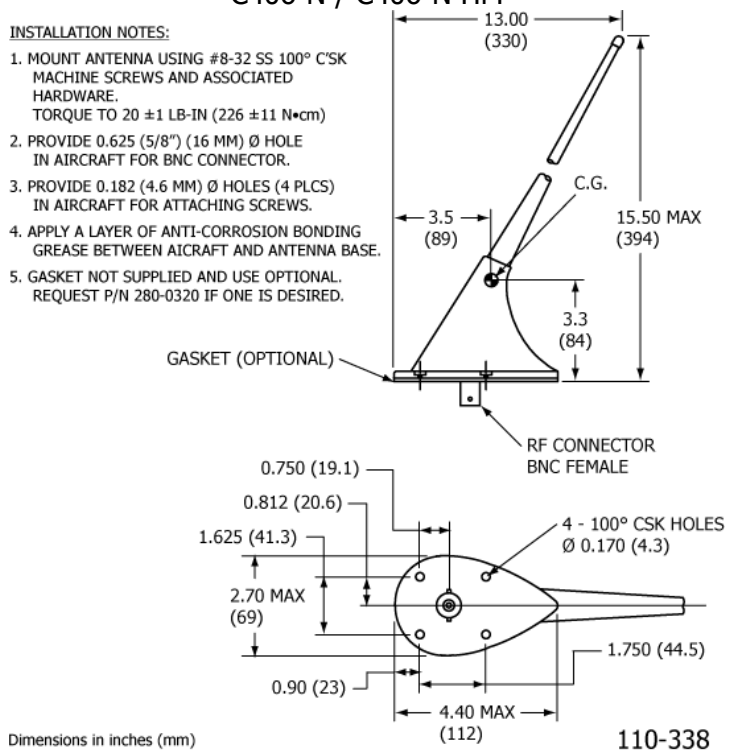

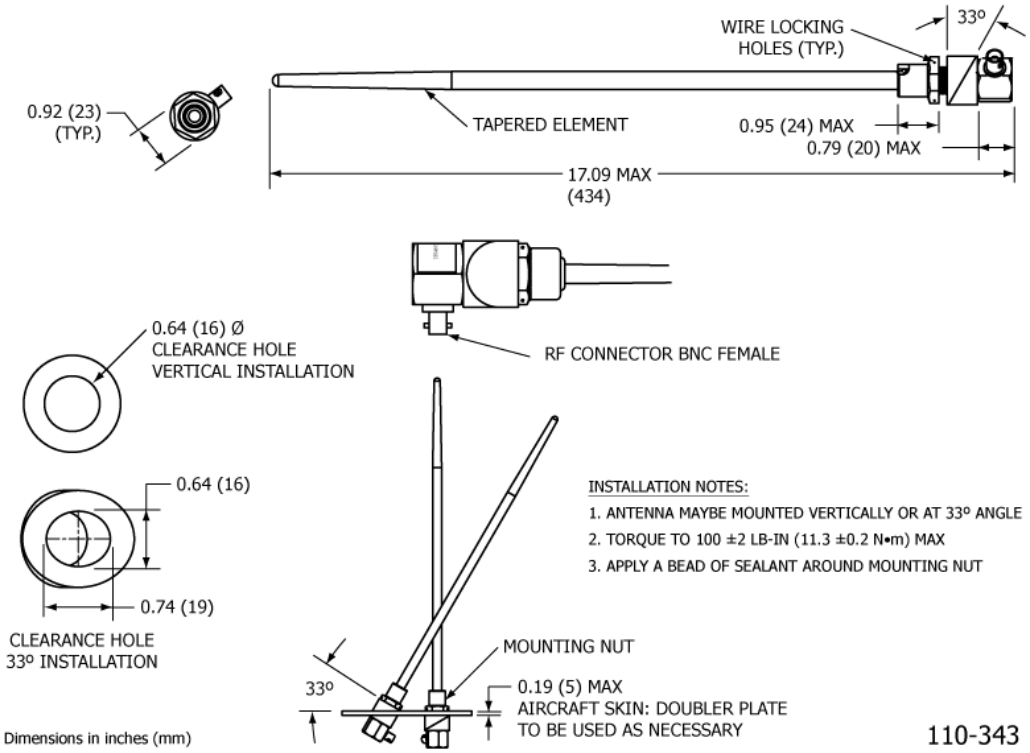

Figure 17 Rod Antenna 110-338 and Whip Antenna 110-343 Outlines and Dimensions

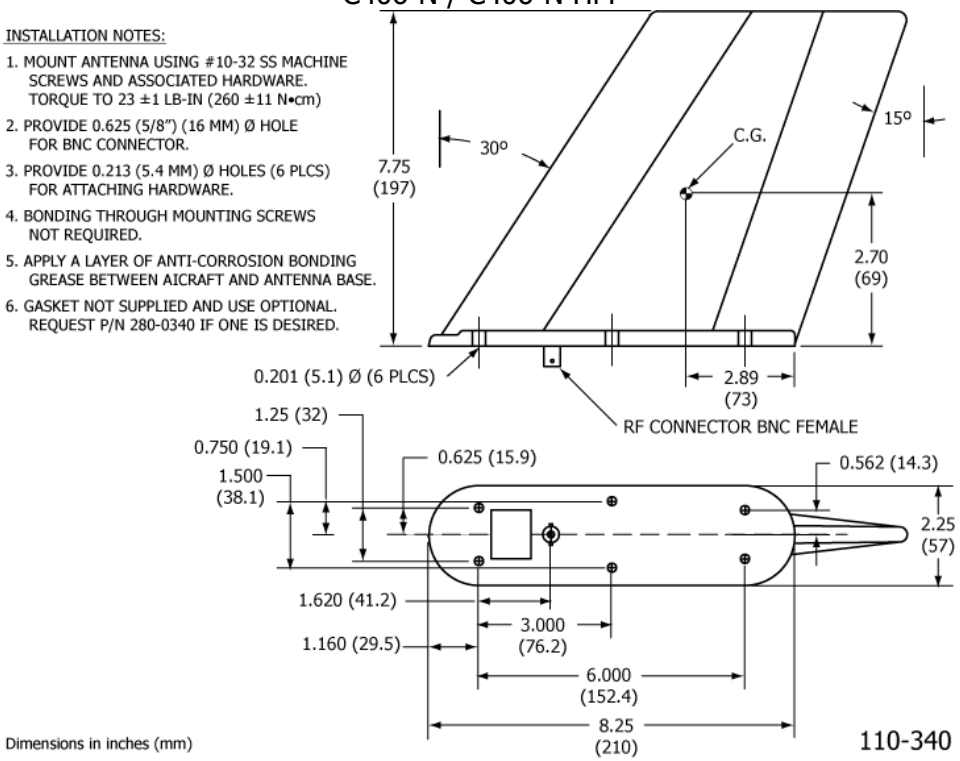

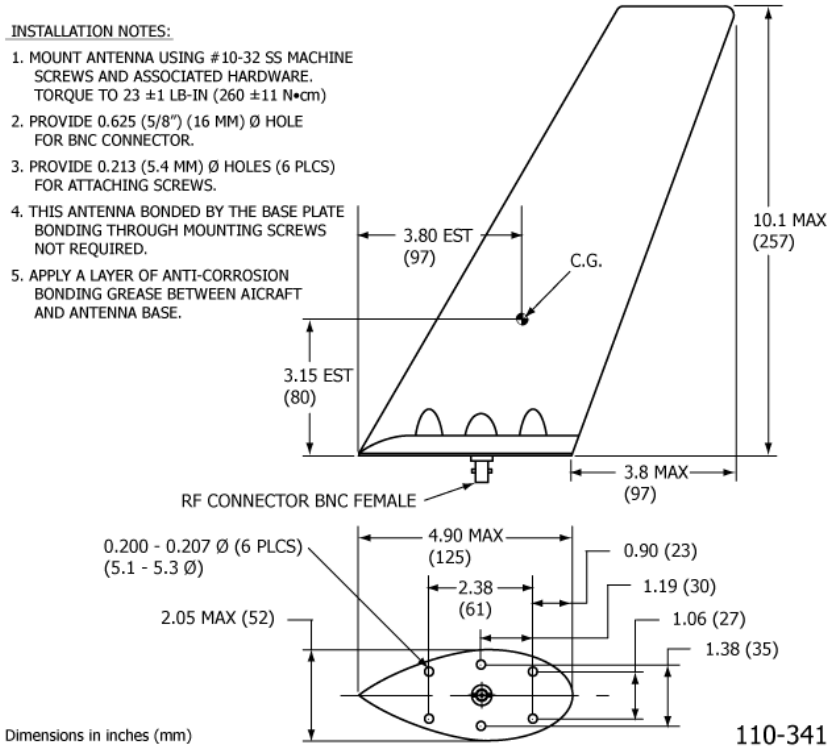

Figure 18 Blade Antennas 110-340 and 110-341 Outlines and Dimensions

4. Remote Switch

A. Location

1) Select a suitable location for the remote switch assembly. The switch assembly must be mounted in the cockpit where the pilot can easily reach the switch and see the LED.

NOTE: This procedure is applicable to the most commonly used remote switch (345-6196-04). If an optional switch is installed in lieu of this one, the applicable installation instructions should be consulted.

NOTE: Refer to Appendix C – Remote Switch Control Panel Option on page 76 for installation instructions covering the optional 453-0161 (G737) remote control panel.

2) The switch assembly requires a space approximately 2.0 x 1.3 in. (51 x 33 mm) on the panel surface and behind the panel. See Figure 19 Remote Switch Outline and Dimensions.

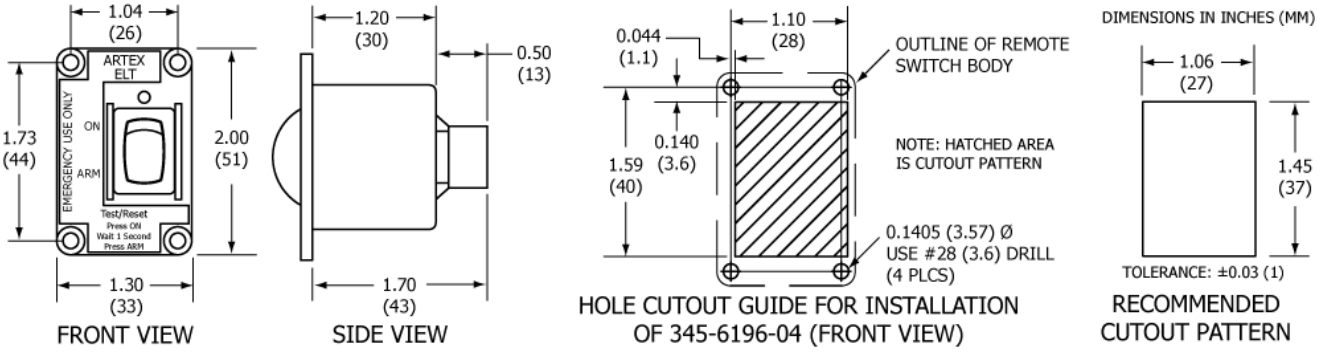

Figure 19 Remote Switch Outline and Dimensions

B. Installation

1) Mark out the cutout on the cockpit panel. See Figure 19 Remote Switch Outline and Dimensions.
2) Fit the switch assembly into the cutout and mark the four screw holes, then remove the switch.
3) Drill the screw holes with a #28 or 3.6 mm drill.
4) Install the switch assembly using the 4-40 x ½ in. pan head screws, nuts and lock washers provided in the remote switch installation kit (455-6196).

NOTE: Step 4 may be completed after wiring is completed and the harness plug has been plugged into the switch assembly, in accordance with the requirements of Remote Switch Final Installation on page 63. If such is the case, perform a fit check at this time.

5) Apply the "For Aviation Emergency Use Only/Unauthorized Use Prohibited" placard (591-0428), provided in the installation kit, as close to the switch as practical.

5. Buzzer

A. Location

CAUTION: PLACING THE BUZZER IN THE COCKPIT IS NOT RECOMMENDED DUE TO THE POTENTIAL FOR DISTRACTION. THE BUZZER PRODUCES A LOUD, SIREN-TYPE SOUND WHEN THE ELT IS ACTIVATED. SINCE THE BUZZER OPERATES IN TANDEM WITH THE COCKPIT LED, IT WOULD ONLY SERVE AS A REDUNDANT WARNING INDICATOR IN THE COCKPIT.

1) Select a suitable location for the buzzer.

NOTE: The buzzer may be located anywhere in the aircraft; however, the recommended location is near the ELT, as the buzzer is loud enough to be heard outside the aircraft when the engine(s) is not running. When the engine(s) is running, the LED on the cockpit remote switch assembly will warn the pilot the ELT is active.

B. Installation

1) See Appendix C – Remote Switch Control Panel Option on page 76 for instructions on installation of an alternate, modified buzzer used with the optional remote switch control panel in Boeing configurations.
2) Fabricate a bracket suitable for supporting the buzzer. Buzzer dimensions are shown in Figure 20 Buzzer Outline and Dimensions.

NOTE: Refer to the aircraft manufacturer's written instructions or AC 43.13-2, as applicable, for approved bracket fabrication and installation methods.

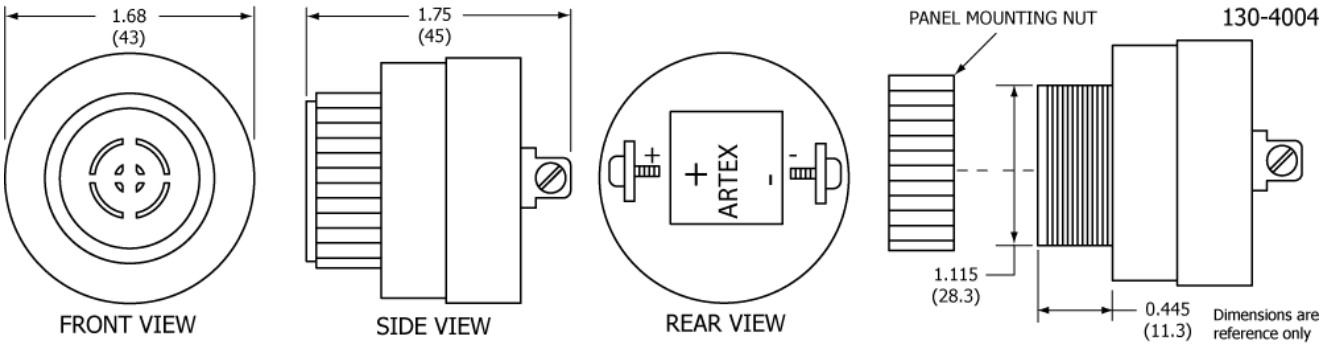

Figure 20 Buzzer Outline and Dimensions

3) Attach the bracket to the airframe such that the buzzer is adequately supported and does not show any significant evidence of distorting the airframe skin.
4) Install the buzzer in the bracket.
   a) Remove the panel mounting nut and insert the buzzer in the bracket.
   b) Install the panel mounting nut and tighten it securely.

6. Wiring

A. General Considerations and Recommendations

CAUTION: IF GROUND OR OTHER CONNECTIONS ARE BROKEN OR OTHERWISE DAMAGED, THE ELT IS STILL CAPABLE OF AUTOMATIC ACTIVATION; HOWEVER, THE COCKPIT REMOTE SWITCH MAY BE INCAPABLE OF RESETTING THE ELT AND OPERATION MAY NOT BE INDICATED ON THE REMOTE SWITCH LED.

CAUTION: INCORRECT TERMINATION OF THE WIRING IN THE CONNECTORS MAY DAMAGE THE ELT, CAUSE TRANSMISSION ISSUES, OR RESULT IN A NON-FUNCTIONING REMOTE SWITCH. VERIFY THE WIRING AGAINST THE WIRING DIAGRAM AND PERFORM A CONTINUITY CHECK TO CONFIRM GOOD CONNECTIONS AND PROPER PIN LOCATIONS.

CAUTION: TO PREVENT INADVERTENT ELT ACTIVATION OR POSSIBLE COMPONENT DAMAGE, DO NOT CONNECT THE HARNESS TO THE ELT OR COCKPIT REMOTE SWITCH UNTIL ALL POWER AND GROUND WIRING CONNECTIONS ARE COMPLETED.

1) The following wiring and grounding considerations and recommendations are applicable:
   a) Minimum 22 AWG wire size.
   b) Shielding is recommended to help prevent EMI and RF interference.
   c) Use high quality conductor meeting MIL-W-16878, M22759, M27500, or a commercial equivalent acceptable for use in aircraft applications.
   d) Provide a "Drip Loop" in the remote switch harness connection to the ELT to divert moisture from the connector. See the list of Acronyms, Abbreviations, and Definitions on page 3.
   e) Provide a "Service Loop" in the remote switch harness connection to the remote switch assembly, such that the assembly can be withdrawn from the panel far enough to easily disconnect the harness plug.
   f) All grounds required for this installation must be common to aircraft ground.

B. Remote Switch Harness Fabrication

1) See Figure 21 Remote Switch Harness Arrangement.
2) Fabricate a 5-wire harness long enough to reach from the ELT to the cockpit remote switch, allowing enough slack to provide a drip loop at the ELT end and a service loop at the cockpit remote switch end.
   a) Strip approximately 0.15 in. (3 mm) of insulation from the remote switch ends of each of the five cable wires and 0.19 in. (5 mm) from the ELT ends.
   b) Dress and tin the bare wires to prevent the strands from fraying during terminal crimping operations.

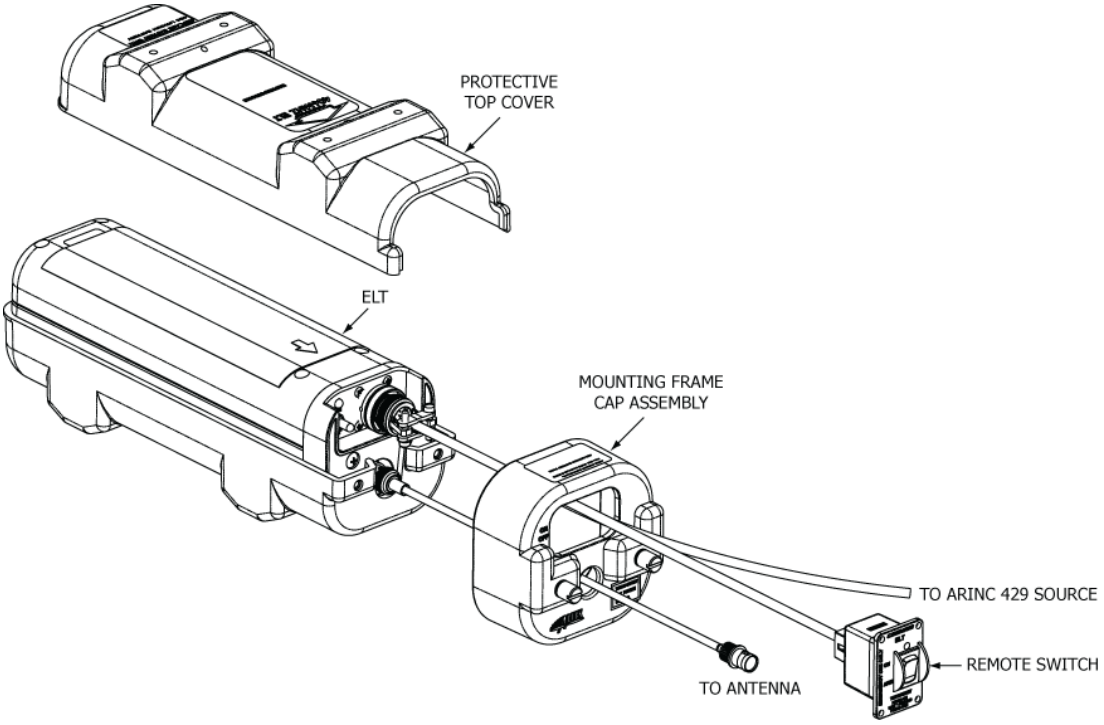

Figure 21 Remote Switch Harness Arrangement

3) Fabricate a shielded, twisted pair of sufficient length to reach from the harness ELT plug to the aircraft navigation system ARINC 429 output.
   a) Strip approximately 0.19 in. (5 mm) from the ELT ends.
   b) Prepare the wire ends at the navigation system ARINC 429 output in accordance with the manufacturer's written instructions.
   c) Dress and tin the bare wires to prevent the strands from fraying during terminal crimping operations.
4) See Figure 22 Remote Switch Harness Wiring Diagram on page 58.

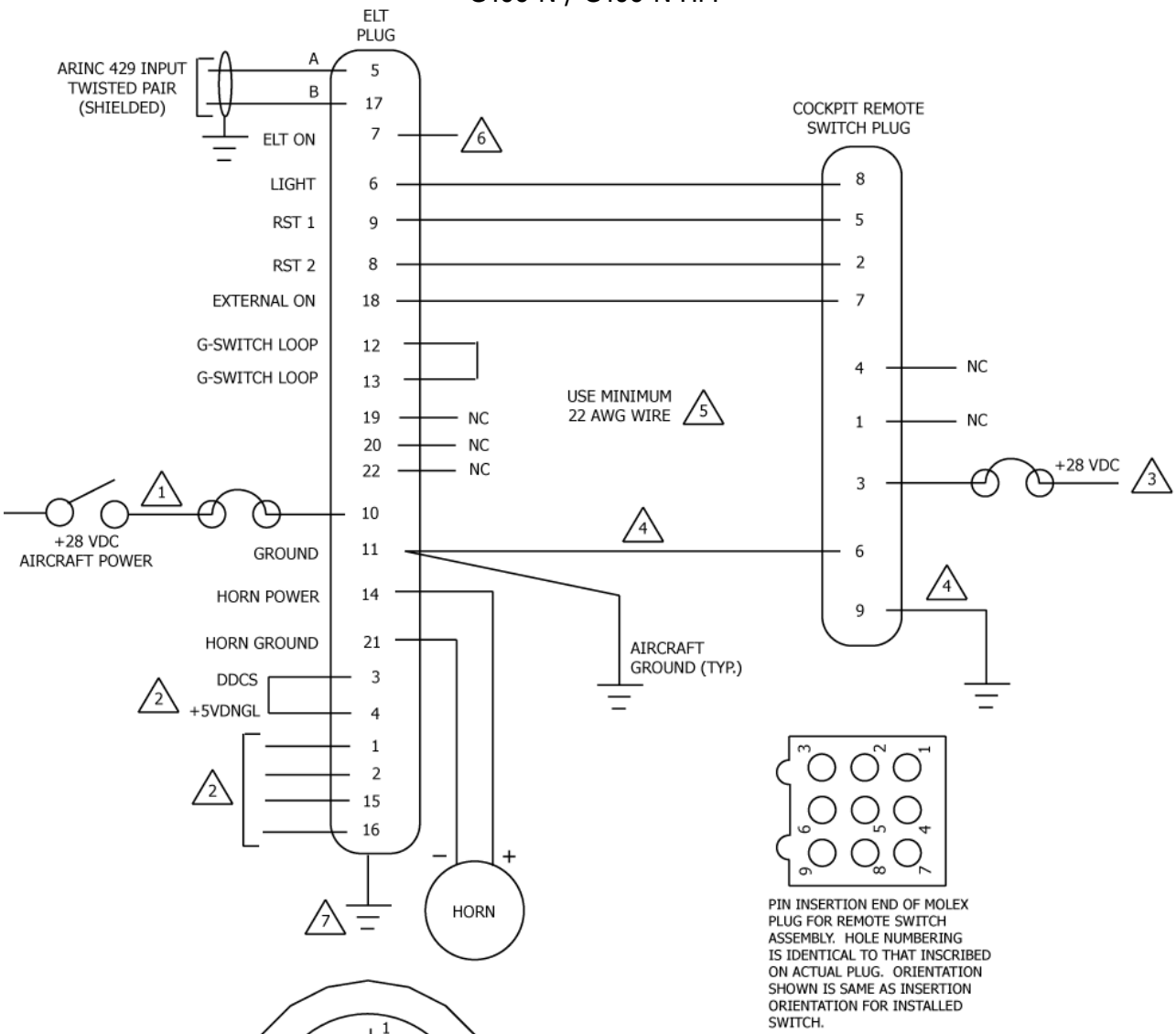

PIN INSERTION END OF MOLEX PLUG FOR REMOTE SWITCH ASSEMBLY. HOLE NUMBERING IS IDENTICAL TO THAT INSCRIBED ON ACTUAL PLUG. ORIENTATION SHOWN IS SAME AS INSERTION ORIENTATION FOR INSTALLED SWITCH.

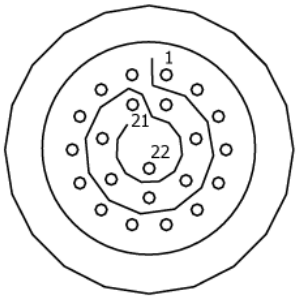

ELT MATING PLUG (CIRCULAR CONNECTOR) PIN INSERTION VIEW

3 CONNECT REMOTE SWITCH POWER DIRECTLY TO AIRCRAFT BATTERY VIA 1-AMP FUSE OR BREAKER. MAXIMUM CURRENT DRAW IS 100 mA.

4 PINS 6 AND 9 OF REMOTE SWITCH ARE INTERNALLY TIED. IF AIRCRAFT GROUND INTEGRITY BETWEEN THE ELT AND REMOTE SWITCH CANNOT BE GUARANTEED, REMOTE SWITCH PIN 6 IS WIRED TO ELT PIN 11 (OR GROUND POINT COMMON TO ELT PIN 11 AS CLOSE TO ELT AS POSSIBLE). IF GROUND INTEGRITY IS GOOD, THE CONNECTION BETWEEN REMOTE SWITCH PIN 6 AND ELT PIN 11 IS NOT REQUIRED.

5 USE OF SHIELDED CABLE IS RECOMMENDED, PARTICULARLY FOR LONG CABLE RUNS AND WHERE EMI IS A CONCERN.

1 SWITCHABLE POWER SOURCE WITH 1-AMP BREAKER OR SLO-BLO FUSE. MAXIMUM CURRENT DRAW IS 120 mA.

2 PINS 3 AND 4 MUST BE JUMPERED UNLESS OPTIONAL PROGRAMMING ADAPTER (PA) IS INSTALLED. SEE APPENDIX B FOR PA INSTALLATION DETAILS (PINS 1, 2, 3, 4, 15, AND 16).

6 SEE APPENDIX C FOR OPTIONAL CONTROL PANEL INSTALLATION DETAILS AND MASTER CAUTION PANEL CONNECTION TO PIN 7.

7 CONNECT STRAIN RELIEF TO AIRCRAFT GROUND AS CLOSE TO ELT AS POSSIBLE.

Figure 22 Remote Switch Harness Wiring Diagram

5) Fabricate the following wires.
   a) Fabricate a ground wire long enough to reach from Pin 11 of the harness ELT plug to aircraft ground.

   NOTE: This wire will be crimped in the same pin as the wire running from Pin 11 of the ELT plug to the cockpit remote switch plug Pin 6, if the Pin 11 to Pin 6 connection is required. See Note 4 in Figure 22 Remote Switch Harness Wiring Diagram on page 58. Alternatively, the wires may be spliced in a manner acceptable to the aircraft manufacturer, or as described in AC 43.13-1, Paragraph 11-167.

   b) Fabricate a ground wire long enough to reach from Pin 9 of the remote switch plug to aircraft ground.
   c) Fabricate a ground wire long enough to reach from the harness ELT plug strain relief to aircraft ground.
   d) Fabricate a power wire long enough to reach from the remote switch plug (Pin 3) to a +28 VDC battery power source.
   e) Fabricate a power wire long enough to reach from the ELT plug (Pin 10) to a +28 VDC power source.
   f) Fabricate two wires of sufficient length to reach from the harness ELT plug to the buzzer.

   NOTE: These wires provide power and ground for the buzzer. Use appropriate means of identification for the wires, such that the wires can be readily identified.

   g) Prepare the wires as follows:
      1. Strip approximately 0.15 in. (3 mm) of insulation from the remote switch wire ends and 0.19 in. (5 mm) from the ELT wire ends.
      2. Dress and tin the bare wires to prevent the strands from fraying during terminal crimping operations.
6) Crimp contact sockets (151-6657) on the harness wire ends at the ELT, as follows:

   NOTE: Use crimp tool M22520/7-01 and die M22570/7-06, or equivalent.

   a) The Pin 11 ground wire. The wire running from Pin 11 to remote switch Pin 6 is terminated in the same pin, if this wire is required. See Figure 22 Remote Switch Harness Wiring Diagram on page 58. Make a note of the wire identification for later reference.
   b) On each of the remaining wire ends at the harness ELT end.
   c) The +28 VDC switchable power source wire.
   d) The buzzer power and ground wires.
   e) On each of the twisted pair ARINC 429 input wires.
7) Crimp appropriately sized ring terminals on the buzzer ends of the buzzer power and ground wires.
8) Crimp appropriately sized ring terminals on the airframe ends of the following wires:
   a) Harness ELT plug Pin 11 ground wire.
   b) Harness ELT plug strain relief ground wire.
   c) Remote switch plug ground wire.
9) Crimp appropriately sized ring terminals on the airframe ends of the following wires:

NOTE: If desired, the power wires may be spliced or otherwise connected to their individual power sources in a manner acceptable to the aircraft manufacturer, or as described in AC 43.13-1, Paragraph 11-167.

a) Harness ELT plug +28 VDC switchable power source wire. Use a power source controlled by the avionics switch or master switch. This circuit draws power at all times and will drain the battery if not switched off. See Cockpit Remote Switch Power Connection on page 62 for circuit protection requirements.
b) Harness remote switch plug +28 VDC battery power source wire. This power source must be direct from the battery. Use the clock circuit or a similar source of battery power. See ELT Power Connection on page 62 for circuit protection requirements.

10) Provide a means of termination on the airframe end of the ARINC 429 twisted pair of wires compatible with the aircraft navigation system ARINFC 429 output source.
11) Crimp female terminal pins (151-6628) to the cockpit remote switch end, as follows:

NOTE: Use Molex crimp tool 63811-3300, or an equivalent tool for 0.062 in. terminal pins.

a) Each harness wire.
b) Remote switch ground wire.
c) Remote switch +28 VDC battery power wire.

12) Bundle the wiring into a complete harness, with breakouts as appropriate, such that the wiring can be properly supported and attached to the airframe. Refer to the aircraft manufacturer's written instructions or AC 43.13-1, Chapter 11, § 9 through 12, as applicable.

C. ELT 22-Pin Plug Installation

1) Refer to Figure 22 Remote Switch Harness Wiring Diagram on page 58 and Figure 23 Harness ELT 22-Pin Plug Arrangement below.

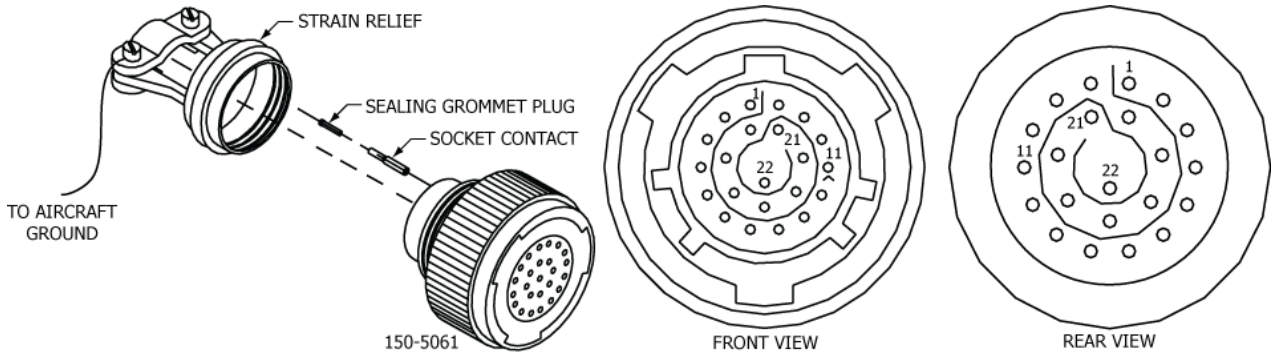

Figure 23 Harness ELT 22-Pin Plug Arrangement

2) Fabricate two short jumper wires, approximately 1.5 in. (38 mm) long.
   a) Strip approximately 0.19 in. (5 mm) of insulation from both ends of each of the wire.
   b) Dress and tin the bare wire ends to prevent the strands from fraying during terminal crimping operations.
   c) Crimp contact sockets (151-6657) on the wire ends.

NOTE: Use crimp tool M22520/7-01 and die M22570/7-06, or equivalent.

3) Terminate the jumpers in the harness ELT 22-position plug (150-5061) as follows:

   CAUTION: THE ELT WILL NOT AUTOMATICALLY ACTIVATE IF THE G-SWITCH LOOP JUMPER (PINS 12 AND 13) IS NOT PROPERLY INSTALLED IN THE HARNESS ELT PLUG.

   a) Insert the contact sockets of one jumper in Pins 12 and 13 (G-switch loop).

   NOTE: Use insertion tool MS27495A22MS, or equivalent, and extraction tool MS27495R22MS, or equivalent.

   NOTE: Each contact socket should "click" into place when properly seated.

   b) Insert the contact sockets of the other jumper in Pins 3 and 4.
4) Slip the strain relief (151-5061) over the wiring terminating in the harness ELT plug.

   NOTE: Slide heat shrink tubing of suitable size over the wires, if desired.

5) Insert the harness and other wiring contact sockets in the harness ELT plug as follows:
   a) Harness wires connecting to the remote switch plug.
      1. Make a record of wire identification and pin relationships for reference when terminating the harness wires in the remote switch plug.
   b) The airframe ground wire (Pin 11).
   c) The buzzer power and ground wires (Pins 14 and 21, respectively).
   d) The +28 VDC power source wire.
   e) The ARINC 429 twisted pair wires (Pins 5 and 17).
6) Fill the empty plug pin locations as follows:

   NOTE: Filling the empty plug pin locations is important not only for preventing moisture penetration, but also preventing the inserted contact sockets from cocking and possibly causing a short circuit by touching each other.

   a) Insert contact sockets in all empty pin locations.
   b) Insert sealing grommet plugs (151-6658), large diameter first, in the empty contact sockets.
7) Shrink the heat shrink tubing if installed in Step (4).
8) Screw the strain relief onto the plug.
9) Tighten the strain relief clamp.

D. Cockpit Remote Switch 9-Pin Plug Installation

1) Inert the wiring pins in the 151-5009 Molex 9-pin cockpit remote switch plug. See Figure 22 Remote Switch Harness Wiring Diagram on page 58.
   a) Insert each harness female pin into the plug.

   NOTE: Refer to the wire identification and pin relationships recorded in Step C (5)(a)1.

NOTE: Terminal pins may be removed from the plug using Molex extraction tool 11030002, or equivalent.

b) Insert the remote switch power wire female pin into Pin 3 of the plug.
c) Insert the remote switch ground wire into Pin 9 of the plug.

E. Wiring Installation

1) Route the remote switch harness wire bundle and breakout wiring through the airframe.
2) Route the antenna coax cable through the airframe.

NOTE: A longer coax cable, up to 20 feet (6.1 m), may be fabricated if the cable provided is too short. Use RG-142 or RG-400 coax cable.

3) Support the wiring and coax cable by clamping or other suitable means, such that the wiring is properly supported and protected from chaffing and strain. Refer to the aircraft manufacturer's written instructions or as described in AC 43.13-1, Chapter 11, § 9 through 12, as applicable.

F. Antenna Connection

1) Connect the coax cable to the antenna, making sure the cable is routed and supported such that there is no tensile load (i.e., strain) on the connection.

G. Cockpit Remote Switch Power Connection

1) Connect the remote switch power wire directly to battery power using a 1-amp in-line fuse or circuit breaker.

NOTE: If the wire is spliced, fabricate the splice in a manner acceptable to the aircraft manufacturer or as described in AC 43.13-1, § 13.

NOTE: This power source provides energy for the remote switch assembly LED, but has no effect on switch functions, as the switch will control the ELT with or without power.

H. ELT Power Connection

1) Connect the ELT power wire to a +28 VDC source controlled by the avionics switch or master switch using a 1-amp, in-line, slo-blo fuse or circuit breaker.

NOTE: If the wire is spliced, fabricate the splice in a manner acceptable to the aircraft manufacturer or as described in AC 43.13-1, § 13.

NOTE: This power source provides energy for the ELT navigation functions.

I. Airframe Ground Connections

1) Connect the following grounds to the airframe in accordance with the aircraft manufacturer's written instructions or as described in AC 43.13-1, Chapter 11, § 15. See Figure 22 Remote Switch Harness Wiring Diagram on page 58.
   a) Harness ELT plug ground from Pin 11.
   b) Harness ELT plug strain relief ground.
   c) Harness remote switch plug ground from Pin 9.
   d) ARINC 429 twisted pair shield ground.

J. Buzzer Connection

1) Connect the power wire to the buzzer positive (+) terminal.
2) Connect the ground wire to the buzzer negative (–) terminal.

K. Remote Switch Final Installation

1) Insert the harness plug into the remote switch receptacle.
2) Install the remote switch assembly, referring to page 54 for instructions.

7. ELT Installation and Test

A. Installation

1) See Figure 24 ELT Installation Sequence.

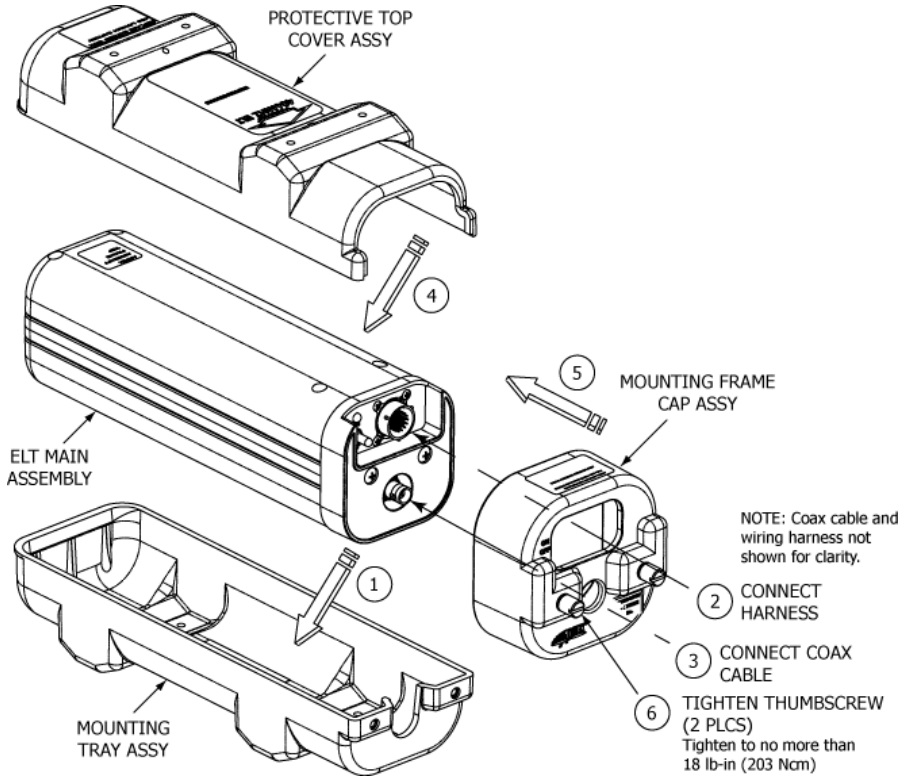

Figure 24 ELT Installation Sequence

2) Verify the ELT local switch is in the "OFF" position.
3) Insert the ELT into the mounting tray at an angle, such that the locking ears at the end opposite the direction-of-flight arrow fit into the mounting tray locking slots.
4) Press the ELT down until it is fully seated in the mounting tray.
5) Install the protective top cover assembly (452-3052) on the ELT by fitting the cover locking slots over the locking ears on the ELT.
6) Push the cover toward the connector end of the ELT and seat it down in place on the ELT.
7) Route the antenna coax cable and remote switch harness plug through the appropriate access holes in the mounting frame cap (452-5066).
8) Connect the antenna coax cable to the ELT.
9) Connect the 22-pin harness plug to the ELT.
10) Slide the mounting frame cap into place over the mounting tray and protective top cover.
11) Secure the mounting frame cap to the mounting tray with the thumbscrews and tighten them to no more than 18 lb-in (203 N•cm).
12) Tie up excess slack in the harness and coax cable, such that they form drip loops and there is enough slack, approximately 5 in. (127 mm), to allow the mounting frame cap to be easily pulled back.

NOTE: Steps 1 through 11 are applicable any time the ELT has been removed and undergoes reinstallation. Step 12 is only applicable at initial installation or if the wiring or coax cable has been disturbed.

B. Post-Installation Testing

1) Test the ELT installation in accordance with the requirements of Installed Transmitter Test on page 38.

   NOTE: It is very important the cockpit remote switch LED immediately begins flashing continuously upon ELT activation. If the light fails to start flashing, recheck the interface wiring and connections between the ELT and the cockpit remote switch.

2) Comply with the GPS/FMC manufacturer's written post-installation checkout instructions and verify connection to the C406-N Series ELT has not caused any degradation in GPS/FMC performance.

   NOTE: For all "live" RF testing of the 406 MHz message output, only the "test message" transmitted at ELT turn-off is required to verify C406-N functions. See Digital Message Verification on page 36.

C. Installation Documentation

3) Make appropriate logbook (i.e., aircraft records) entries and submit FAA Form 337, along with any supporting data required by the FAA for approval of the installation, as applicable.

   NOTE: Refer to Regulatory Requirements and Guidelines on page 46 for additional information on installation approvals.

4) In countries other than the United States, make appropriate aircraft records entries and submit documentation as required for installation approval in accordance with national regulatory authorities.

8. Battery Pack Installation

A. Battery Reinstallation

CAUTION: THE BATTERY PACK CONTAINS ELECTROSTATIC DISCHARGE SENSITIVE (ESD) COMPONENTS AND, AS SUCH, IT MUST BE HANDLED WITH CARE. IF POSSIBLE, WEAR A GROUNDED WRIST STRAP WHEN HANDLING THE BATTERY PACK DURING INSTALLATION ACTIVITIES. TAKE PARTICULAR CARE TO AVOID TOUCHING THE EXPOSED CIRCUIT BOARD AND CONNECTOR PINS ON THE BOARD.

This subtask applies to reinstallation of an existing battery that was removed for inspection and testing.

1) See Figure 25 Battery Pack Installation for exploded view of the ELT and battery pack.

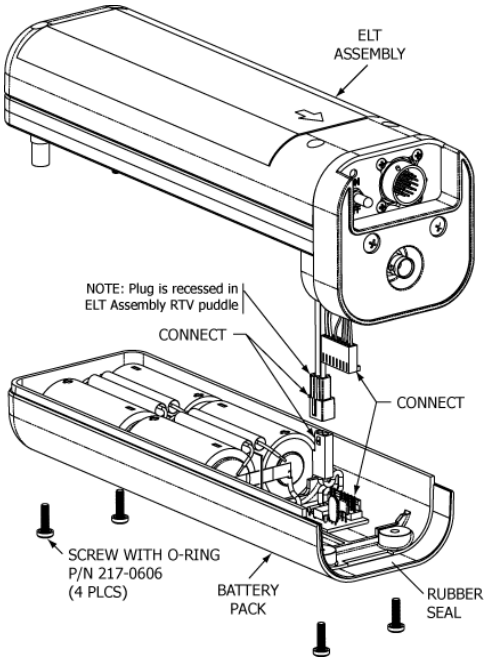

Figure 25 Battery Pack Installation

2) Apply a thin coating of non-petroleum based silicone grease, such as GE G-635, to the rubber seal to facilitate installation and allow the ELT and battery pack to slide together without binding on the rubber seal.

NOTE: Inspect gasket for wear and tear, or damage prior to installation.

3) Lay the battery pack and ELT on their sides, such that the two components are aligned, but separated enough to allow the electrical connections to be made.
4) Connect the ELT lead 8-pin connector to the header on the battery pack circuit board.
5) Connect the power harness 2-pin connector to the recessed connector inside the ELT body.
6) Reset the ELT by toggling the ELT local control switch to "ON" and back to "OFF" after 1-2 seconds.

NOTE: This step is necessary because the ELT will occasionally activate when power is connected to it in Step 6.

7) Fit the battery pack into place on the ELT, while dressing the wires away from the standoffs to avoid pinching the wires between the standoffs and battery pack.
8) Turn the battery pack bottom face up to facilitate installing the screws, while securely holding the ELT and battery pack together.

NOTE: **For a proper seal, ensure the battery pack is flush in the channel. Verify that all four (4) screws and their integrated O-rings are present and in good condition before proceeding to Step 9.**

If a screw or O-ring is missing or damaged, replace it with P/N 217-0606 or equivalent (SS 6-32 x 1/2" Sealing Phillips Pan Head Screw with Silicone O-Ring).

9) Install the four battery pack retaining screws about half way (i.e., leave them loose).
10) Tighten and torque the screws as shown in Figure 26 Battery Pack Screw Tightening Pattern. Torque to 6-8 lb-in (68-90 N•cm).

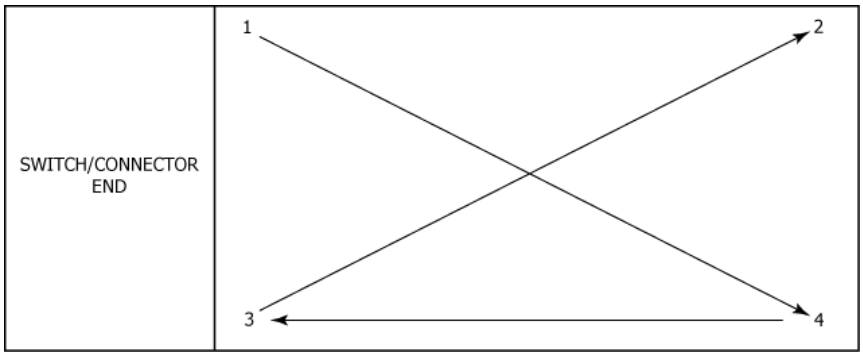

Figure 26 Battery Pack Screw Tightening Pattern

11) Perform an ELT self-test as follows:
    a) Set the ELT local control switch in the "ON" position. The LED will begin flashing every 3-4 seconds.
    b) Return the switch to the "OFF" position after 1-2 seconds. If the ELT is working properly, the LED will stay on for approximately 1 second and then flash the following expected error codes, which should be ignored.
        1. 1-flash and 3-flash errors, which are generated because the ELT is not installed and connected to the antenna, etc.
        2. A 5-flash error will be indicated if the ELT is programed with a location protocol, and is generated because the ELT is not connected to the navigation system and receiving position data.
    c) If a 7-flash error code is indicated, there is a problem with the battery or battery connection wiring. Refer to Table 6 on page 41.

B. New Battery Installation

CAUTION: DO NOT USE CONTACT CLEANER ON ELT COMPONENTS. SUCH CHEMICAL AGENTS CAN BE HIGHLY DESTRUCTIVE TO THE MOUNTING HARDWARE AND ELT HOUSING, CAUSING CRACKING, FRACTURING AND OTHER DAMAGE.

1) This subtask applies to installation of a new (i.e., replacement) battery.

2) Verify the bottom of the ELT is clean and free of battery corrosion residue. Clean as necessary.

   NOTE: Remove the paper backing from the rubber seal at the connector end of the battery pack, if present.

3) Perform the procedure outlined in Battery Installation on page 67.
4) Place a new battery expiration date label on the ELT mounting frame cap or other visible location.

   NOTE: The new label is supplied with the new battery pack.

5) Enter the pertinent battery replacement information in the logbook (i.e., aircraft records) and fill out any other required documentation.

9. Helicopter Installations - Special Considerations

A. Background

1) There are few guidelines, aside from experience, regarding the best way to mount an ELT in helicopters.
2) Before the availability of multi-axis G-switch modules, manufacturers advised installing ELTs with the sensitive axis pointing approximately 45° downward from the normal forward direction of flight.
   a) This mounting attitude was adapted due to a combination of the directional sensing limitations of a single-axis G-switch and the flight characteristics of helicopters.
   b) Mounting the ELT at this attitude and orientation is currently specified by CAR, Part 5, and Subpart 551.104.
   c) Experience has indicated this mounting angle tends to preload the G-switch and "nuisance" activation can occur as a result of severe aircraft maneuvers, and abrupt takeoffs and landings.
3) ACR Electronics, Inc. does not recommend installing ELTs designed with a single-axis G-switch in helicopters due the limitations and issues cited above.

B. Recommendations

1) ACR Electronics, Inc. recommends installation of the C406-N HM ELT in helicopters. The C406-N HM ELT is equipped with a 5-axis G-switch module in addition to the usual primary G-switch, which is oriented to the direction of flight. See Figure 27 ELT Orthogonal Axes.

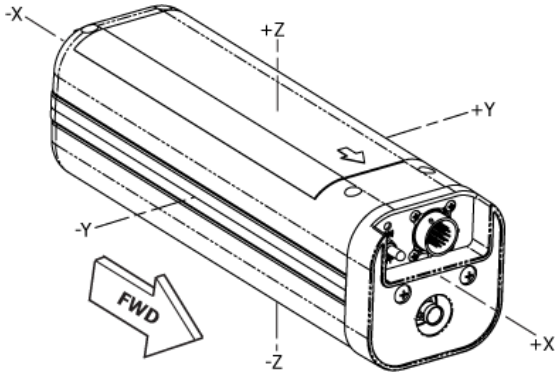

Figure 27 ELT Orthogonal Axes

2) The six-axis coverage of the C406-N HM design accommodates the flight characteristics of helicopters, while allowing "normal" installation and eliminating or significantly reducing "nuisance" ELT activations.

C. Orientation

1) Mount the C406-N HM ELT parallel to the waterline of the fuselage, along the longitudinal axis, with the direction-of-flight arrow on the ELT pointing forward. See Figure 28 Orientation of ELT for Helicopter Installations.

   NOTE: This is the orientation of the primary G-switch in the ELT.

2) The ELT may be angled downward as much as 25°, if necessary.

   NOTE: Keep in mind, the steeper the mounting angle, the more pre-load on the primary G-switch and the increased likelihood of "nuisance" activations.

3) All other installation requirements contained herein are applicable and must be adhered to.

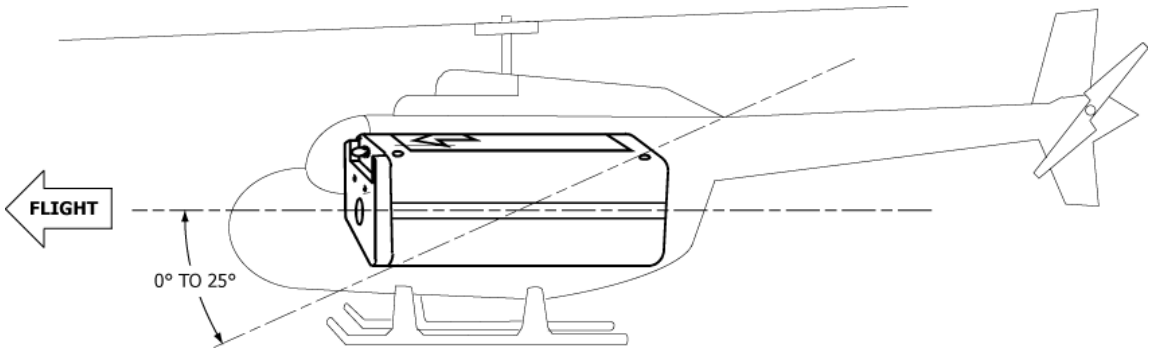

Figure 28 Orientation of ELT for Helicopter Installations

APPENDIX A – ELT REGISTRATION

1. Background Information

A. Hex ID Code

1) Each 406 MHz ELT is programmed with a unique hex ID code (i.e., registration code) that is transmitted to the SAR satellite system. At a minimum, this code provides information regarding:
   a) Unique aircraft or ELT identification
   b) Country of origin
   c) Latitude and longitude position data, when connected to aircraft navigation system.

B. Reason for Registration

1) ELT registration aids the Rescue Coordination Center (RCC) in determining if an actual emergency exists by accessing a database containing the registration information, which facilitates inquiries as to the whereabouts of the aircraft, existence of a flight plan, etc.
   a) Owner's name
   b) Address
   c) Telephone number
   d) Aircraft type and registration number

C. Registration Information Resources

1) Refer to COSPAS-SARSAT documents G.005 and S.007 for information regarding ELT programming and registration. These documents are available at www.cospas-sarsat.org.

2. Registration

A. Responsibility

1) It is the responsibility of the aircraft owner to register the ELT.
   a) If an ELT is moved to a different aircraft (i.e., an aircraft other than the one it was originally installed on), and/or the aircraft is registered in a new country, the ELT must be re-registered.
   b) If the aircraft is registered in a new country, the ELT must be re-registered.
   c) The product label must be re-marked with the new HEX ID code to indicate new programming, if applicable.

B. Required Information

1) The following information is required when registering an ELT:
   a) The unique Hex ID code printed on the ELT product label
   b) The information listed in Registration Information Resources on page 70.
2) The information (i.e., address, telephone number, etc.), filed as part of the registration process, should be kept up to date.

C. Where to Register

1) In the United States, the National Oceanic and Atmospheric Administration (NOAA) is the registration agency.
2) Specific registration web sites and information may be found at:
   a) The Artex products web site at www.acrartex.com, which has links to online registration sites and also a link to registration forms and instructions for a number of countries.
   b) An ELT may also be registered in the United States by going directly to the NOAA ELT registration web site at www.beaconregistration.noaa.gov.

NOTE: NOAA may also be contacted by mail at:

US MAIL ONLY	**FEDEX OR UPS ONLY**
SARSAT Beacon Registration	SARSAT Beacon Registration
NSOF, E/SPO53	NSOF, E/SPO53
1315 East West Highway	4231 Suitland Road
Silver Spring, MD 20910-9684	Suitland, MD 20746-4304

or by phone at 1-888-212-7283 or 301-817-4565.

3) In other countries, the national civil aviation authority in the applicable country should be contacted to obtain registration information.

APPENDIX B – PROGRAMMING ADAPTER OPTION

1. Description and Operation

A. Purpose

1) The Programming Adapter (PA) is a C406-N Series ELT option that provides the means to reprogram the ELT automatically every time the PA determines a new ELT with different programming has been placed in an aircraft.
2) This capability facilitates swapping ELTs from one aircraft to another when performing routine maintenance, etc., without losing a significant amount of time reprogramming ELTs.

B. Physical Description

1) The PA is housed in a back shell extension designed for use with the remote switch harness 22-position plug that mates with the ELT.
1) The PA circuitry is encapsulated in the back shell extension and has six wires, with pre-installed contact sockets, that exit the rear of the PA. See Figure 29 Programming Adapter.
2) A wire path through the back shell allows passage of the remote switch wires and other wires associated with ELT installation.

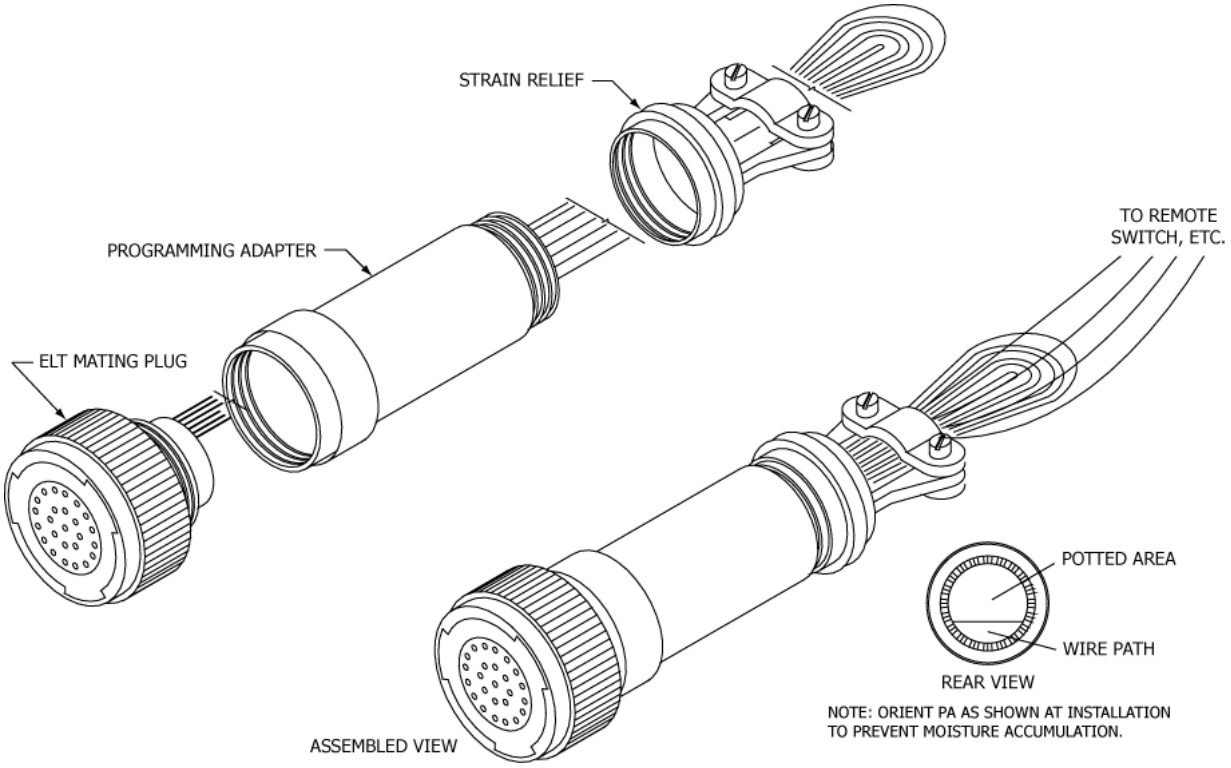

Figure 29 Programming Adapter

C. PA Programming

<u>CAUTION</u>: THE PROGRAMMING AND LABELING OF THE ELT MUST MATCH THE AIRCRAFT IN WHICH IT IS INSTALLED. REMARK THE ELT PRODUCT LABEL AS NECESSARY TO REFLECT NEW PROGRAMMING AND/OR COUNTRY OF REGISTRY. CONTACT THE LOCAL REGULATORY AUTHORITIES RESPONSIBLE FOR ELT REGISTRATION. SEE APPENDIX A – ELT REGISTRATION ON PAGE 70.

1) The PA may be programmed with any aircraft ID [i.e., 24-bit address or registration number (tail number)].
2) The 453-5078 PA is available from ACR Electronics, Inc. pre-programmed with an aircraft ID.
3) An alternative version of the PA (453-5068) is available unprogrammed (blank).
4) Either version of the PA can be programmed in the field. Contact ACR Electronics, Inc. for the hardware and software required to program the PA.

D. Operation

1) PA operation is automatic.
2) The ELT is reprogrammed with aircraft ID information when +28 VDC aircraft power is applied to the ELT.

2. Installation and Test

A. Wiring

1) Coordinate installation of the PA with installation of the remote switch harness ELT plug. Refer to ELT 22-Pin Plug Installation on page 60.
2) If the PA is undergoing installation on an aircraft with an existing ELT and remote switch harness, perform the following procedure, otherwise proceed to Step (3):
   a) Loosen the strain relief clamp and unscrew the strain relief from the plug body.
   b) Remove the wiring from the ELT mating plug by extracting the contact sockets using extraction tool MS27495R22MS, or equivalent.
   c) Remove the jumper from Pin 3 and Pin 4.
   d) Remove the sealing grommet plugs and empty contact sockets from Pin locations 1, 2, 15, and 16.
3) Loop the PA wires back through the wire path such that they exit at the front of the PA. See Figure 29 Programming Adapter on page 72.
4) Terminate the contact sockets of the six PA wires in the remote switch harness ELT plug using insertion tool MS27495A22MS, or equivalent. See Figure 30 Programming Adapter Interface Wiring Diagram.

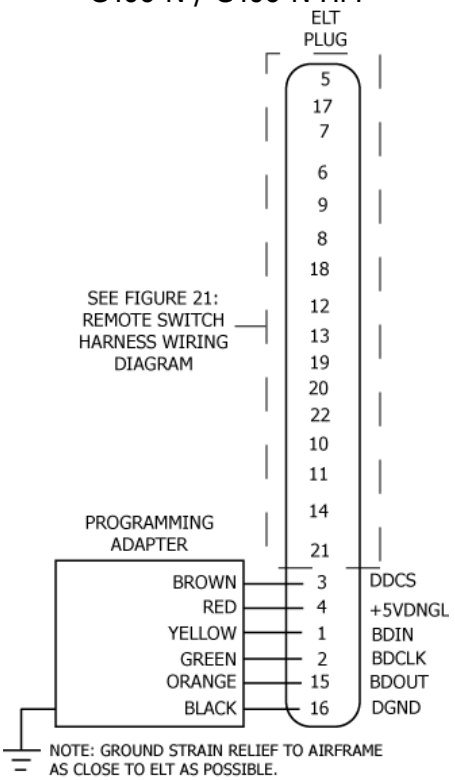

Figure 30 Programming Adapter Interface Wiring Diagram

5) Feed the remote switch harness wires and other wires associated with the ELT installation through the strain relief.

   NOTE: Slide heat shrink tubing of suitable size over the wires, if desired. The diameter of the tubing must be large enough to accommodate the PA wire loop that extends back beyond the strain relief clamp.

6) Feed the remote switch harness wires and other wires associated with the ELT installation through the PA wire path.
7) Terminate the remote switch harness wires and other wires associated with the ELT installation in ELT plug in accordance with ELT 22-Pin Plug Installation on page 60.

B. Assembly

CAUTION: ORIENT THE PA BODY TO THE PLUG SUCH THAT THE WIRE PATH IS AT THE BOTTOM. THIS ORIENTATION PREVENTS MOISTURE BUILDUP IN THE PA AND AROUND THE BACK OF THE PLUG.

1) Screw the PA body (i.e., back shell extension) onto the ELT plug, taking care not to twist the wires while rotating the back shell extension coupling. See Figure 29 Programming Adapter on page 72 for PA body orientation.

   NOTE: Apply finger pressure in the center of the ELT plug face to prevent it from rotating and twisting the wires while tightening the coupling.

2) Shrink the heat shrink tubing, if installed.
3) Screw the strain relief onto the back shell extension.
4) Tighten the strain relief clamp.
5) Verify the strain relief is grounded to the airframe in accordance with Airframe Ground Connections on page 62.

C. Installation

1) See Figure 31 Programming Adapter Installation.
2) Install the PA assembly on the ELT in the same manner that the remote switch harness ELT plug is normally coupled to the ELT receptacle. See Installation (ELT) on page 64.

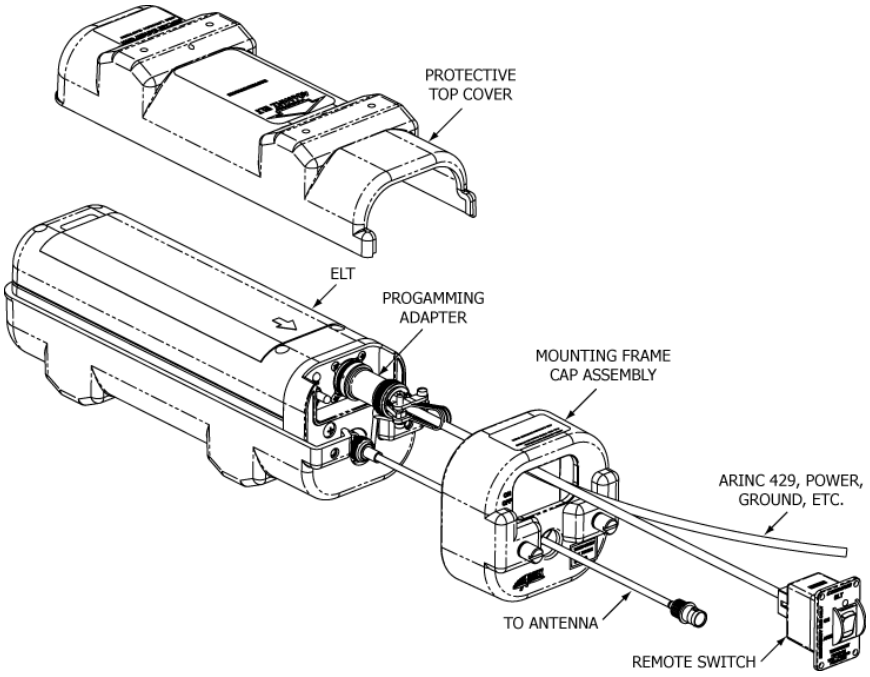

Figure 31 Programming Adapter Installation

D. Aircraft ID Verification Test

1) Apply +28 VDC power to the ELT. The ELT is not activated, only the +28 VDC power source for the ELT is active, which initiates ELT reprogramming. Refer to Table 6 on page 41 if a long/short 2-flash error code is displayed on the ELT status LED when power is applied.
2) Disconnect the antenna coax cable at the ELT.
3) Read the ELT message following the instructions in Digital Message Verification on page 36.
4) Re-register the ELT, if necessary, in accordance with the instructions in Appendix A – ELT Registration on page 70.
5) Re-mark the ELT product label with the new hex ID code and country of registry, as applicable. See Appendix A – ELT Registration on page 70.

APPENDIX C – REMOTE SWITCH CONTROL PANEL OPTION

1. Description and Operation

A. Purpose

1) The G737 control panel (453-0161) is an optional replacement for the standard 345-6196-04 cockpit remote switch.
2) This panel is principally for use in Boeing aircraft, which are pre-wired for this type of ELT control panel. However, this appendix does provide wiring instructions for aircraft that are not provisioned for this type of panel.
3) These instructions include installation of a buzzer modified for use with the Boeing configuration. In addition, instructions and a wiring diagram are provided for installing the standard buzzer with the remote switch control panel. The difference between the two buzzer options is the means by which the buzzer is activated and controlled.
   a) The modified buzzer is activated by the "ELT ON" circuit and powered by the aircraft battery.
   b) The standard buzzer is controlled and powered by the ELT.

B. Control Panel Description

1) The control panel is backlit panel comprised of an ELT status indicator light and a control switch, which allows an operator to manually activate the ELT for testing and reset (i.e., deactivate) the ELT. See Figure 32 Remote Switch Control Panel Assembly.

NOTE: The ELT CANNOT be disarmed or disabled from the cockpit. Cockpit operation is limited to deactivating the ELT (i.e., reset) or manually activating the ELT.

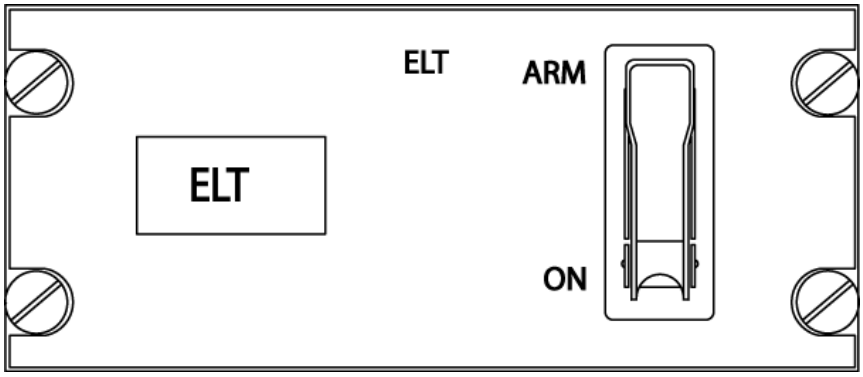

Figure 32 Remote Switch Control Panel Assembly

C. Modified Buzzer Description

1) A buzzer (130-4005), modified for compatibility with Boeing ELT provisions, provides an audible alert when the ELT is active. The buzzer is similar in appearance with the 130-4004 buzzer. See Figure 4 Buzzer on page 22.
2) This buzzer is used in lieu of the 130-4004 buzzer used with the standard remote switch installation.

D. Operation

1) The remote switch control panel switch operates and controls the ELT in the same manner as the standard remote switch. See the operating procedures contained in Operational Overview on page 24.
2) The indicator light on the panel illuminates and stays on steady when the ELT is activated, unlike the standard remote switch LED, which flashes when the ELT is active.

2. Remote Switch Control Panel Installation

A. Location

1) The control panel must be mounted in the cockpit where the pilot can easily reach the switch and see the status light.

NOTE: In most cases, panel space and wiring have been pre-provisioned by the aircraft manufacturer for the control panel; however, location and installation requirements are defined for installations in aircraft not pre-provisioned for this control panel.

2) The panel assembly requires a space approximately 5.74 x 2.24 in. (146 x 57 mm) on the panel or console surface, with a depth of 3.00 in. (77 mm), excluding room for the harness connection. See Figure 33 Cockpit Remote Switch Panel Outline and Dimensions.

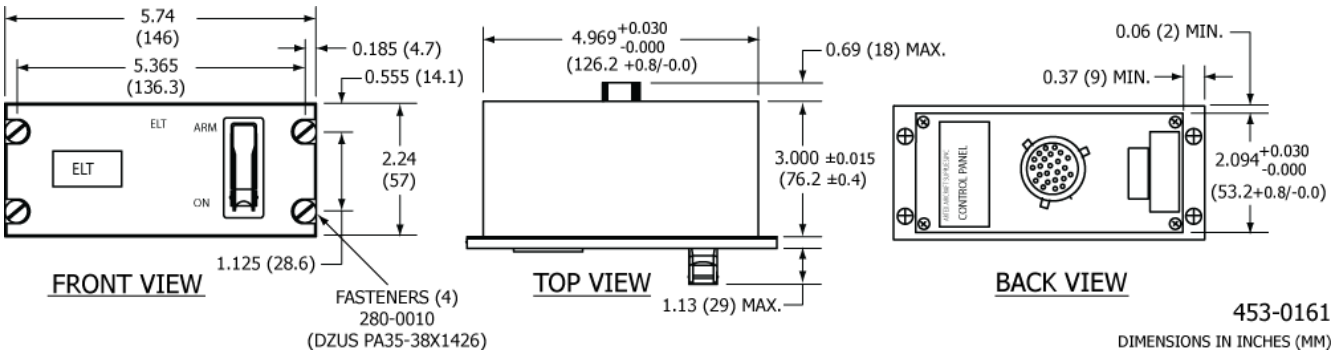

Figure 33 Cockpit Remote Switch Panel Outline and Dimensions

B. Installation

1) Provide an opening in the instrument panel or other mounting location which meets the dimensional requirements shown in Figure 33 Cockpit Remote Switch Panel Outline and Dimensions on page 77.
2) Mount Dzus rails on the sides of the opening, if necessary. See Figure 33 Cockpit Remote Switch Panel Outline and Dimensions on page 77 for rail center line dimensions.
3) Install the remote switch panel assembly.

NOTE: Step (3) may be completed after wiring is completed on the ELT end and the harness plug has been plugged into the panel assembly, in accordance with the requirements of Remote Switch Control Panel Final Installation on page 82. If such is the case, perform a fit check at this time.

4) Apply a "For Aviation Emergency Use Only/Unauthorized Use Prohibited" placard as close to the switch as practical, if required.

NOTE: This placard is recommended for installations on aircraft that are not pre-placarded for remote ELT control. If desired, the placard (591-0428) may be ordered from ACR Electronics, Inc..

3. Modified Buzzer Installation

A. Location

CAUTION: PLACING THE BUZZER IN THE COCKPIT IS NOT RECOMMENDED DUE TO THE POTENTIAL FOR DISTRACTION. THE BUZZER PRODUCES A LOUD, SIREN-TYPE SOUND WHEN THE ELT IS ACTIVATED. SINCE THE BUZZER OPERATES IN TANDEM WITH THE COCKPIT LED, IT WOULD ONLY SERVE AS A REDUNDANT WARNING INDICATOR IN THE COCKPIT.

1) Select a suitable location for the buzzer.

NOTE: The buzzer may be located anywhere in the aircraft; however, the recommended location is near the ELT, as the buzzer is loud enough to be heard outside the aircraft when the engine(s) is not running. When the engine(s) is running, the LED on the cockpit remote switch panel will warn the pilot the ELT is active.

B. Installation

1) Fabricate a bracket suitable for supporting the buzzer. See Figure 34 Modified Buzzer Outline and Dimensions.

NOTE: Refer to the aircraft manufacturer's written instructions or AC 43.13-2, as applicable, for approved bracket fabrication and installation methods.

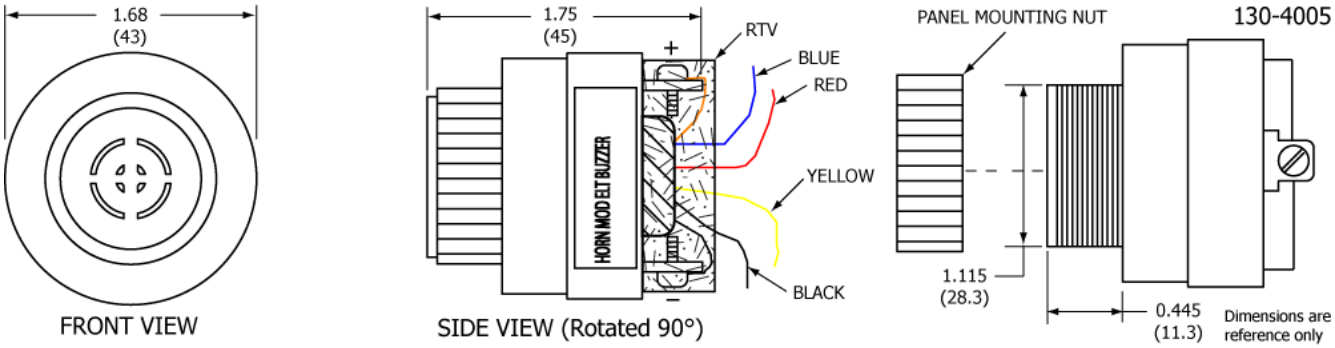

Figure 34 Modified Buzzer Outline and Dimensions

2) Attach the bracket to the airframe such that the buzzer is adequately supported and does not show any significant evidence of distorting the airframe skin.
3) Install the buzzer in the bracket.
   a) Remove the panel mounting nut and insert the buzzer in the bracket.
   b) Install the panel mounting nut and tighten it securely.

4. Wiring and Test

A. Remote Switch Control Panel Wiring Fabrication

1) In most cases, Boeing aircraft have been provisioned with wiring for connecting the ELT to the control panel. Install a remote switch control panel harness in accordance with the following instructions ONLY if wiring has not been provided and/or spare wires are not available.

   NOTE: Terminate the wiring in accordance with Figure 35 Remote Switch Control Panel Wiring Diagram (130-4005 Modified Buzzer) on page 80 and the procedures herein.

2) Fabricate a 4-wire harness long enough to reach from the ELT to the remote switch control panel, allowing enough slack to provide a drip loop at the ELT end and a service loop at the remote switch panel end.

   NOTE: A 5 or 6-wire harness may be necessary if a ground wire is connected between ELT Pin 11 and remote switch panel Pin 9; and/or ELT Pin 2 must be connected to remote switch panel Pin 8 if a horn is not installed. See Figure 35 Remote Switch Control Panel Wiring Diagram (130-4005 Modified Buzzer) on page 80.

   a) Strip approximately 0.15 in. (3 mm) of insulation from the ends of each of the harness wires.
   b) Dress and tin the bare wires to prevent the strands from fraying during terminal crimping operations.

3) Fabricate the additional wires needed to connect the remote switch panel; referring to Figure 35 Remote Switch Control Panel Wiring Diagram (130-4005 Modified Buzzer) on page 80 and the specific aircraft wiring diagrams to determine appropriate connection points.

   a) Pin 3 to the selected +28V aircraft power source.
   b) Pin 4 to the selected +28V/+16V aircraft power source.
   c) Pin 6 to the Master Caution +17V circuit.
   d) Pin 8 to the BLUE wire on the buzzer (i.e., horn).
   e) Pin 9 to aircraft ground.
   f) Pin 10 to the Master Caution Pulse circuit.
   g) Pin 11 to the Master Caution Steady State circuit.
   h) Pin 12 to the Master Lighting Test circuit.
   i) Pin 13 to the 5VAC Lighting circuit.
   j) Pin 14 to aircraft ground.
   k) Prepare the wires as described in Steps (2)(a) and (2)(b).

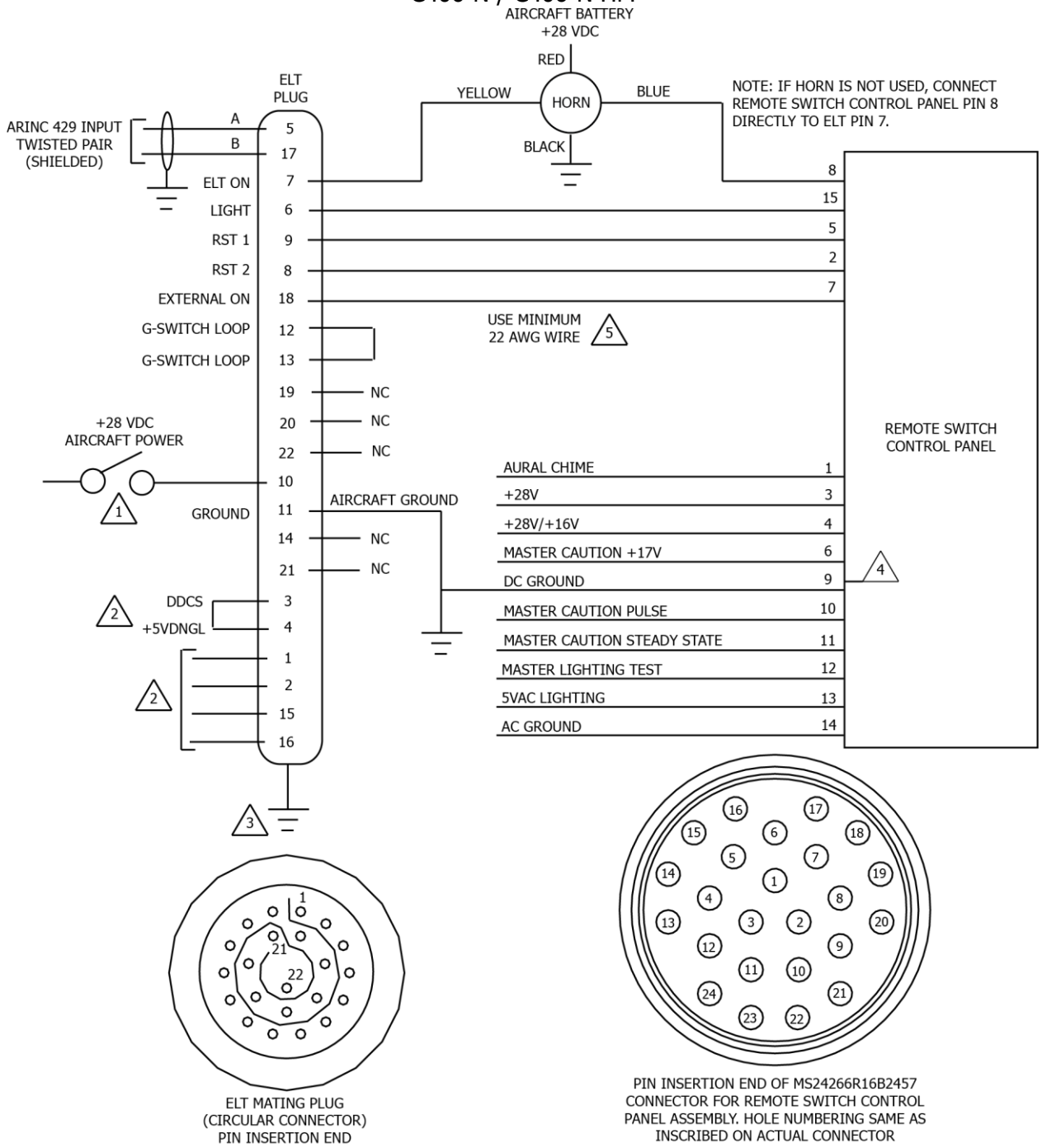

ELT MATING PLUG
(CIRCULAR CONNECTOR)
PIN INSERTION END

PIN INSERTION END OF MS24266R16B2457 CONNECTOR FOR REMOTE SWITCH CONTROL PANEL ASSEMBLY. HOLE NUMBERING SAME AS INSCRIBED ON ACTUAL CONNECTOR

1. SWITCHABLE POWER SOURCE WITH 1-AMP BREAKER OR SLO-BLO FUSE. MAXIMUM CURRENT DRAW IS 120 mA.
2. PINS 3 AND 4 MUST BE JUMPERED UNLESS OPTIONAL PROGRAMMING ADAPTER (PA) IS INSTALLED. SEE APPENDIX B FOR PA INSTALLATION DETAILS (PINS 1, 2, 3, 4, 15, AND 16).
3. CONNECT STRAIN RELIEF TO AIRCRAFT GROUND AS CLOSE TO ELT AS POSSIBLE.
4. ENSURE ALL GROUNDS ARE COMMON. IF AIRCRAFT GROUND INTEGRITY BETWEEN THE ELT AND REMOTE SWITCH PANEL CANNOT BE GUARANTEED, REMOTE SWITCH PANEL PIN 9 TO ELT PIN 11 (OR GROUND POINT COMMON TO ELT PIN 11 AS CLOSE TO ELT AS POSSIBLE). OTHERWISE, THE CONNECTION BETWEEN PIN 9 AND PIN 11 IS OPTIONAL.
5. USE OF SHIELDED CABLE IS RECOMMENDED, PARTICULARLY FOR LONG CABLE RUNS AND WHERE EMI IS A CONCERN.

Figure 35 Remote Switch Control Panel Wiring Diagram (130-4005 Modified Buzzer)

B. Modified Buzzer Wiring Fabrication

1) Fabricate the following wires, which correspond with the wires on the buzzer:

NOTE: Use appropriately coded wires, such that the wires can be identified and terminated at the appropriate locations.

a) YELLOW wire to harness ELT receptacle.
b) BLACK wire to aircraft ground.
c) RED wire to +28 VDC aircraft battery power source.
d) BLUE wire to Pin 8 of the remote switch panel connector.
e) Strip approximately 0.15 in. (3 mm) of insulation from the ends of each of the harness wires.
f) Dress and tin the bare wires to prevent the strands from fraying during terminal crimping operations.

C. Remote Switch Control Panel Wiring Installation

1) Terminate the remote switch control panel end of all wires in an MS24266R16B24S7 connector in accordance with the aircraft manufacturer's written instructions or AC43.13-1, as applicable. See Figure 35 Remote Switch Control Panel Wiring Diagram (130-4005 Modified Buzzer) on page 80.

NOTE: Identify the wires and connector pin relationships, such that the wiring can be terminated at the appropriate locations at the ELT mating plug.

2) Install the remote switch control panel harness as follows:
   a) Bundle the wiring into a complete harness, with breakouts as appropriate, such that the wiring can be properly supported and attached to the airframe. Refer to the aircraft manufacturer's written instructions or AC 43.13-1, Chapter 11, § 9 through 12, as applicable.
   b) Route the wire bundle through the airframe.
   c) Support the wire bundle by clamping or other suitable means, such that the wiring is properly supported and protected from chaffing and strain. Refer to the aircraft manufacturer's written instructions or as described in AC 43.13-1, Chapter 11, § 9 through 12, as applicable.
3) Terminate the aircraft side of the wires fabricated in Step (3) at the appropriate connection points in accordance with the aircraft manufacturer's written instructions or AC 43.13-1, as applicable. See Figure 35 Remote Switch Control Panel Wiring Diagram (130-4005 Modified Buzzer) on page 80 and aircraft wiring diagrams.
4) Refer to Wiring on page 56 for applicable subtask instructions at the ELT end of the remote switch control panel harness and other wiring and connection requirements related to the ELT installation.

D. Modified Buzzer Wiring Installation

1) Splice the wires fabricated in Modified Buzzer Wiring Fabrication on page 81 to the buzzer wires in a manner acceptable to the aircraft manufacturer, or as described in AC 43.13-1, Paragraph 11-167, as applicable.
2) Route the buzzer wiring through the airframe.
3) Support the wiring by clamping or other suitable means, such that the wiring is properly supported and protected from chaffing and strain. Refer to the aircraft manufacturer's written instructions or as described in AC 43.13-1, Chapter 11, § 9 through 12, as applicable.
4) Terminate the buzzer wires in accordance with Figure 35 Remote Switch Control Panel Wiring Diagram (130-4005 Modified Buzzer) on page 80 as follows:
   a) BLUE wire to remote switch control panel connector Pin 8. Coordinate with Remote Switch Control Panel Wiring Installation Step (1) on page 79.
   b) YELLOW wire to ELT mating plug Pin 7. Coordinate with Modified Buzzer Wiring Fabrication on page 81.
   c) RED wire to the +28 VDC aircraft battery power source.
   d) BLACK wire to aircraft ground. See Airframe Ground Connections on page 62.

E. Standard Buzzer Installation

See Figure 36 Remote Switch Control Panel Wiring Diagram (130-4004 Buzzer) on page 83.

1) Terminate the buzzer wires in the remote switch harness ELT plug in accordance with Modified Buzzer Wiring Fabrication on page 81.
2) Install the buzzer in accordance with Modified Buzzer Wiring Fabrication on page 81.
3) Terminate the buzzer wires to the buzzer in accordance with Airframe Ground Connections on page 62.

F. Remote Switch Control Panel Final Installation

1) Connect the remote switch control panel harness plug the remote switch control panel.
2) Install the remote switch control panel assembly, referring to Modified Buzzer Wiring Fabrication on page 81.

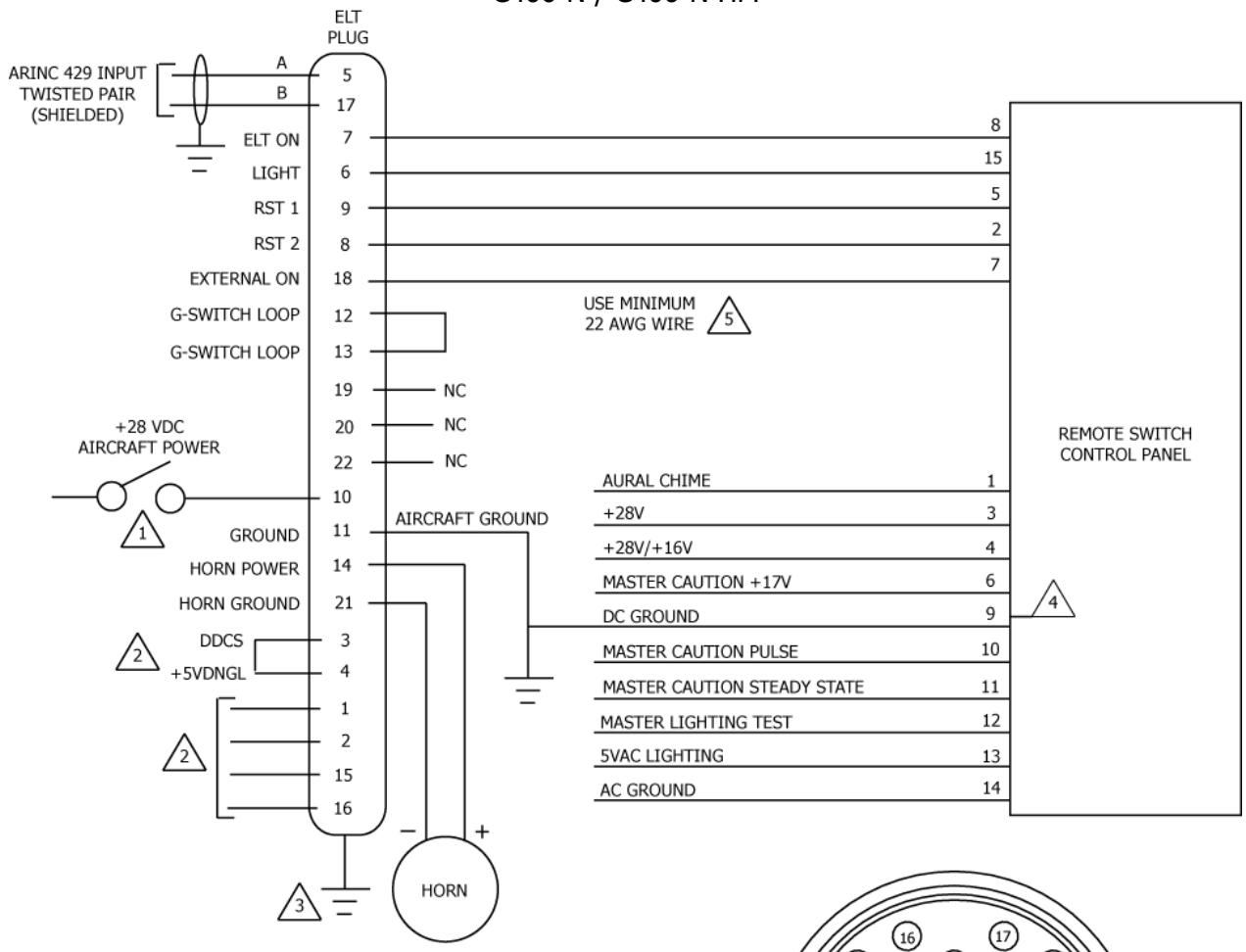

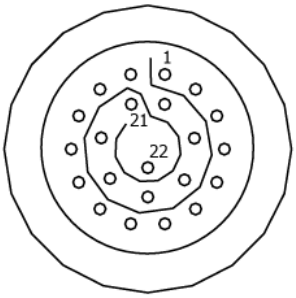

ELT MATING PLUG
(CIRCULAR CONNECTOR)
PIN INSERTION END

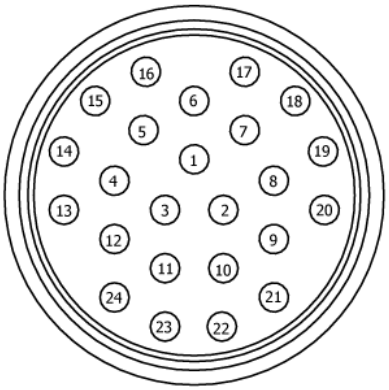

PIN INSERTION END OF MS24266R16B2457 CONNECTOR FOR REMOTE SWITCH CONTROL PANEL ASSEMBLY. HOLE NUMBERING SAME AS INSCRIBED ON ACTUAL CONNECTOR

1. SWITCHABLE POWER SOURCE WITH 1-AMP BREAKER OR SLO-BLO FUSE. MAXIMUM CURRENT DRAW IS 120 mA.
2. PINS 3 AND 4 MUST BE JUMPERED UNLESS OPTIONAL PROGRAMMING ADAPTER (PA) IS INSTALLED. SEE APPENDIX B FOR PA INSTALLATION DETAILS (PINS 1, 2, 3, 4, 15, AND 16).
3. CONNECT STRAIN RELIEF TO AIRCRAFT GROUND AS CLOSE TO ELT AS POSSIBLE.
4. ENSURE ALL GROUNDS ARE COMMON. IF AIRCRAFT GROUND INTEGRITY BETWEEN THE ELT AND REMOTE SWITCH PANEL CANNOT BE GUARANTEED, REMOTE SWITCH PANEL PIN 9 TO ELT PIN 11 (OR GROUND POINT COMMON TO ELT PIN 11 AS CLOSE TO ELT AS POSSIBLE). OTHERWISE, THE CONNECTION BETWEEN PIN 9 AND PIN 11 IS OPTIONAL.
5. USE OF SHIELDED CABLE IS RECOMMENDED, PARTICULARLY FOR LONG CABLE RUNS AND WHERE EMI IS A CONCERN.

Figure 36 Remote Switch Control Panel Wiring Diagram (130-4004 Buzzer)

G. Remote Switch Control Panel Functional Test

1) Coordinate functional testing of the remote switch control panel with the post-installation ELT testing requirements in Aircraft ID Verification Test on page 75.
2) Place the remote switch in the "ON" position.
3) Verify the cockpit remote switch panel light illuminates immediately. If the light fails to illuminate immediately and stay on steady, recheck the interface wiring and connections between the ELT and the remote switch control panel.
4) Place the remote switch in the "ARM" position.
5) Verify the ELT deactivates.

ILLUSTRATED PARTS LIST

1. Introduction

A. Purpose

1) This illustrated parts list (IPL) illustrates and lists the spare parts, with attaching hardware, applicable to the C406-N Series ELT.
2) Parts and components not listed herein, are not field replaceable and ELT repairs requiring parts outside the scope of this manual must be accomplished by the manufacturer.

B. IPL Usage Guide

1) If the part number is not known:
   a) Find the part in the IPL Figure illustration.
   b) Note the item number assigned to the part.
   c) Refer to the associated parts list and find the item number in the "Fig # & Item" column.
2) If the part number is known:
   a) Refer to the parts list and find the part in the "Part #" column.
   b) Note the figure number and item number assigned to the part.
   c) Refer to the illustration in the applicable IPL figure to find attaching hardware and related assembly parts.
3) In cases where multiple item numbers are shown on an illustration for the same item, there is more than one part number option associated with that item.

2. Manufacturer Name and Address

A. Ordering Information

1) Approved parts may be ordered from ACR Electronics, or any authorized dealer.

CONTACT INFORMATION

Sales, ACR Electronics, Inc. / Artex Products

5757 Ravenswood Rd

Fort Lauderdale, FL 33312-6645, USA

Phone: (954) 981-3333

Fax: (954) 983-5087

3. Explanation of Detailed Parts List Entries

A. Fig # & Item Column

1) The first number at the top of the column is the figure number of the corresponding illustration.
2) The right hand number is the item number in the associated figure.
3) A dash (–) in front of an item means the part is not illustrated.
4) Alpha-variants A through Z (except I and O) are assigned to item numbers, when necessary to identify added parts, alternate parts, and service bulletin modified parts.

B. Part # Column

1) This column contains the manufacturer's part number for each part.

C. Nomenclature Column

1) This column contains descriptive nomenclature for each part, service bulletin numbers affecting the part, and obsolete part numbers.
2) The indenture system used in the "Nomenclature" column indicates the relationship of one part to another, as follows:

1 2 3

End Item or Major Assembly

ATTACHING PARTS

Attaching Parts for End Item or Major Assembly

***

. Detail Parts for End Item or Major Assembly

. Subassemblies

ATTACHING PARTS

. Attaching Parts for Subassemblies

***

. . Detail Parts for Subassemblies

ATTACHING PARTS

. . Attaching Parts for Detail Parts

***

3) Assemblies, subassemblies, and detail parts subject to modification, deletion, addition, or replacement by an issued service bulletin, are annotated to indicate both pre- and post-service bulletin configurations. The term (PRE SB 2828) in the "Nomenclature" column designates the original configuration, and the term (POST SB 2828) identifies assemblies and parts after the modification has been completed.
4) The terms defined below are used when applicable to indicate the interchangeability of parts.

TERM	ABBREVIATION	DEFINITION
Alternate	ALT	The listed part is alternate to, and interchangeable with, other parts within the same item number variant group or other item numbers if designated.
Superseded By	SUPSD BY	The part is replaced by and is not interchangeable with the item number designated in the notation.
Supersedes	SUPSDS	The part replaces and is not interchangeable with the item number designated in the notation.
Replaced By	REPLD BY	The part is replaced by and is interchangeable with the item number designated in the notation.

Replaces	REPLS	The part replaces and is interchangeable with the item number designated in the notation.

D. UPA (Units Per Assembly) Column

1) The quantity shown in this column represents the units required for one next higher assembly or, when referring to attaching parts, the quantity to attach one such item.
2) The abbreviation RF (reference) indicates the end item assembly is listed for reference purposes.

4. Detailed Parts List

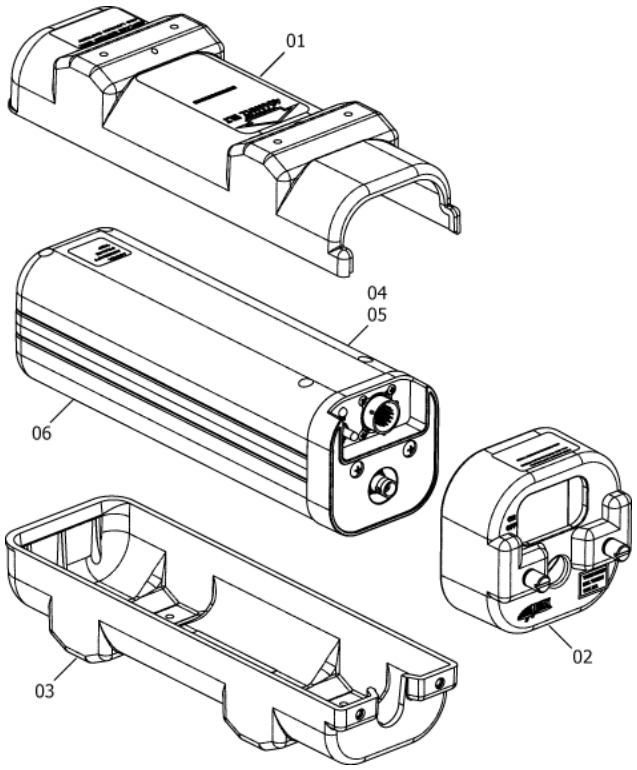

Figure 37 C406-N Series ELT Main Assembly and Installation

FIG #	ITEM	PART #	1234 NOMENCLATURE	UPA
Figure 37	01	452-3052	Protective Top Cover Assembly	1
	02	452-5066	Mounting Frame Cap Assembly	1
	03	452-5050	Mounting Tray Assembly	1
			ATTACHING PARTS	
	–	201-0810	Screw, PHP 8-32 x 5/8” SS	4
	–	246-0008	Washer, Flat 1/2” SS #8	4
	–	247-0800	Washer, Lock Internal Tooth SS #8	4
	–	241-0832	Nut, 8-32 x 1/4” Hex SS	4
			***	
	04	453-5060	C406-N Main Assembly	1
	05	453-5061	C406-N HM Main Assembly ALT	1

FIG #	ITEM	PART #	1234 NOMENCLATURE	UPA
			***	
	–	591-0999	. Label, Hex Code	1
	–	591-049-01	. Label, Country Code	1
			***	
	06	452-0133	. 406 Lithium Battery Pack	1
			ATTACHING PARTS	
	–	217-0606	. Screw, with O-Ring	4
			***	

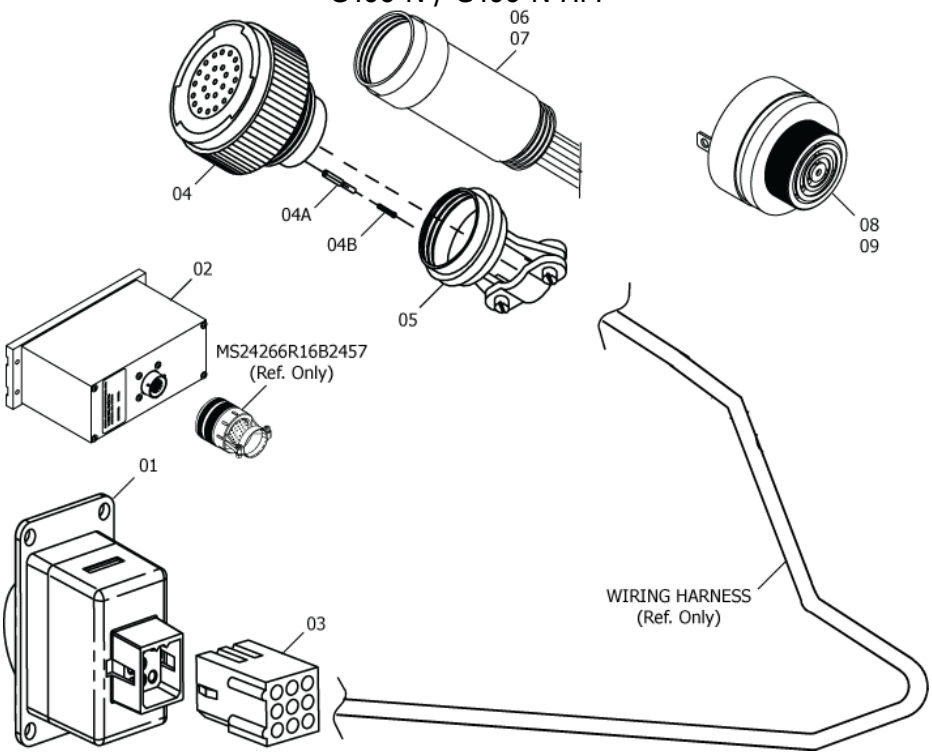

Figure 38 Electrical Components

FIG #	ITEM	PART #	1234 NOMENCLATURE	UPA
Figure 38	01	345-6196-04	Switch, Cockpit Remote	1
			ATTACHING PARTS	
	–	201-0408	Screw, PHP 4-40 x 1/4” SS	4
	–	247-0400	Washer, Internal Lock SS #4	4
	–	241-0440	Nut, 4-40 x 1/4” Hex SS	4
			***	
	02	453-0161	Control Panel, G737 (Optional)	1
			***	
	–	591-0428	. Label, ELT Cautionary Use Advisory	1
			***	
	03	151-5009	Plug, 9-Pin	1
			***	

FIG #	ITEM	PART #	1234 NOMENCLATURE	UPA
	–	151-6628	. Terminal, Crimp Female 0.062 Dia.	9
			***	
	04	150-5061	Connector, 22-Position, Plug, Shell Size 12	1
			***	
	04A	151-6657	. Contact, 22D Crimp Socket	22
	04B	151-6658	. Plug, Sealing Grommet	13
			***	
	05	151-5061	Strain Relief, Shell Size 12	1
			***	
	06	453-5078	. Programming Adapter (Programmed) (Optional)	1
	07	453-5068	. Programming Adapter (Blank) ALT	1
			***	
	08	130-4004	Buzzer (ELT Audible Alert)	1
	09	130-4005	Horn Mod ELT Buzzer (Optional - Use with Item 02)	1
			***	

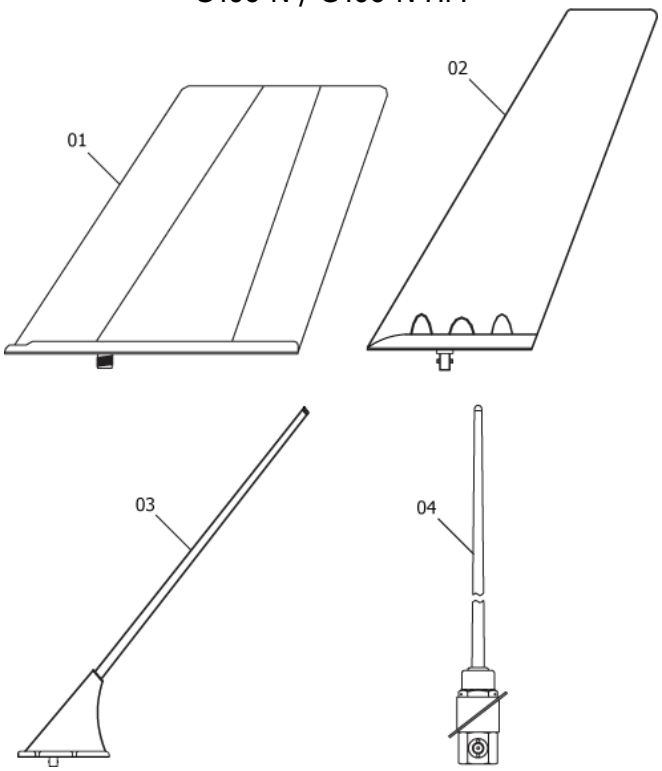

Figure 39 Antennas

FIG #	ITEM	PART #	1234 NOMENCLATURE	UPA
Figure 39	01	110-340	Antenna, Tri-Band CI319-1 (Single Input)	1
	02	110-341	Antenna, Tri-Band Blade 16-21 (Single Input)	1
	03	110-338	Antenna, Tri-Band CI319-1 (Single Input)	1
	04	110-343	Antenna, Tri-Band Whip 21-41	1
			***	
	–	611-6013-04	. Cable, Coax BNC to BNC (6 ft.)	1
			***	