ARTEX ELT 1000
Emergency Locator Transmitter

Description, Operation, Installation and Maintenance Manual
Y1-03-0259 Rev. AC

ATA Code #25-62-33

ARTEX PRODUCTS / ACR ELECTRONICS, INC.
5757 Ravenswood Rd, Ft. Lauderdale, FL 33312
www.acrartex.com

ARTEX PRODUCTS / ACR ELECTRONICS, INC.

DESCRIPTION, OPERATION, INSTALLATION AND MAINTENANCE MANUAL

ELT 1000 (P/N: A3-06-2749-1)

This manual includes data for the following equipment:

Component	Part No.
Emergency Locator Transmitter	A3-06-2749-1
2-Wire Remote Switch	A3-06-2759
5-Wire Remote Switch	455-6196
Install Kit, Mounting Tray	A3-06-2758-1
Antenna, Rod (white)	110-338
Antenna, Rod (black)	110-338-01
Antenna, Whip	110-773
Antenna, Blade	110-340
Antenna, Rod (white)	A3-06-2835
Cable, Coaxial, BNC to BNC, 6 ft.	611-6013-04
Cable, Coaxial, BNC to BNC, 12 ft.	611-6013-13
Battery Pack, LiSO2	452-6504-1
External Buzzer	452-6505

NOTICES

THE INFORMATION CONTAINED HEREIN IS NOT PROPRIETARY.

Information in this manual is subject to change without notice. ACR Electronics, Inc. makes no warranty, expressed or implied, with regard to this manual, including but not limited to any implied warranties of merchantability, fitness for a particular purpose, and non-infringement. In addition, ACR Electronics, Inc. makes no warranty with regard to the documentation or data contained herein. ACR Electronics, Inc. is not liable in the event of incidentals, special, consequential, or any other damages in connection with or arising from furnishing, performance, or use of this manual.

For further information contact Sales, ACR Electronics, Inc., 5757 Ravenswood Rd, Fort Lauderdale, FL 33312. Telephone (954) 981-3333.

AIRWORTHINESS LIMITATIONS

The Airworthiness limitations section is FAA approved and specifies inspections and other maintenance required under 14 CFR§ 43.16 and 91.403, unless an alternative program has been approved.

IMPORTANT NOTICE

ACR Electronics, Inc. will be responsible for full distribution and revisions of ICA's (Instructions for Continued Airworthiness). For inquiries regarding the content and currency of this manual, contact ACR Electronics, Inc., 5757 Ravenswood Rd, Fort Lauderdale, FL 33312. Telephone (954) 981-3333.

TABLE OF CONTENTS

TABLE OF CONTENTS 3

LIST OF ACRONYMS, ABBREVIATIONS AND DEFINITIONS 6

LIST OF FIGURES 8

RECORD OF REVISIONS 9

SERVICE BULLETIN LIST 10

LIST OF EFFECTIVE PAGES 11

INTRODUCTION 12
- 1. Manual Usage 12
  - A. General 12
  - B. Application 12
- 2. Model Description 13
  - A. ELT 1000 13
- 3. Approvals 13
  - A. ELT 13
  - B. Battery 13
  - C. RTCA DO-160G Compliance 14
- 4. Frequency Allocation 15
  - A. Application 15
  - B. Discussion 15
- 5. References 15
  - A. Regulatory Documents 15
  - B. Other Documents 16

DESCRIPTION AND OPERATION 17
- 1. Description 17
  - A. Functional Overview 17
  - B. System Components 18
- 2. Operation 20
  - A. Overview 20
  - B. Normal Operation 20
  - C. Manual Activation 20
  - D. ELT Reset 20
  - E. Functional Check 20
- 3. Specifications 21
  - A. Environmental and Physical 21
  - B. Electrical 22
  - C. Antenna 23

TEST AND FAULT ISOLATION 24
- 1. Inspection and Test Regulatory Requirements 24
  - A. United States 24
  - B. Canada 24

C. Other Countries 24
2. Inspection and Test Procedures 25
A. Checklist 25
B. Preparation 25
C. Coax Cable and Wiring Connections Inspection – Item 1 25
D. Mounting Tray and Hardware Inspection – Item 2 25
E. Battery Pack Inspection – Item 3 26
F. G-Switch Functional Check – Item 4 26
G. Performance Test Setup 27
H. 121.5 MHz Frequency Measurement and Audio Modulation Check– Items 5a and 5b 27
I. 121.5 MHz Power Output Measurement – Item 5c 28
J. 406 MHz Frequency Measurement – Item 5d 28
K. 406 MHz Power Output Measurement – Item 5e 28
L. Current Draw Test – Item 5f 28
M. Digital Message Verification – Item 5g 30
N. ELT Reset Check – Item 5h 30
O. Installed Transmitter / Antenna Test – Item 6 30
P. Antenna Test – Item 7 31
Q. Inspection and Test Documentation – Item 8 31
3. Fault Isolation 31
A. Self-Test 31
B. Troubleshooting 33

REMOVAL 34
1. ELT 34
A. ELT Removal 34
2. Battery 35
A. Battery Removal 35
3. Material or Equipment Return 36
A. Shipment Information 36
B. Return Material Authorization 37

INSTALLATION 38
1. Regulatory Requirements and Guidelines 38
A. For US Registered aircraft: 38
B. TSO C126a, Paragraph D 38
C. FAA 38
D. Canada 38
E. Other Countries 38
F. RTCA 39
2. Mounting Tray 40
A. Location 40
B. Installation 42
3. Antenna 43
A. General 43
B. Location 43
C. Installation General Info 43
4. Remote Switch 45
A. Location 45
B. Installation 46

5. Buzzer 46
   A. Location 46
   B. Installation 46
6. Wiring 48
   A. General Considerations and Recommendations 48
   B. Remote Switch Harness Fabrication 52
   C. ELT D-Sub Plug Installation 53
   D. Cockpit Remote Switch 9-Pin Plug Installation 54
   E. Antenna Connection 54
   F. Cockpit Remote Switch Power Connection 54
   G. Airframe Ground Connections 55
   H. ELT Programming 55
   I. RS-232 Acceptable Nav Data 55
7. ELT Installation and Test 55
   A. Installation 55
   B. Harness ELT D-Sub Plug Sealing 57
   C. Installation Documentation 58
8. Battery Pack Installation 58
   A. Battery Installation and Reinstallation 58

ILLUSTRATED PARTS LIST 60
1. Introduction 60
   A. Purpose 60
   B. IPL Usage Guide 60
2. Manufacturer Name and Address 60
   A. Ordering Information 60

APPENDIX A – ELT REGISTRATION 64
1. Background Information 64
   A. Hex ID Code (15-Hex ID) 64
2. Registration 64
   A. Responsibility 64
   B. Required Information 64
   C. Registration Information Resources 64
   D. Where to Register 64

LIST OF ACRONYMS, ABBREVIATIONS AND DEFINITIONS

Term	Definition
AC	Advisory Circular – Federal Aviation Administration (USA) bulletin with special information. For the purposes of this document, the acronym AC does not refer to electrical alternating current.
AWG	American Wire Gauge - An electrical wire diameter standard. Look for this acronym in front of or following a wire size number.
BNC CONNECTOR	A coax cable connector having 50Ω impedance and used for RF signal connections.
CAR	Canadian Aviation Regulations – The rules and regulations governing the manufacture, certification, operation, maintenance and alteration of aircraft in Canada.
CFR	Code of Federal Regulations – The general and permanent rules published in the Federal Register by the executive departments and agencies of the Federal Government. Title 14, "Aeronautics and Space", contains the FARs.
CONTAINER	The term "Container", within the context of this document, refers to a device designed to suppress RF signals, such that the broadcast of an ELT placed in the container cannot reach the SAR satellite system.
COSPAS-SARSAT	The international search and rescue consortium, that governs the international satellite-based search and rescue distress alert detection and information distribution system. For a complete description, go to the official web site for the International COSPAS-SARSAT Program, http://www.cospas-sarsat.int/en/
D-SUB CONNECTOR	D-type (shaped), subminiature connectors – connector for low voltage/current signals and electrical currents.
DER	Designated Engineering Representative – An individual qualified and designated by the FAA to approve, or recommend approval, of technical data to the FAA.
DRIP LOOP	Extra wire length used to form a U-shaped bend in a wire or cable. Water or other fluids will flow down to the bottom of the loop and drip off. Electrical connections are made at the top of the loop.
ELT	Emergency Locator Transmitter – ELTs are installed on aircraft and used to send emergency signals to the SAR satellite system. The word "Beacon" is associated with these devices.
EMI	Electromagnetic Interference – An undesirable disturbance that affects an electrical circuit due to either electromagnetic conduction or electromagnetic radiation emitted from an external source; also called radio frequency interference or RFI.
EUROCAE	European Organization for Civil Aviation Equipment – EUROCAE documents is widely referenced as a means of compliance to European Technical Standard Orders (ETSOs) and other regulatory documents.
FAA	Federal Aviation Administration – The United States government agency for aircraft safety and regulation.
FAR	Federal Aviation Regulations – The rules and regulations governing the manufacture, certification, operation, maintenance, repair and alteration of aircraft in the United States.
FORM 337	FAA Form 337 is required when a major repair and/or major alteration is performed on an aircraft. Refer to FAR, Part 43, Appendix A and the definitions of Major Repair/Alteration contained in FAR, Part 1, for guidance.
FSDO	Flight Standards District Office – FAA district offices responsible for aircraft certification, operation, maintenance and modification issues, approvals and enforcement.

G-SWITCH	Velocity switch that detects sudden deceleration and is used to automatically activate an ELT; may also be referred to as a "crash sensor".
LED	Light Emitting Diode – Semiconductor device that emits light when current is passed through it. Usually used as a status or warning indicator.
MIL	The three-letter acronym that stands for "Military" and precedes military specifications and standards numbers (e.g., MIL-W-2828 would indicate a wire specification and MIL-STD-2828 would indicate a standard).
P/N	Part Number – Refers to an ACR part number, unless otherwise noted.
PLUG	The term "Plug", within the context of this document, refers to the male half of an electrical connector.
RECEPTACLE	The term "Receptacle", within the context of this document, refers to the female half of an electrical connector.
RF	Radio Frequency – The range of electromagnetic radiation that constitutes the radio spectrum and corresponds to the frequency of alternating current electrical signals used to produce and detect radio waves.
RTCA	Radio Technical Commission for Aeronautics – Organization that makes recommendations for airworthiness; refer to http://www.rtca.org/aboutrtca.asp for more information.
RTV	A rubbery silicon-based adhesive typically used to prevent vibration problems and water intrusion.
SAR	Search and Rescue
SCREEN ROOM	Refers to a room designed to block RF signals, such that the broadcast of an ELT placed in the screen room cannot reach the SAR satellite system.
SERVICE LOOP	A length of wire or cable at the connection point, of sufficient length to allow a component to be withdrawn from its mounting position and disconnected from its associated wiring.
TETHER	A cord or similar device that anchors something movable to a stationary point or anchors two items together, such that they cannot become separated beyond the length of the tether.
TSO	Technical Standard Order – A TSO is a minimum performance standard issued by the FAA for specified materials, parts, and appliances used on civil aircraft.
UTC	Coordinated Universal Time – A time standard based on International Atomic Time. UTC is the time system used in aviation and is often associated with Greenwich Mean Time (GMT) and/or "Zulu" time.
VHF	Very High Frequency – The 30 MHz to 300 MHz radio frequency band.
VSWR	Voltage Standing Wave Ratio – The ratio of the amplitude of a partial standing wave at an antinode (maximum) to the amplitude at an adjacent node (minimum), in an electrical transmission line. An ideal transmission line would have a VSWR of 1:1.

LIST OF FIGURES

Figure 1 ARTEX ELT 1000 Beacon and Mounting Tray 18
Figure 2 Remote Switch Front View 18
Figure 3 Buzzer 19
Figure 4 Battery Pack Assembly 19
Figure 5 Antennas 19
Figure 6 Performance Test Setup 27
Figure 7 Current Draw Test Setup 29
Figure 8 Short & Long 406 MHz Message Examples 30
Figure 9 ELT Removal Sequence 34
Figure 10 Metal Strap Opening 35
Figure 11 Battery Pack Removal 36
Figure 12 ARTEX ELT 1000 Outline & Dimensions 40
Figure 13 ELT 1000 Metal Strap Minimum Clearance Dimensions 41
Figure 14 Typical Mounting Tray Installation 42
Figure 15 Rod Antenna 110-338, 110-338-01 and A3-06-2835 Outlines and Dimensions 44
Figure 16 Blade Antenna 110-340 Outlines and Dimensions 45
Figure 17 Whip Antenna 110-773 Outline and Dimensions 45
Figure 18 Remote Switch Outline and Dimensions 46
Figure 19 Buzzer Outline and Dimensions 47
Figure 20 Typical 2-Wire Installation for Unshielded Harness 48
Figure 21 Typical 2-Wire Installation for Shielded Harness 49
Figure 22 Typical 5-Wire Installations for Metal Airframes 50
Figure 23 Typical 5-Wire Installations for Composite Airframes 51
Figure 24 Remote Switch Harness Arrangement 52
Figure 25 Harness Plug Assembly 54
Figure 26 ELT Installation Sequence 56
Figure 27 Metal Strap Closing 57
Figure 28 Battery Pack Installation 58
Figure 29 ELT 1000 Main Assembly and Installation 61
Figure 30 Harness Components 62
Figure 31 Antennas 63

RECORD OF REVISIONS

REVISION	CHANGE	DATE	REVISION	CHANGE	DATE
A	W/I 05-EN-05	1/25/13	AA	ECO 17471	1/15/21
B	ECO 15327	3/1/13	AB	ECO 18023	7/13/23
C	ECO 15360	3/21/13	AC	ECO 18411	9/12/25
C1	DECO 15369	4/2/13			
D	ECO 15619	5/13/14			
E	ECO 15619	5/13/14			
F	ECO 15830	12/1/14			
G	ECO 15937	3/19/15			
H	ECO 16129	9/2/15			
J	ECO 16173	10/23/15			
K	ECO 16240	1/19/16			
L	ECO 16440	6/30/16			
M	ECO 16495	9/7/16			
N	ECO 16503	9/14/16			
P	ECO 16551	12/7/16			
R	ECO 16575	1/18/17			
U	ECO 16714	7/20/17			
V	ECO 17084	1/20/2020			
W	ECO 17261	4/7/2020			
Y	ECO 17300	5/18/2020			

SERVICE BULLETIN LIST

SERVICE BULLETIN NO	ISSUE DATE	SUBJECT	MANUAL REV NO	MANUAL REV DATE

LIST OF EFFECTIVE PAGES

SUBJECT	PAGE	DATE	SUBJECT	PAGE	DATE
Title Page	1	9/12/25	Removal	34	5/28/20
Notices	2	9/12/25		35	5/28/20
Table of Contents	3	5/28/20		36	5/28/20
	4	5/28/20	Installation	37	5/28/20
	5	5/28/20		38	5/28/20
List of Acronyms, Abbreviations and Definitions	6	5/28/20		39	5/28/20
	7	5/28/20		40	5/28/20
List of Figures	8	5/28/20		41	5/28/20
Record of Revisions	9	9/12/25		42	5/28/20
Service Bulletin List	10	5/28/20		43	5/28/20
List of Effective Pages	11	9/12/25		44	5/28/20
Introduction	12	5/28/20		45	5/28/20
	13	5/28/20		46	5/28/20
	14	7/13/23		47	5/28/20
	15	5/28/20		48	5/28/20
	16	5/28/20		49	5/28/20
Description and Operation	17	5/28/20		50	5/28/20
	18	5/28/20		51	5/28/20
	19	5/28/20		52	5/28/20
	20	5/28/20		53	5/28/20
	21	5/28/20		54	5/28/20
	22	1/15/21		55	5/28/20
	23	5/28/20		56	5/28/20
Test and Fault Isolation	24	9/12/25		57	5/28/20
	25	5/28/20		58	5/28/20
	26	5/28/20	Illustrated Parts List	59	5/28/20
	27	5/28/20		60	5/28/20
	28	5/28/20		61	5/28/20
	29	5/28/20		62	5/28/20
	30	5/28/20		63	5/28/20
	31	5/28/20	Appendix A	64	5/28/20
	32	5/28/20		65	5/28/20
	33	5/28/20			

INTRODUCTION

1. Manual Usage

A. General

1) This manual describes the operation, installation and maintenance of the ARTEX ELT 1000 emergency locator transmitter (ELT). The information is provided to ensure initial and continued airworthiness. Information presented in this manual is accurate at the time of printing, but is subject to change. Refer to the ARTEX web site at www.acrartex.com for the latest information and any updates to this manual.
2) Information on the COSPAS-SARSAT emergency locator beacon registration requirements and procedures is provided in Appendix A – ELT Registration on page 64.
3) Web links provided in this manual were accurate at time of printing but may be subject to change.
4) ACR Electronics, Inc. reserves the right to add approved components to the ELT system; including but not limited to antennas, remote switches and coaxial cables. These changes are approved as "minor changes" pursuant to FAR 21, Subpart O for TSO holders.
5) Regulatory references contained herein are generally confined to Web links provided in this manual and were accurate at time of printing, but may be subject to change. Consult your national aviation authority for applicable requirements.

B. Application

1) This manual constitutes supporting data/documentation for the ARTEX ELT 1000, including:
   a) Description and Operation
   b) Test and Fault Isolation (includes inspection criteria)
   c) Removal
   d) Installation
   e) Registration
   f) Illustrated Parts List
2) In the United States, the ARTEX ELT 1000 must be installed and maintained in accordance with the requirements herein, 14 CFR, FAR Parts 43, -91 and other airworthiness requirements, as applicable.
3) In Canada, the ARTEX ELT 1000 must be installed and maintained in accordance with the requirements herein as well as Canadian Aviation Regulations (CAR); Part V, Paragraph 551.104 as well as other CAR airworthiness requirements, as applicable.
4) ARTEX ELT 1000 installation and maintenance in all other countries must comply with the requirements herein as well as applicable national airworthiness requirements. In the absence of any inspection requirements from national regulatory authorities, operators should follow the annual inspection procedures outlined in Inspection and Test Regulatory Requirements, subsection United States on page 24 of this manual.
5) The accessories (i.e. remote switch and antennas) referenced in this manual are those most commonly associated with the ARTEX ELT 1000. Other options, such as an alternative remote switch configuration or a navigation interface, should be installed and maintained in accordance with instructions specific to the accessory.

   NOTE: Contact ACR Electronics, Inc. for optional accessories approved for use with ARTEX ELT 1000s.

6) To ensure proper operation, only parts listed in the Illustrated Parts List of this manual or those recommended by ACR Electronics, Inc. may be used as replacement parts for the ARTEX ELT 1000.

2. Model Description

A. ELT 1000

1) The ARTEX ELT 1000 is a type AF (Automatic Fixed) beacon, which transmits on 121.5 and 406 MHz.
2) The housing and mounting tray are made of impact-resistant polycarbonate-polyester plastic.
3) An installation kit, cockpit remote switch, coax cable, audible buzzer and fixed antennas are available.

3. Approvals

A. ELT

1) FAA TSO C126b, type AF
   a) This article meets the minimum performance and quality control standards required by a technical standard order (TSO). Installation of this article requires separate approval.
2) ETSO-C126a (EASA.IM.21O.10050368)
3) COSPAS-SARSAT TAC 251
4) For all other type approval information, please refer to the ARTEX web site at www.acrartex.com.

B. Battery

CAUTION: LITHIUM BATTERY SAFETY CONCERNS INCLUDE THE POSSIBILITY OF FIRE, VENTING VIOLENTLY, AND VENTING OF TOXIC GASES.

1) The lithium battery packs used on the ARTEX ELT 1000 are certified under TSO C142a.

NOTE: The conditions and tests for TSO approval of this article are minimum performance standards. Those installing this article, on or in a specific type or class of aircraft, must determine that the aircraft installation conditions are within the TSO standards. TSO articles must have separate approval for installation in an aircraft. The article may be installed only according to 14 CFR part 43 or the applicable airworthiness requirements. Lithium cell and battery safety concerns include the possibility of fire and venting of toxic gases.

2) If the battery is installed by a third party, it must be ascertained whether it is an ARTEX Authorized Service center. To find an authorized service center, go to http://www.acrartex.com/where-to-buy/find-a-battery-service-provider/

C. RTCA DO-160G Compliance

1) DO-160G Environmental Categories: [C1X]BC[DO-204A][S(C)]XRXXXSZZAZ[ZCX][DO-204A]M[XXXXXX][XXXX]XXX
2) The DO-160G environmental categories breakdown is detailed in Table 1.

CAT	SECTION	DESCRIPTION	COMMENTS
Extended C1	4.0	Temperature/Altitude	-20 °C to +55 °C , Altitude +55,000 ft.
X	4.5.5	In-Flight Loss of Cooling	Not Applicable
B	5.0	Temperature Variation	B = 5°C/min
C	6.0	Humidity	10 Day Test
DO-204A	7.0	Operational Shocks and Crash Safety	ED-62A/DO-204A in lieu of RTCA DO-160G test
[S(C)]	8.0	Vibration	
X	9.0	Explosion Atmosphere Test	Not Applicable
R	10.0	Waterproofness	Continuous Stream
X	11.0	Fluid Susceptibility	Not Applicable
X	12.0	Sand and Dust	Not Applicable
X	13.0	Fungus Resistance Test	Not Applicable
S	14.0	Salt Fog	
Z	15.0	Magnetic Effect Test	
Z	16.0	Power Input Test	
A	17.0	Voltage Spikes	
Z	18.0	AF Susceptibility	
ZCX	19.0	Induced Signal Susceptibility	
DO-204A	20.0	RF Susceptibility	L minimum is required for rotorcraft or composite fuselage of fixed wing.
M	21.0	RF Emissions	
[XXXXXX]	22.0	Lightning Induced Transient Susceptibility	Not Applicable
[XXXX]	23.0	Lightning Direct Effects	Not Applicable
X	24.0	Icing Test	Not Applicable
X	25.0	Electrostatic Discharge Test	
X	26.0	Fire, Flammability Test	Fire Resistance ED-62A Optional for ELT(AF)

Table 1 Environmental Categories

4. Frequency Allocation

A. Application

1) This section addresses the 406.0 - 406.1 MHz transmitter frequencies which are assigned to the distress frequency band.

B. Discussion

1) The product identification label on each ELT specifies the transmission frequencies of the individual ELT. The ARTEX ELT 1000 transmits a frequency of 406.040 MHz. Allocation of frequencies, based on beacon population per specified frequency band, is controlled by COSPAS-SARSAT.
2) The frequency references throughout this manual for the 406 MHz component should be considered the baseline and the specific frequency indicated on the ELT product label should be substituted.

5. References

A. Regulatory Documents

1) The following regulatory documents are referred to herein. When referring to such documents, it is the manual user's responsibility to ensure they are using the latest revision or release of such documents. To that end, the revision designator of specific document numbers has not been included, with the exception of the RTCA document listing, which reflects the revision level of the documents at the time of TSO testing and certification.
2) Except in the case of a printed manual, reference documents available on-line or source locations are linked to applicable web sites.
3) United States
   a) AC 43-9, "Maintenance Records"
   b) AC 43-210, "Standardized Procedures for Requesting Field Approval of Data, Major Alterations, and Repairs"
   c) AC 43.9-1, "Instructions for Completion of FAA Form 337"
   d) AC 43.13-1, "Acceptable Methods, Techniques, and Practices – Aircraft Inspection and Repair"
   e) AC 43.13-2, "Acceptable Methods, Techniques, and Practices - Aircraft Alterations"
   f) CFR Title 47, Part 87, "Aviation Services"
   g) FAR, Part 43, "Maintenance, Preventive Maintenance, Rebuilding, and Alteration"
   h) FAR, Part 91, "General Operating and Flight Rules"
   i) TSO-C126b, "406 MHz Emergency Locator Transmitter (ELT)"
   j) TSO-C142a, "Non-Rechargeable Lithium Cells and Batteries"
4) Canada
   a) CAR, Part V, "Airworthiness"
   b) CAR, Part VI, "General Operating and Flight Rules"
5) COSPAS-SARSAT
   a) C/S G.005, "Cospas-Sarsat Guidelines on 406 MHz Beacon Coding, Registration and Type Approval"
   b) C/S S.007, "Handbook of Beacon Regulations"
6) RTCA – The following documents are available for purchase at RTCA's Web Site, www.rtca.org, or by mail:
   a) DO-160G, "Environmental Conditions and Test Procedures for Airborne Equipment"
   b) DO-178B, "Software Considerations in Airborne Systems and Equipment Certification"
   c) DO-182, "Emergency Locator Transmitter (ELT) Equipment Installation and Performance"
   d) DO-204A, "Minimal Operational Performance Standards for 406 MHz Emergency Locator Transmitters (ELT)"

B. Other Documents

1) The ARTEX model beacon programmer or beacon test set operating manuals are available from ACR Electronics, Inc. upon request:
   a) Document number 570-1000, "453-1000 ELT Test Set Operation"
   b) Document number 570-2000, "453-2000 Handheld Programmer Operations Manual"
   c) Document number Y1-03-0272, "A3-06-2824 Handheld Programmer Operations Manual"
   d) Document number Y1-03-0273, "A3-06-2825 ELT Test Set Operation"

DESCRIPTION AND OPERATION

1. Description

A. Functional Overview

1) The ELT automatically activates during a crash and transmits a continuous standard sweep tone on the 121.5 frequency. The first digitally encoded 406 MHz burst will start transmitting. Approximately every 50 seconds thereafter, the 406 MHz transmitter turns on and transmits an encoded signal of either 440ms or 520ms, depending on the beacon programming protocol. This message is received by the COSPAS-SARSAT Search and Rescue (SAR) satellite system.
2) The information contained in the message includes:
   a) Beacon serial number, or
   b) Aircraft identification or registration number
   c) Country of registration and country code
   d) Position coordinates, if beacon is programmed to receive position data from the aircraft navigation system
3) When the 406 MHz signal is detected by the Cospas–Sarsat satellite LEO (Low Earth Orbit system), a position is calculated and the 121.5 MHz signal is used to home in on the crash site.
4) The 406 MHz transmitter will operate in this mode for 24 hours and then shut down automatically. The 121.5 MHz transmitter (homer transmitter) will continue to operate until the batteries are exhausted, which is at least 50 hours.
5) The location accuracy of the 406 MHz transmitter is typically 3 km. If position information is extracted from the aircraft navigation system, the accuracy improves to approximately 100 meters. The ELT 1000 is able to accept position information from RS-232 (A/B Protocol).
6) The 406 MHz digital message provides search and rescue authorities the information to contact the owner/operator of the aircraft through information contained in a database. The database may include:
   a) Type of aircraft and aircraft registration number
   b) Owner address and telephone number
   c) Alternate emergency contact
7) Previous to February 9, 2009, the COSPAS-SARSAT system used the 121.5 MHz signal as an aid to determine beacon location. As of this date, the use of this signal for satellite location has been terminated, as the accuracy proved too poor. 406 MHz capable ELTs replace the older Class B beacons.
8) Aircraft communications transceivers are not capable of receiving 406 MHz transmissions; therefore, the only methods of monitoring the ELT are:
   a) The blinking cockpit remote switch LED
   b) The buzzer
   c) 121.5 MHz transmissions, which can be monitored using the aircraft communications transceiver or an AM radio tuned to 121.5 MHz

B. System Components

1) The ARTEX ELT 1000 housing assembly and tray are made of high impact, fire resistant, polycarbonate-polyester plastic (see Figure 1).

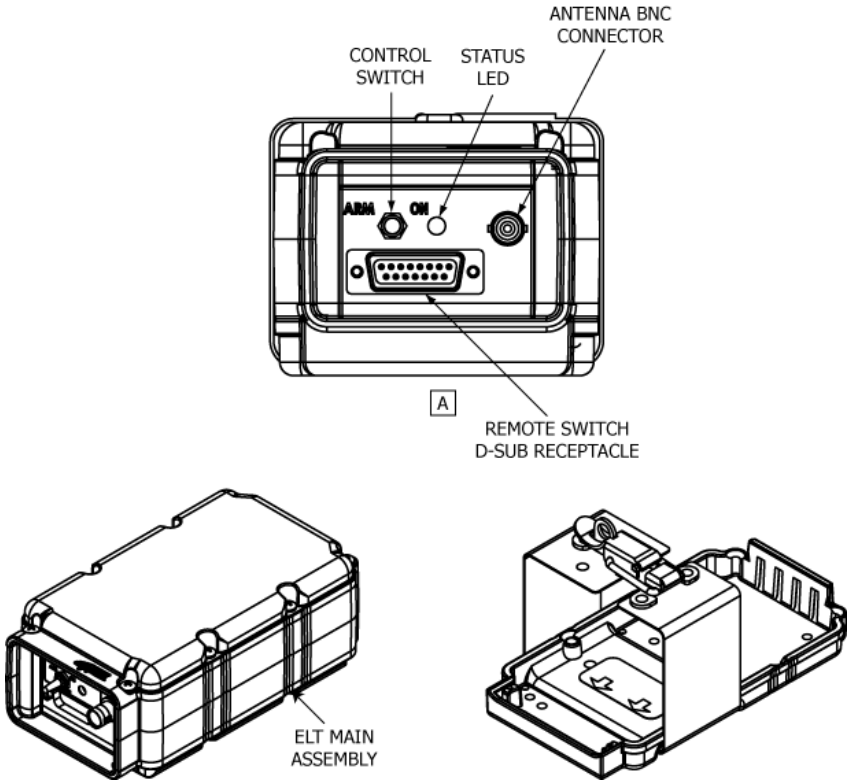

Figure 1 ARTEX ELT 1000 Beacon and Mounting Tray

2) The cockpit-mounted remote switch assembly includes a status LED and control switch. The switch allows the operator to manually activate and reset the ELT for testing (see Figure 2).

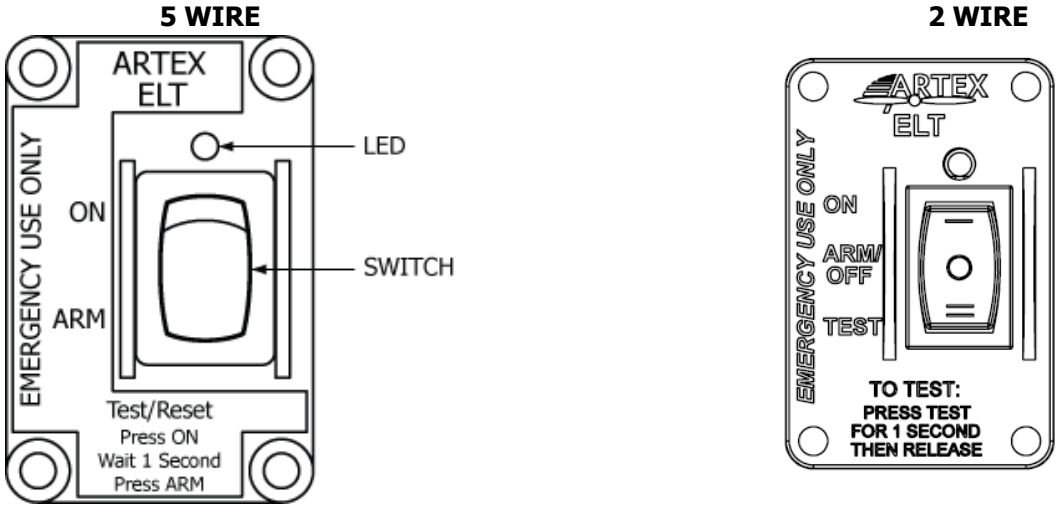

Figure 2 Remote Switch Front View

3) The buzzer provides an audible alert when the ELT is active (see Figure 3).

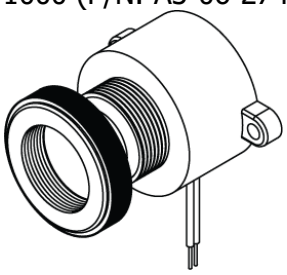

Figure 3 Buzzer

4) The battery pack for the ARTEX ELT 1000 consists of two "D" size Lithium Sulfur Dioxide cells (see Figure 4).

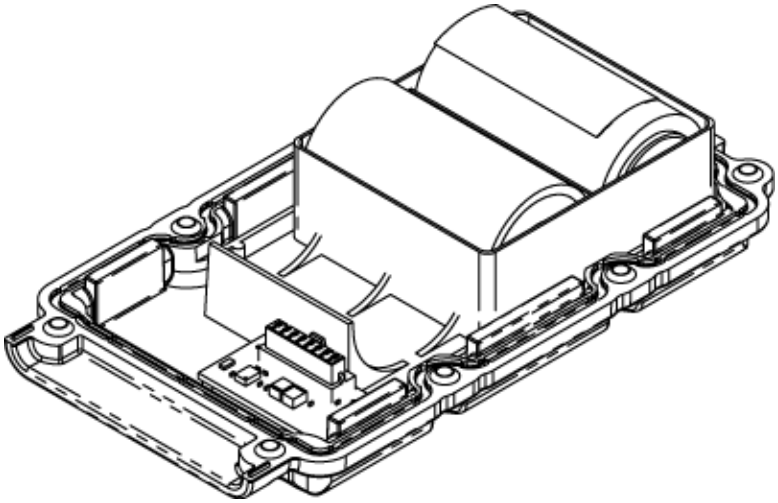

Figure 4 Battery Pack Assembly

5) There are 5 antennas that are used with the ARTEX ELT 1000 (see Figure 5). Selection of the proper antenna is dependent upon the application.

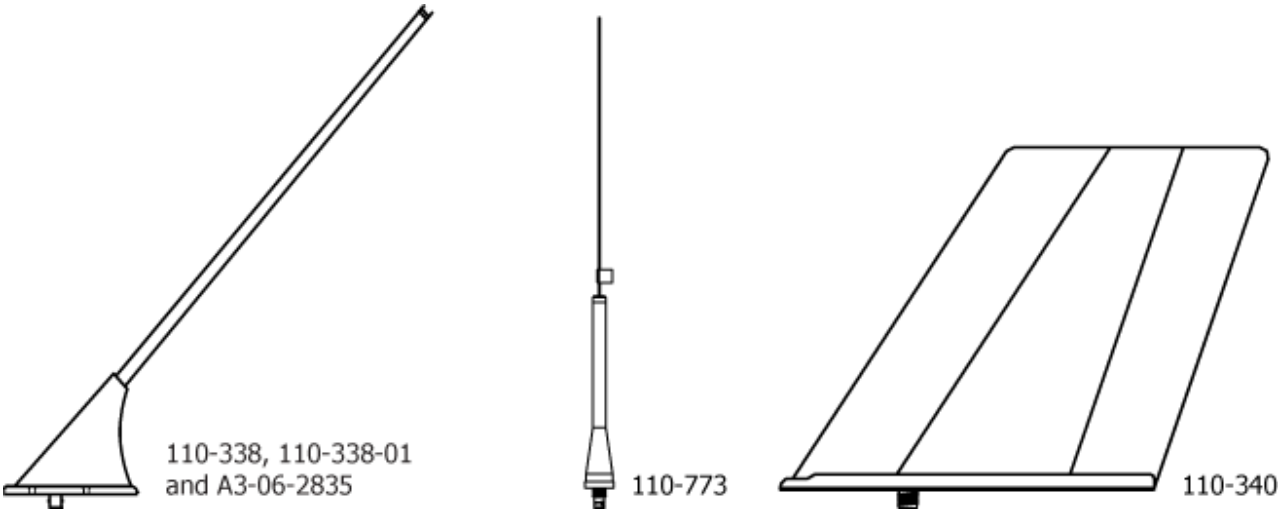

Figure 5 Antennas

2. Operation

A. Overview

1) A primary feature of the ARTEX ELT 1000 is its simplicity of operation.
2) A connection jumper ("G-switch loop") between pins 5 and 12 on the connector enables the G-switch circuitry, allowing activation when the acceleration threshold is exceeded. The jumper is located in the mating connector of the cockpit remote switch wire harness. When this connector is removed, the ELT can be manipulated without the possibility of activation.
3) With the G-switch loop in place, neither the cockpit remote switch nor the ELT local switch can be positioned to prevent automatic activation. With the G-switch loop open (removed), the ELT cannot be activated by dropping, rough handling or during shipping.
4) Activation is indicated by the presence of the swept audio tone transmitted on the 121.5 MHz signal, the buzzer sounding and the flashing cockpit remote switch and/or ELT local LED. All these indicators immediately begin upon ELT activation.
5) To deactivate the beacon, either the position of the local ELT switch or the cockpit remote switch must be changed from "ON" to "ARMED". If activation is from the G-switch, the switch position must first be set to "ON" then changed to "ARMED".

   NOTE: The ELT CANNOT be disarmed or disabled from the cockpit. Cockpit operation is limited to activating and resetting the ELT.

6) A warning buzzer is required by TSO C126a to indicate ELT activation when the aircraft is not operating. The buzzer is powered by the ELT and is not dependent upon the aircraft power for operation. The indicator 'beeps' periodically, with the periods between pulses increasing after 12 hours.

B. Normal Operation

NOTE: The beacon will immediately begin transmitting at 121.5 MHz and will continue to do so until the ELT is deactivated or 24 hours have expired.

NOTE: The beacon will begin transmitting at 406 MHZ approximately 50 seconds after activation and will continue to do so at approximately 50 second intervals until the ELT is deactivated or 24 hours have expired.

1) In normal operation, the ELT is "ready to activate". The cockpit remote switch and the local switch on the ELT are both in the "ARM" position. The G-switch loop (connection jumper between pins 5 and 12 of the connector) is in place to enable the ELT. In this condition, if the ELT movement causes the G-switch threshold to be exceeded, the beacon will activate.

C. Manual Activation

1) The ELT may be manually activated by placing either the remote switch or the ELT local switch in the "ON" position. This forces the ELT to activate, regardless of whether or not the G-switch loop is in place.

   NOTE: The ELT cannot be reset if either the cockpit remote switch or the ELT local switch is in the "ON" position.

D. ELT Reset

1) If the ELT is inadvertently activated (for indications, see 4) above), reset it by moving either the cockpit remote switch or the local ELT switch to the "ON" position, and then move it back to the "ARM" position. If the switch is already in the "ON" position, move it to the "ARM" position.

E. Functional Check

1) A monthly functional check is recommended to verify operational status of the ELT. Perform in accordance with ELT Reset Check – Item 5h.

3. Specifications

A. Environmental and Physical

1) Table 2 lists the environmental and physical specifications of the ELT 1000.

CRITERIA	PARAMETER	CHARACTERISTIC
Temperature	Storage	-55°C to +85°C
	Operating	-20°C to +55°C
Mechanical	Vibration	10 *g*, 5 Hz to 2,000 Hz
	Shock	500 *g* for 4 ms
	Crashworthiness	100 *g* for 23 ms
	Humidity	95% for 50 hours
	Penetration	55 lbs from 6 in (25 kg from 15 cm)
	Crush	1,000 lbs (454 kg)
	Altitude	+55,000 ft (16,764 m)
Automatic Activation	Primary G-switch	4.5 ± 0.5 ft/sec (2.3 G)
Manual Activation	Unit or remote switch	
Weight	ELT complete w/Battery Pack, and Mounting Tray	1.95 lbs (0.8 kg)
Dimension (L x W x H)	ELT Complete w/Battery Pack, and Mounting Tray	6.60” x 3.69” x 2.86” (168 x 94 x 73 mm)
Software/Firmware	In accordance with RTCA/DO-178B, Level D	

Table 2 Environmental Specifications

B. Electrical

1) Table 3 lists the electrical specifications of the ELT 1000.

CRITERIA	PARAMETER	CHARACTERISTIC
Operating Frequencies	406.040 MHz, or higher	± 1 kHz
	121.5 MHz	± 6.075 kHz
Modulation	406 MHz	Bi-Phase L (G1D)
	121.5 MHz	Amplitude Modulation (A3X)
Transmitter Duty Cycle	406 MHz	440 or 520 ms (± 1%), every 50 seconds (± 5%)
	121.5 MHz	Continuous
Peak Effective Radiated Power (EIRP)	406 MHz	EIRP 5 W (37 dBm ± 2 dBm) for 24 hrs @ -20°C to +55°C
	121.5 MHz	EIRP 50 mW (17 dBm) for 50 hrs @ -20°C to +55°C
Occupied Bandwidth	406 MHz	20 KHz max
	121.5 MHz	25 KHz max
Spurious Emissions	406 MHz	Per RTCA/DO-204A
	121.5 MHz	Per CFR Title 47 (FCC), Part 87
Battery	Type of Cell	Lithium Sulfur Dioxide
	Voltage	5.9 (typical)
	Amp-Hour Rating	7.5

Table 3 Electrical Specifications

Note: Nominal power output of the 121.5 MHz and 406 MHz may vary up to +/- 2 dBm when factoring in cable losses and tolerancing of key design components.

C. Antenna

1) Table 4 lists the antenna specifications of the ELT 1000.

PARAMETERS	CHARACTERISTICS			
	110-338/01 Tri-band	**110-773**	**110-340**	**A3-06-2835**
Style	Rod	Whip	Blade	Rod
Frequencies	121.5, 406 MHz			
VSWR	121.5 MHz–2.0:1 Max.			
	406 MHz – 1.5:1 Max			
Polarization	Vertical Monopole			
Radiation Pattern	Omnidirectional			
Impedance (ohms)	50 Nominal			
Weight	0.45 lbs (0.20kg)	0.18 lbs (0.08 kg)	1.40 lbs (0.64 kg)	0.45 lbs (0.20kg)
Coax Cable	RG-142 or RG-400 (>0.5dB <1 dB Insertion Loss)*			
Connector	BNC Female			
Dimensions (Base to Tip)	15.5 in (394 mm)	15 in (381 mm)	7.75 in (197 mm)	15.5 in (394 mm)

Table 4 Antenna Specifications

NOTE: The ARTEX recommended coaxial cables Part No. 611-6013-04 (6 ft) and 611-6013-13 (12 ft) comply with the minimum and maximum cable insertion losses quoted above.

TEST AND FAULT ISOLATION

1. Inspection and Test Regulatory Requirements

A. United States

1) In accordance with FAR Part 91, Subpart C, § 91.207 (d), the ELT must be inspected within 12 calendar months after the last inspection for:
   a) Proper installation
   b) Battery corrosion
   c) Operation of controls and crash sensor; and
   d) The presence of a sufficient signal radiated from its antenna.
2) All maintenance shall be performed in accordance with FAR Part 43, Appendix D, which requires the following inspections at each annual or 100-hour inspection:
   a) ELT and mount for improper installation
   b) Wiring and conduits for improper routing, insecure mounting, and obvious defects
   c) Bonding and shielding for improper installation and poor condition
   d) Antenna, including trailing antenna, for poor condition, insecure mounting, and improper operation

B. Canada

1) CAR Part VI, Standard 625, Appendix C, requires the ELT to be inspected at intervals not exceeding 12 months.
2) All maintenance and testing shall be performed in accordance with the requirements of CAR Part V, Standard 571, Appendix G, which requires:
   a) Corrosion inspection
   b) Operational testing
   c) Performance testing (not to be satellite receivable, i.e. in a Faraday cage), including:
      1. Measured peak power after 3 minutes of operation
      2. Measured frequency after 3 minutes of operation
      3. Audio modulation, which shall be recognizable as a typical ELT signal
      4. Measured current draw in the 'ARM' (OFF) and in the 'ON' position, as specified by the manufacturer
      5. The automatic activation system

C. Other Countries

1) For all other countries, maintenance and testing shall be conducted in accordance with the requirements of applicable national regulatory authorities and the requirements herein, as applicable. Local regulations and requirements shall take precedence.
2) In the absence of any inspection requirements from national regulatory authorities, operators should follow the annual inspection procedures outlined in Inspection and Test Regulatory Requirements, subsection United States above.

2. Inspection and Test Procedures

A. Checklist

1) Table 5 provides a list of the ELT inspection and testing requirements, a copy of which may be used as a checklist to verify inspection and test completion. The item numbers in the table correspond to the item identifiers for each task.

NOTE: Items 5a through 5h are mandatory requirements only in Canada, in addition to meeting the other inspection and test requirements listed in Table 5.

ITEM NO.	DESCRIPTION	BY
1	Coax Cable and Wiring Connections Inspection	
2	ELT Mounting Tray and Hardware Inspection	
3	ELT Battery Pack Inspection	
4	G-Switch Functional Check	
5a	121.5 MHz Frequency Measurement	
5b	Audio Modulation Check	
5c	121.5 MHz Power Output Measurement	
5d	406 MHz Frequency Measurement	
5e	406 MHz Power Output Measurement	
5f	Current Draw Test	
5g	Digital Message Verification	
5h	ELT Reset Check	
6	Installed Transmitter Test	
7	Antenna Test	
8	Inspection and Test Documentation	

Table 5 ELT Inspection & Checklist

B. Preparation

1) Remove the ELT. See Figure 9 on page 33 for instructions.
2) Remove the battery pack. See on page 35 for instructions.

C. Coax Cable and Wiring Connections Inspection – Item 1

1) Check remote switch harness connector for corrosion, bent or broken pins and other damage.
2) Check antenna coax cable connectors for corrosion, bent or broken center conductor, and other damage.

NOTE: Pay special attention to the center conductor, which is prone to retracting into the connector housing.

D. Mounting Tray and Hardware Inspection – Item 2

1) Inspect mounting tray for cleanliness, cracks, and other damage
2) Check mounting tray hardware for corrosion and security

E. Battery Pack Inspection – Item 3

CAUTION: THE BATTERY PACK CONTAINS ELECTROSTATIC DISCHARGE SENSITIVE (ESD) COMPONENTS AND, AS SUCH, IT MUST BE HANDLED WITH CARE. IF POSSIBLE, WEAR A GROUNDED WRIST STRAP WHEN HANDLING THE BATTERY PACK DURING INSPECTION AND MAINTENANCE ACTIVITIES. TAKE PARTICULAR CARE TO AVOID TOUCHING THE EXPOSED CIRCUIT BOARD AND CONNECTOR PINS ON THE BOARD.

CAUTION: DO NOT USE ANY FOREIGN CLEANER ON ELT COMPONENTS. SUCH CHEMICAL AGENTS CAN BE HIGHLY DESTRUCTIVE TO THE MOUNTING HARDWARE AND ELT HOUSING, CAUSING CRACKING, FRACTURING AND OTHER DAMAGE.

1) Check battery cells, components, and connectors for corrosion and other damage. There should be no corrosion of the battery cells. The presence of any corrosion is cause to reject the battery pack.
2) Check wiring for breaks, damaged insulation, and improper or damaged connections.
3) Check housing for cracks and other visual damage.
4) Check the battery pack expiration date.
5) Replace the battery pack if any of the following conditions are true:
   a) After use in an emergency
   b) After an inadvertent activation of unknown duration
   c) When the total of all known transmissions exceeds one hour
   d) On or before battery replacement (expiration) date

NOTE: The new expiration date for replacing the battery must be legibly marked on the outside of the transmitter and entered in the aircraft maintenance record.

F. G-Switch Functional Check – Item 4

1) Reinstall the battery in accordance with Figure 28 on page 55.
2) Perform this functional check within the first 5 minutes after the hour (UTC), as required by AC 43.13-1, Chapter 12, § 12-22, Note 3.
3) Notify any nearby control tower of your intentions.
4) Install the 500-0079 G-switch Loop Test Connector Fixture on the ELT receptacle or jumper ELT receptacle pins 5 and 12.
5) Verify the ELT switch is in the "ARM" position.
6) Monitor 121.5 MHz on an AM receiver.
7) Activate the ELT by using a rapid forward (i.e., throwing) motion in the direction of the arrow on the ELT label, followed by a rapid reversing action.
8) Verify activation by listening for the aural sweep tone on the receiver. The LED on the ELT housing will also begin to flash, indicating activation. For proof, the AM radio will verify that the RF output is operational.
9) Reset the ELT by toggling the control switch to the "ON" position and then back to the "ARM" position.

NOTE: After removing the G-Switch loop plug, **wait at least 60+ seconds** before a Self-Test is done in order to get the 6 flash error, indicating the loop has been removed.

CAUTION: **IF ACTIVATED, THE ELT WILL SEND A LIVE BURST SIGNAL TO SEARCH AND RESCUE SATELLITES IF LEFT ACTIVE FOR 50 SECONDS OR MORE. BE SURE TO SWITCH ELT BACK TO THE "ARM" POSITION AS SOON AS THE SWEEP TONE IS VERIFIED.**

G. Performance Test Setup

1) Maximum Battery Test Time
   a) The ELT 1000 firmware continually keeps track of the beacon run time. The beacon controller microprocessor writes the operating time information to a memory IC in the battery pack, keeping the information up to date. Per FAA regulations, an ELT battery must be replaced if the operation time is greater than one hour.
   b) If the operation time exceeds one hour, an error indicator will be displayed when a self-test is performed (see Self-test section of this document). This does not affect the normal operation of the ELT 1000, but provides an indication to the user that the battery must be replaced, in order to comply with the FAA requirements. To minimize battery run time, carefully plan all testing and operation verifications, so to avoid unnecessary operation of the ELT.
2) Place the ELT in an RF enclosure or screen room to prevent RF emissions.
3) For final airworthiness verification, use the ELT's own battery pack as the power source for these measurements. An alternate power source can be used where lengthy servicing, other than the performance tests, is anticipated. Expired battery packs can be used if the airworthiness performance of the battery pack in the system is not required. The battery packs are capable of at least fifty (50) hours (2 X shelf life) of operation at the end of six years of useful life.
4) To prevent damage to the measurement equipment from the 5W, 406 MHz burst, install an RF attenuator (rated 50 ohm) between the ELT antenna output and the measurement equipment. Typical attenuation is 30 dB, 50 ohm, and rated at 5 watts for ½-second duration (see Figure 6 Performance Test Setup).

Figure 6 Performance Test Setup

H. 121.5 MHz Frequency Measurement and Audio Modulation Check– Items 5a and 5b

1) Connect the measuring device as specified in Figure 6 Performance Test Setup.
2) Activate the ELT by placing the control switch in the "ON" position.
3) Wait three minutes.
4) Perform an Audio Modulation Check (Item 5b) during the three-minute waiting period as follows:
   a) Monitor 121.5 MHz on an AM receiver.
   b) Listen for the downward swept tone on the receiver.
5) Measure the frequency. The frequency must be within the tolerance specified in Table 3 on page 22.

I. 121.5 MHz Power Output Measurement – Item 5c

1) Connect the measuring device, as specified in Figure 6 Performance Test Setup on page 27.
2) Activate the ELT, if necessary, by placing the control switch in the ON position.
3) Wait three minutes.
4) Read the displayed amplitude for 121.5 MHz. The amplitude must be within the minimum specified for 121.5 MHz in Table 3 on page 22, at the terminal output.

J. 406 MHz Frequency Measurement – Item 5d

CAUTION: POWER OUTPUT IS APPROXIMATELY 5 WATTS. ENSURE THAT ADEQUATE ATTENUATION IS INSERTED BETWEEN THE ELT AND THE MEASURING INSTRUMENT.

1) Connect the measuring device, as specified in Figure 6 Performance Test Setup on page 27.
2) Activate the ELT using the local ELT switch.
3) Wait three minutes.
4) Measure the frequency after the stabilization period. The frequency must be within the tolerance specified in Table 3 on page 22.

NOTE: The exact 406 MHz frequency is printed on the ELT product label.

K. 406 MHz Power Output Measurement – Item 5e

CAUTION: POWER OUTPUT IS APPROXIMATELY 5 WATTS. BE SURE ADEQUATE ATTENUATION IS INSERTED BETWEEN THE ELT AND THE MEASURING INSTRUMENT.

1) Connect the measuring device, as specified in Figure 6 Performance Test Setup on page 27.
2) Activate the ELT, if necessary, by placing the control switch in the ON position.
3) Wait three minutes.
4) Read the displayed amplitude of the 406 MHz burst that follows the three-minute wait period. The amplitude must be within the minimum specified for 406 MHz in Table 3 on page 22, at the output terminal.
5) Deactivate the ELT by placing the control switch in the "ARM" position.

L. Current Draw Test – Item 5f

CAUTION: EXERCISE EXTREME CAUTION TO AVOID A SHORT CIRCUIT CONDITION OF THE BATTERY PACK CONNECTIONS. THIS WILL BLOW A FUSE IN THE BATTERY PACK, FORCING REPLACEMENT.

CAUTION: ALL ON STATE CURRENT MEASUREMENTS MUST BE MADE WITH THE ANTENNA OUTPUT TERMINATED IN 50 OHMS.

CAUTION: THE 406 MHZ SIGNAL PULSES EVERY 50 SECONDS (APPROXIMATE) AND MAY DRAW UP TO 4 AMPERES FOR ½ SECOND. MANY METERS WILL NOT RESPOND THIS FAST OR READ THIS TYPE OF WAVEFORM ACCURATELY. BECAUSE OF THIS, ACR ELECTRONICS, INC. DOES NOT RECOMMEND MEASURING THE 406 MHZ BURST CURRENT.

1) Verify the ELT control switch is in the "ARM" position.
2) Disconnect the battery pack from the ELT.
3) Install test fixture 500-0057 in the power circuit in series between the battery pack connector and the ELT connector (see Figure 7 Current Draw Test Setup).

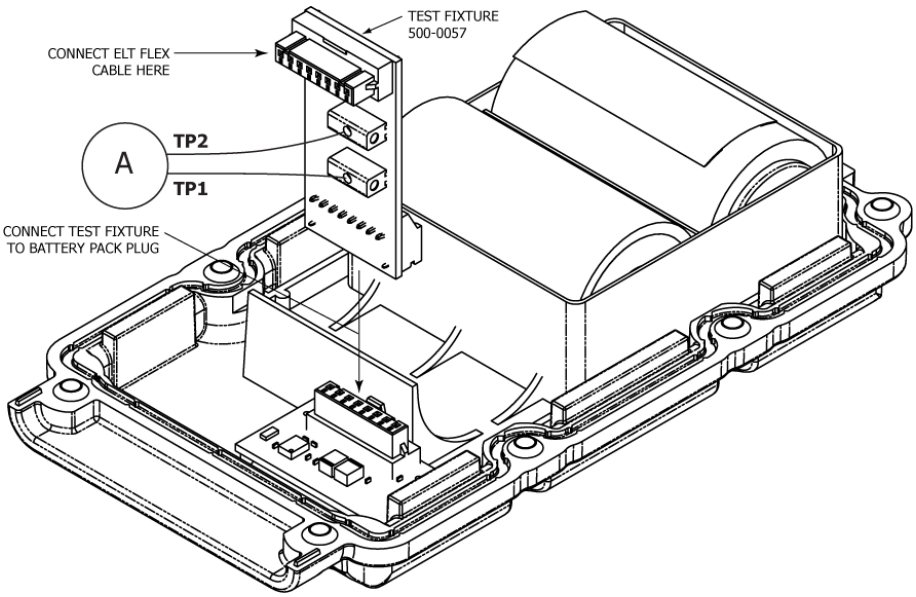

Figure 7 Current Draw Test Setup

4) Terminate the ELT RF output with a 50 Ω load.
5) Set the ammeter for the lowest possible scale and connect the positive lead to TP1 and the negative lead to TP2.
6) Measured current must be < 5 μA (micro-amps).

<u>CAUTION</u>: THE NEXT MEASUREMENT COULD CAUSE THE INTERNAL PROTECTION FUSE OF THE AMMETER TO BLOW, IF PRECAUTIONS ARE NOT OBSERVED.

7) Set the ammeter current range to accommodate 4A (amp).
8) Activate the ELT.
9) Allow ELT to transmit a 406 MHz burst. This will occur 50 seconds after activation.
10) Set the ammeter to read approximately 60 mA of current.
11) Observe reading. Current shall be ≤ 55 mA.
12) Deactivate the ELT.
13) Remove the test fixture and reinstall the battery pack in accordance with Figure 28 on page 55.

Hints:

a) Short the meter leads (at the meter) with a banana plug-type jumper lead to protect the fuses in the meter.
b) Using a spectrum analyzer as a load device, detect when the 406 MHz burst has occurred.
c) Remove the jumper and read the current just after the burst.
d) Replace the shorting jumper before the next burst.

M. Digital Message Verification – Item 5g

1) Use a beacon reader, such as ARTEX P/N 453-1000, 453-2000, 8700, or 8701 to test the transmitted digital message.
2) Connect the beacon tester to the ELT, per the instructions of the reader.
3) Perform a self-test by placing the control switch in the SELF-TEST position. Once the LED blinks once, release the switch. Example results are shown in Figure 8 Short & Long 406 MHz Message Examples. Actual messages will vary depending on the protocol and information programmed into the ELT.
   a) If the ELT is programmed with a location (long message) protocol and disconnected from the aircraft navigation system or interface device, the message will indicate "Position Invalid" in lieu of position data, as shown in the right hand example.

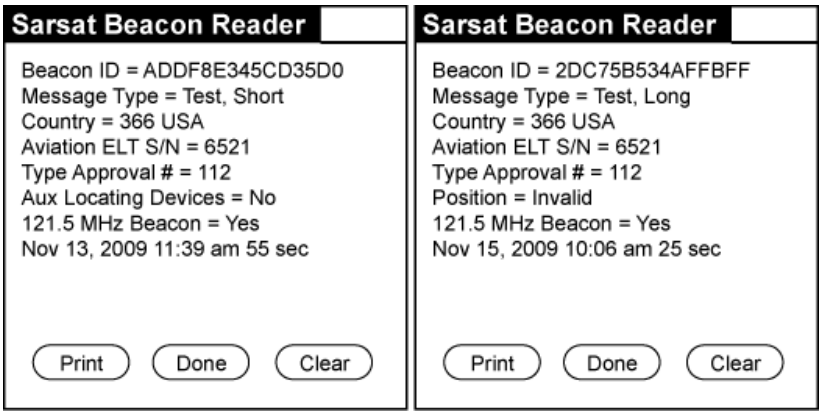

Figure 8 Short & Long 406 MHz Message Examples

N. ELT Reset Check – Item 5h

1) Place the ELT control switch in the "ON" position.
2) Return the switch to the "ARM" position.
3) If the ELT is working properly, the LED will turn off.

O. Installed Transmitter / Antenna Test – Item 6

1) Re-install the ELT in Aircraft.
2) Perform the following functional check within the first 5 minutes after the hour (UTC), as required by AC 43.13-1, Chapter 12, § 12-22, Note 3.
3) Notify any nearby control tower of your intentions.
4) Tune an AM receiver to 121.5 MHz.

NOTE: A low-cost AM radio is suggested for this test, as the aircraft Comm Transceiver is very sensitive and may pick up a weak signal, even if the antenna is disconnected from the ELT. There is no need to activate the beacon to verify 121.5 MHz presence.

5) Locate the radio approximately 20' to 30' from the antenna.
6) Perform a self-test by moving the switch to "TEST", then release (cockpit remote switch to the "TEST" position).
7) Listen for 2 audible sweeps on the receiver, which takes about 1 second.
8) Verify the buzzer sounds upon activation.
9) Note the LED activity on the cockpit remote switch. If the ELT is working properly, the LED will stay on for approximately 1 second and then turn OFF.

NOTE: This test also completes the requirement to check ELT controls by verifying operation of the remote switch.

10) Refer to Table 6 if the LED displays error code flashes.

P. Antenna Test – Item 7

1) Tune a low quality AM receiver (i.e., radio) to 121.5 MHz.

NOTE: The aircraft transceiver is not recommended for this test, because it is too sensitive to verify the integrity of the antenna system and it may pick up a weak signal even if the antenna is disconnected from the ELT. An AM radio provides a better level of confidence for this test.

2) Place the radio approximately six inches from the antenna.
3) Activate the ELT (cockpit remote switch to the "ON" position).

NOTE: Perform this test within the first five minutes after the hour UTC.

4) Listen for 2 audible sweeps on the radio, which takes about 1 second. An audible signal verifies energy is being transmitted by the antenna.
5) Reset the ELT (cockpit remote switch to the ARM position).

Q. Inspection and Test Documentation – Item 8

1) Make an appropriate entry in the aircraft maintenance records (i.e., logbook), including the date the ELT inspection and testing was satisfactorily completed.
2) For aircraft operating under Canadian authority, following satisfactory completion of performance testing, the date on which the test was performed shall be marked on the ELT external casing in a legible and permanent manner.

3. Fault Isolation

A. Self-Test

1) The self-test checks certain critical functions in the beacon. Results of the test are displayed by a series of indications (flash codes), where the local LED, remote switch LED and buzzer(s) activate for ½ second ON, followed by ½ second OFF. Multiple flash codes are separated by periods of 1.0 second. If no errors are present, a 2 second flash is presented as a "system ok" indication. This is suppressed if errors are present.

The self-test also emits a 121.5 MHz 2 cycle burst which can be monitored by an AM radio.

2) There are two methods of performing a self-test – one for a 5-wire remote switch installation and another for the 2-wire, as follows:
   a) 5-Wire Remote Switch (2 position switch):
      1. This procedure is only performed using the 5-wire cockpit remote switch. The switch on the ELT is similar to the 2-wire operation.
      2. Set remote switch to "ON" position for approximately 1 second, then return to "ARMED" position. Error codes will begin to display after approximately 1 second.

NOTE: If the ELT is left activated for longer than 2 seconds, no self-test will be performed on turn off.

b) 2-Wire Remote Switch (3 position switch):

1. Push switch lever to "SELF-TEST" position for approximately 1 second, until LED blinks one time, then release. Error codes will begin to display after about 1 second.
2. Regardless of how long the ELT has been in the active state, no self-test is performed at turn off using the 2-wire switch.

BEEPS & FLASHES	TEST RESULTS	INDICATION
1	System OK	One pulse two seconds long of the local LED, remote light, and buzzer. This pulse is suppressed if problems are found during self-test.
2	Code not used in the ELT 1000	
3	Code not used in the ELT 1000	
4	Low output power	
	Bad load or faulty ELT	1) Terminate antenna cable at antenna connection end w/50Ω load. Repeat self-test. If error clears, proceed to step 3). 2) Terminate ELT output w/50Ω load. Repeat self-test. If error persists, return to factory for servicing – cannot field repair. If error clears, replace antenna cable. 3) Check coax cable and connectors for shorts and opens, bad center pin, etc. Disconnect, then reconnect cable. Repeat self-test. 4) Check antenna ground for low resistance (should be <100 m Ω) 5) Antenna should be 3' away from any vertical metal. 6) Have antenna checked by factory.
5	No position data present (long message protocol only. Error is suppressed for short messages)	
	Aircraft navigation system "OFF"	Turn on navigation system
	Faulty system interface wiring or connections.	Check integrity of wiring and connections
6	G-Switch loop between pins 5 and 12 is not present	
	Jumper open	Verify D-Sub connector jumper is installed by checking for less than 1Ω between pins 5 and 12. Repair as necessary. NOTE: When the installed jumper is removed, **wait at least 60+ seconds** before a test is done to get a G-switch 'open' on the Self-Test (6 flash error)
	Jumper missing	Install G-SW enable jumper between pins 5 and 12 in D-Sub harness connector.
7	Battery Check	
	Battery operating time is > 1 hr	Replace battery pack

BEEPS & FLASHES	TEST RESULTS	INDICATION
	Battery voltage low	Replace battery pack
	Battery memory read-write error	Repeat self-test. Replace battery pack if 7-flash persists.
8	Protocol programming data	
	Missing data such as ELT S/N or aircraft tail number	ELT requires reprogramming w/appropriate data

Table 6 Self-test Error Codes

B. Troubleshooting

SYMPTOM	PROBABLE CAUSE	POSSIBLE SOLUTION
Remote switch LED always on (steady)	Improper wiring	Verify wiring
	Short circuit	Verify integrity of all crimp and solder connections
ELT will not turn off	**Turn ELT "OFF" using local switch – If ELT turns off:**	
	Defective remote switch harness reset circuit wiring	Check wiring continuity and repair as necessary
	Defective remote switch	Replace remote switch
	If ELT does not turn "OFF" using local switch:	
	ELT defective	Remove battery pack to disable ELT and return ELT to factory for servicing
Flash Errors	Please Refer to Table 6 Self-test Error Codes	

Table 7 ELT Troubleshooting Guide

REMOVAL

1. ELT

A. ELT Removal

1) See Figure 9 ELT Removal Sequence.

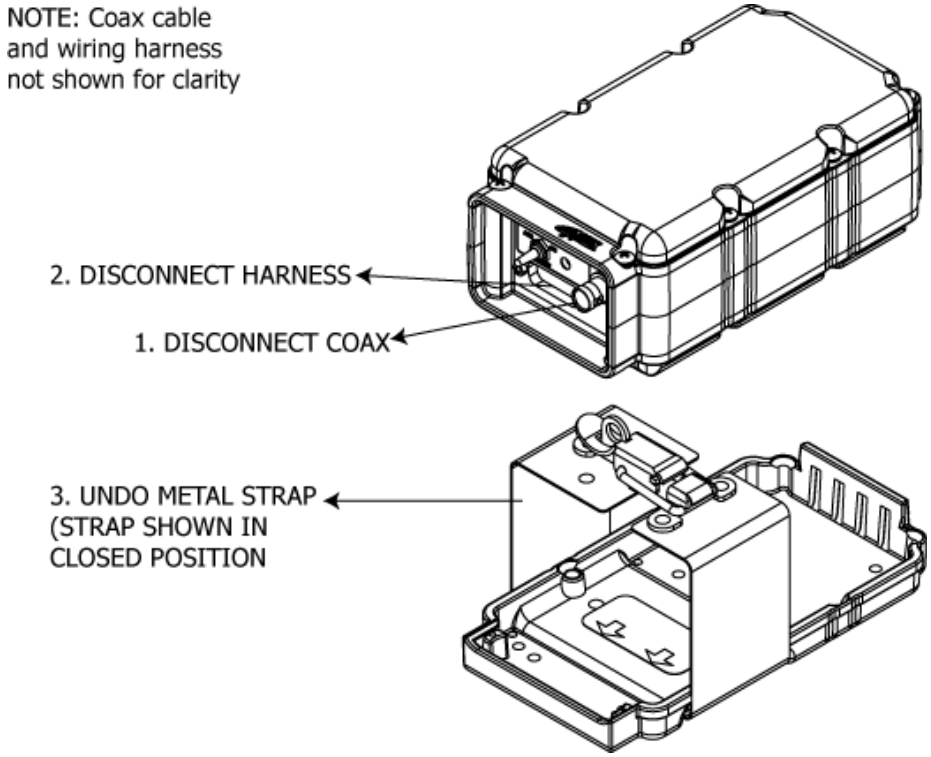

Figure 9 ELT Removal Sequence

2) Disconnect the antenna coax cable.

NOTE: Check the coax cable center conductor pin which is prone to retracting into the connector housing.

3) Remove remote switch harness D-sub plug.
4) Open the metal strap.

NOTE 1: When opening the metal strap, use caution to avoid pinching your fingers in the latch. A flat screwdriver can be placed under the latch to "spring" it open if needed.

NOTE 2: Never open the strap by prying it open from the top. Once the latch is disengaged, loosen the straps from the sides only, as shown by the arrows in Figure 10.

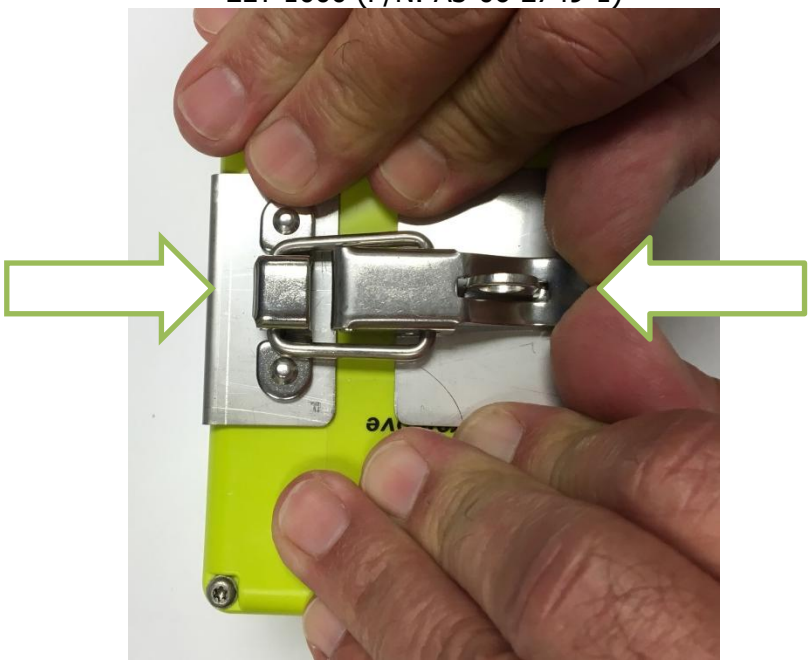

Figure 10 Metal Strap Opening

5) Slide the ELT up and out, and away from the mounting tray.

2. Battery

A. Battery Removal

CAUTION: THE BATTERY PACK CONTAINS ELECTROSTATIC DISCHARGE (ESD) SENSITIVE COMPONENTS AND IT MUST BE HANDLED WITH CARE. IF POSSIBLE, WEAR A GROUNDED WRIST STRAP WHEN HANDLING THE BATTERY PACK DURING INSTALLATION ACTIVITIES. TAKE PARTICULAR CARE TO AVOID TOUCHING THE EXPOSED CIRCUIT BOARD AND CONNECTOR PINS ON THE BOARD.

CAUTION: TAKE CARE NOT TO DAMAGE THE SHORT FLEX CABLE, WHICH CONNECTS THE BATTERY PACK TO THE ELT ASSEMBLY.

1) See Figure 11 Battery Pack Removal.

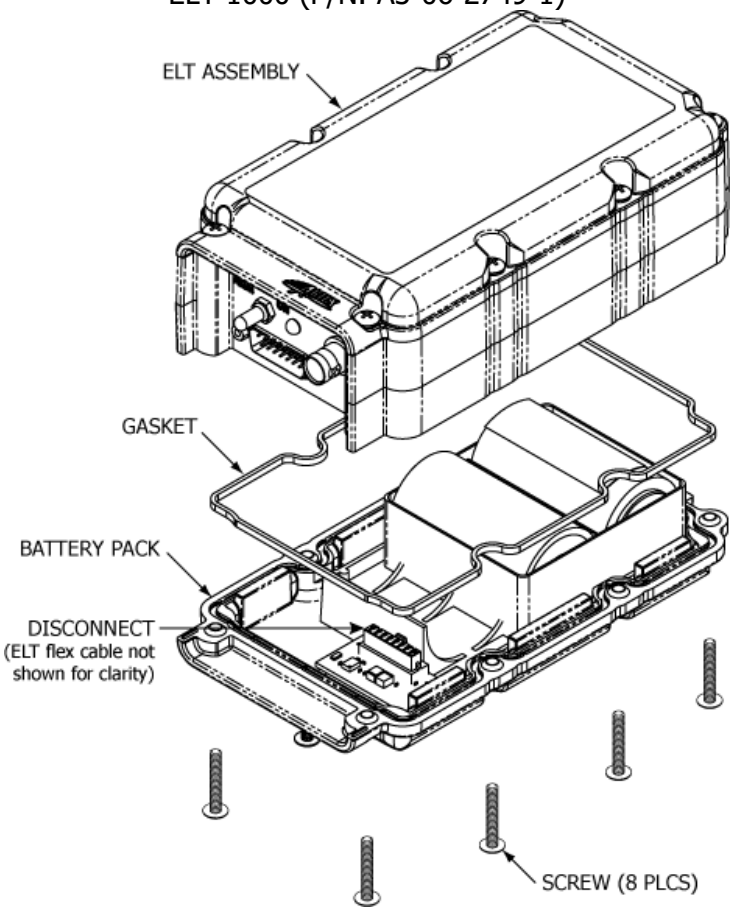

Figure 11 Battery Pack Removal

2) Lay the ELT on a surface with the battery side up, to view the embossed text "BATTERY ACCESS ON THIS SIDE".
3) Remove the eight screws from the battery cover.
4) Lay the ELT on its side, while keeping the ELT and battery pack securely held together.
5) Carefully separate the battery pack from the ELT, taking care not to put strain on the short flex cable.
6) Disconnect the flex cable from the small circuit board mounted in the battery pack by carefully opening the flex cable connector.
7) Dispose of battery within the rules and guidelines of your regional Waste Disposal Authority.

3. Material or Equipment Return

A. Shipment Information

1) If any material or equipment is to be returned to the factory, under warranty or otherwise, ACR Electronics, Inc. must be notified prior to shipment with the following information:
   a) Model and serial number of equipment being returned
   b) Date purchased
   c) Date placed in service
   d) Number of hours in service
   e) Nature and cause of failure
   f) Remarks, if any

B. Return Material Authorization

1) Upon receipt of such notice, ACR Electronics, Inc. will issue a Return Material Authorization (RMA) number which then authorizes return of the material or equipment to the following address:

Repair and Overhaul

ACR Electronics, Inc.

5757 Ravenswood Road

Fort Lauderdale, FL 33312-6645, USA

Phone: (954) 981-3333

Fax: (954) 983-5087

a) Failure to obtain a RMA number and provide the details listed above may cause unnecessary delay and/or rejection of the returned material or equipment.
b) All material or equipment returned to the factory must be freight prepaid.
c) Acceptable methods of shipment for international return are Airborne, Burlington Air, DHL, Emery, Federal Express, UPS International, and World Wide only.

NOTE: Do not use international commercial airlines, such carriers may cause a loss of returned material or equipment.

INSTALLATION

1. Regulatory Requirements and Guidelines

A. For US Registered aircraft:

WARNING: FAILURE TO REGISTER THIS ELT WITH NOAA BEFORE INSTALLATION COULD RESULT IN A MONETARY FORFEITURE BEING ISSUED TO THE OWNER.

1) To enhance protection of life and property, it is mandatory that each 406.0-406.1 MHz ELT be registered with NOAA before installation and that information be kept up-to-date. In addition to the identification plate or label requirements, each 406.0-406.1 MHz ELT is provided on the outside with a clearly discernible permanent plate or label containing the following statement: "The owner of this 406.0-406.1 MHz ELT must register the NOAA identification code contained on this label with the National Oceanic and Atmospheric Administration (NOAA), whose address is:

NOAA/SARSAT Beacon Registration

NSOF E/SPO53

1315 East West Hwy

Silver Spring, MD 20910-3282

2) Aircraft owners must advise NOAA in writing upon change of aircraft or ELT ownership, or any other change in registration information. Fleet operators must notify NOAA upon transfer of ELT to another aircraft outside of the owner's control, or another change in registration information. NOAA will provide registrants with proof of registration and change of registration postcards.

B. TSO C126a, Paragraph D

1) TSO approval of the ELT does not constitute installation approval. All ELT installations are subject to field approval for a given airframe by either an approved FAA DER or FAA FSDO. For installations outside the US, contact your local civil aviation regulatory agency for details.
2) The remote switch is a requirement of TSO C126a and installation is mandatory.
3) The buzzer is a requirement of TSO C126a and installation is mandatory.

C. FAA

1) This manual constitutes supporting data, as described in AC43.9-1, Paragraph 6.h.(2) and AC 43-210, Chapter 2, Paragraph 201(a)(6), and as such may be used as support for FAA field approval of the ELT installation.
2) In addition to the procedures outlined herein and in accordance with FAR Part 43, the installer must adhere to the aircraft manufacturer's instructions and recommendations and the guidelines provided by FAA Advisory Circular AC 43.13-2 "Acceptable Methods, Techniques, and Practices - Aircraft Alterations," specifically Chapters 1 through 3, 11, and 13.
3) By signing the aircraft logbook, and FAA Form 337, the installer is stating the installation has been performed in accordance with current FAR requirements and the procedures outlined therein. The completed Form 337 is provided to the FAA and also becomes a permanent part of the aircraft maintenance records in accordance with AC43-9, Paragraph 17.

D. Canada

1) All installations must be performed in accordance with Canadian Aviation Regulations (CAR) Part V, Chapter 551, § 551.104.

E. Other Countries

1) Installations in aircraft outside of the United States and Canada, must be performed in accordance with applicable regulatory authority rules and regulations.

F. RTCA

1) DO-204A, § 3.1.8 guidelines for mounting an ELT:
   a) The ELT unit shall be mounted to primary aircraft load-carrying structures, such as trusses, bulkheads, longerons, spars, or floor beams (not aircraft skin) or a structure that meets the requirements of the following test:
   b) The mounts shall have a maximum static local deflection no greater than 2.5 mm when a force of 450 newtons (100 lbf) is applied to the mount in the most flexible direction. Deflection measurements shall be made with reference to another part of the aircraft not less than 0.3 meters nor more than 1.0 meters from the mounting location.
2) DO-182, § 6.2.2.b recommends that:
   a) To maximize the probability of the ELT transmitting a detectable signal after a crash, all ELT system components, which must survive a crash intact, e.g. transmitter and external antenna, should be attached to the airframe in such a manner that the attachment system can support a 100 g load, (ELT weight x 100, ELT antenna weight x 100, etc.) applied through the center of gravity of the component (ELT, antenna, etc.) in the plus and minus directions of the three principal axes of the aircraft.
   b) Post-crash critical components of the ELT system, e.g. transmitter and external antenna, should be mounted as close to each other as possible.
   c) The antenna coax cable should not cross any production breaks, e.g., major structure sections, such that the ELT and antenna are in the same section of the aircraft and as close together as possible.
   d) If the ELT and external antenna are on opposite sides of an airframe production break, the components should be secured to each other by a tether that can support a 100 g load (ELT weight x 100). The interconnecting antenna-to-ELT coax cable should have sufficient slack on both ends that it will not be subjected to any tensile load and should be tied loosely to the tether.

2. Mounting Tray

A. Location

CAUTION: MANY ORIGINAL ELT INSTALLATIONS ARE INADEQUATE AS FAR AS UNIT LOCATION AND SURFACE RIGIDITY ARE CONCERNED. BECAUSE OF THE CRITICAL FUNCTION AN ELT PERFORMS, IT IS IMPORTANT THE INSTALLATION FOLLOWS THE INSTRUCTIONS AND RECOMMENDATIONS HEREIN.

CAUTION: THE MOUNTING SURFACE MUST BE EXTREMELY RIGID. MOUNTING AN ELT DIRECTLY TO THE AIRCRAFT SKIN, FOR EXAMPLE, IS UNACCEPTABLE.

CAUTION: AVOID LOCATING THE ELT WHERE IT WILL BE SUBJECTED TO UNPROTECTED EXPOSURE TO HARSH CHEMICAL FLUIDS SUCH AS DEICING COMPOUNDS. THESE TYPES OF CHEMICAL FLUIDS CAN PROMOTE CRACKING AND FRACTURING OF THE ELT MOUNTING FRAME AND HOUSING COMPONENTS BY DEGRADING THE STRUCTURAL INTEGRITY OF THESE COMPONENTS. THESE SAME CHEMICAL AGENTS MAY ALSO CAUSE CORROSION OF ELECTRICAL CONNECTIONS.

NOTE: Statistics show that the tail section of an airplane is likely to be less damaged during a crash; therefore, providing a good mounting environment for the ELT.

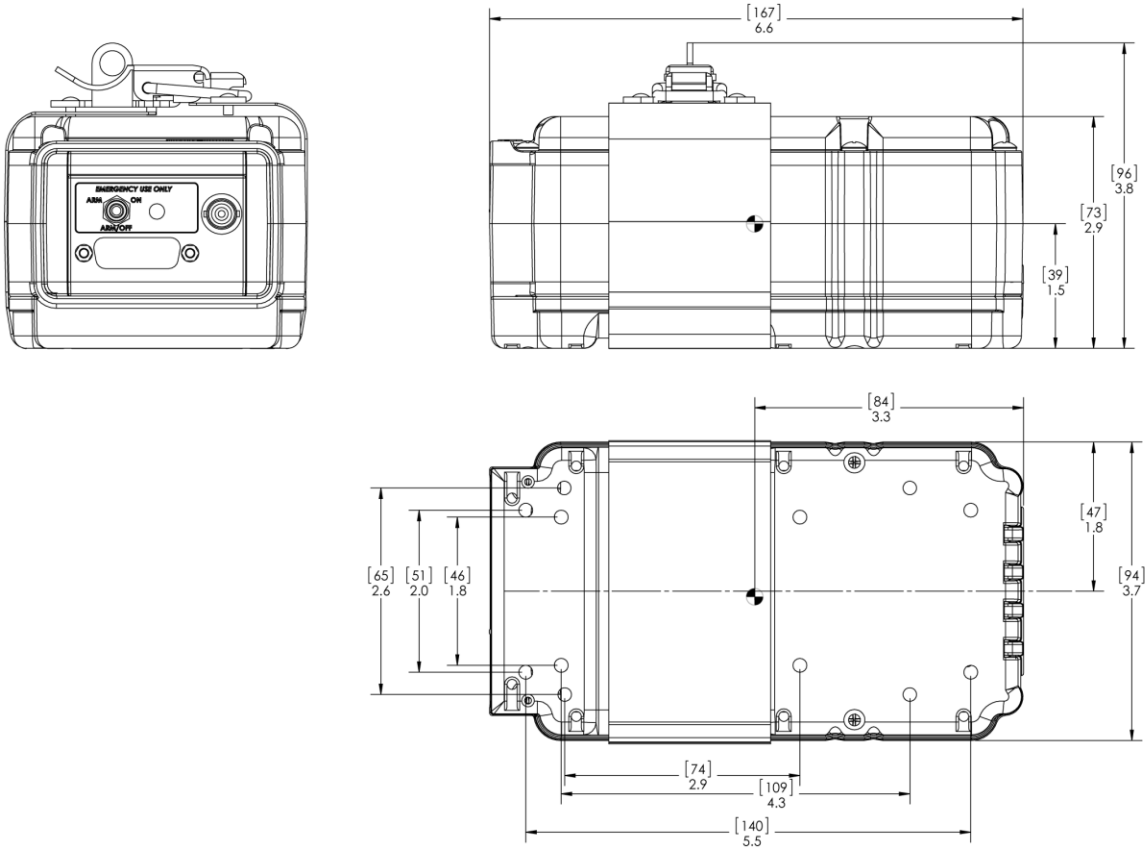

Figure 12 ARTEX ELT 1000 Outline & Dimensions

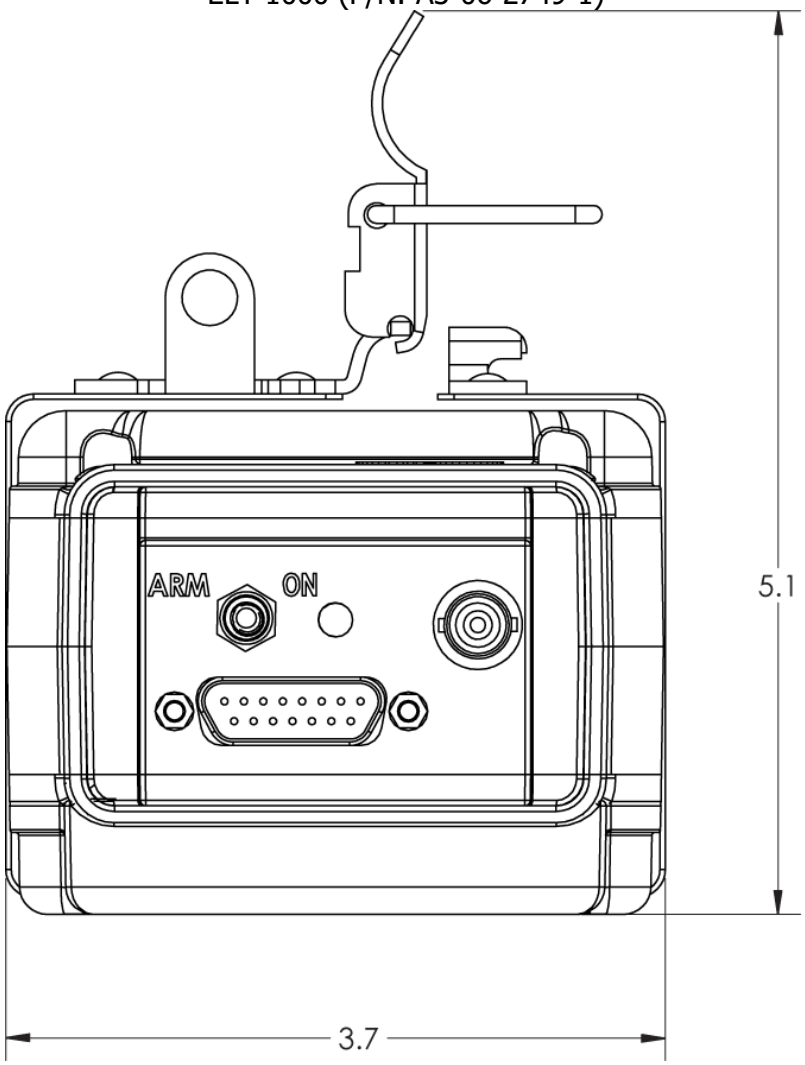

Figure 13 ELT 1000 Metal Strap Minimum Clearance Dimensions

1) Select a suitable location for the ELT mounting tray (see Figure 12 ARTEX ELT 1000 Outline & Dimensions on page 40 and Figure 13 ELT 1000 Metal Strap Minimum Clearance Dimensions above).
2) Mount the ELT as far aft as practical, but where it can be easily retrieved for maintenance.
3) Additional installation guidance may be found in AC 43.13-2, Chapter 2, § 28, which specifically addresses ELT installations.

B. Installation

1) See Figure 14 Typical Mounting Tray Installation.
2) Install the necessary mounting structure as appropriate.
3) Align the mounting tray (A3-06-2758-1) on the mounting structure, such that the arrow on the tray is within 10° of the longitudinal axis of the aircraft and pointing in the direction of flight.
4) Mark and drill the four mounting holes with a #19 or 4.25 mm drill. Refer to Figure 12 on page 40 for the mounting hole pattern.
5) Install the mounting tray as shown in Figure 14 (installation kit: 455-7423).

NOTE: The use of substitute mounting hardware is acceptable provided the hardware used meets or exceeds the strength and corrosion resistance of the original hardware.

6) Torque screws to 12±1 lb-in (136 ±11 N•cm).

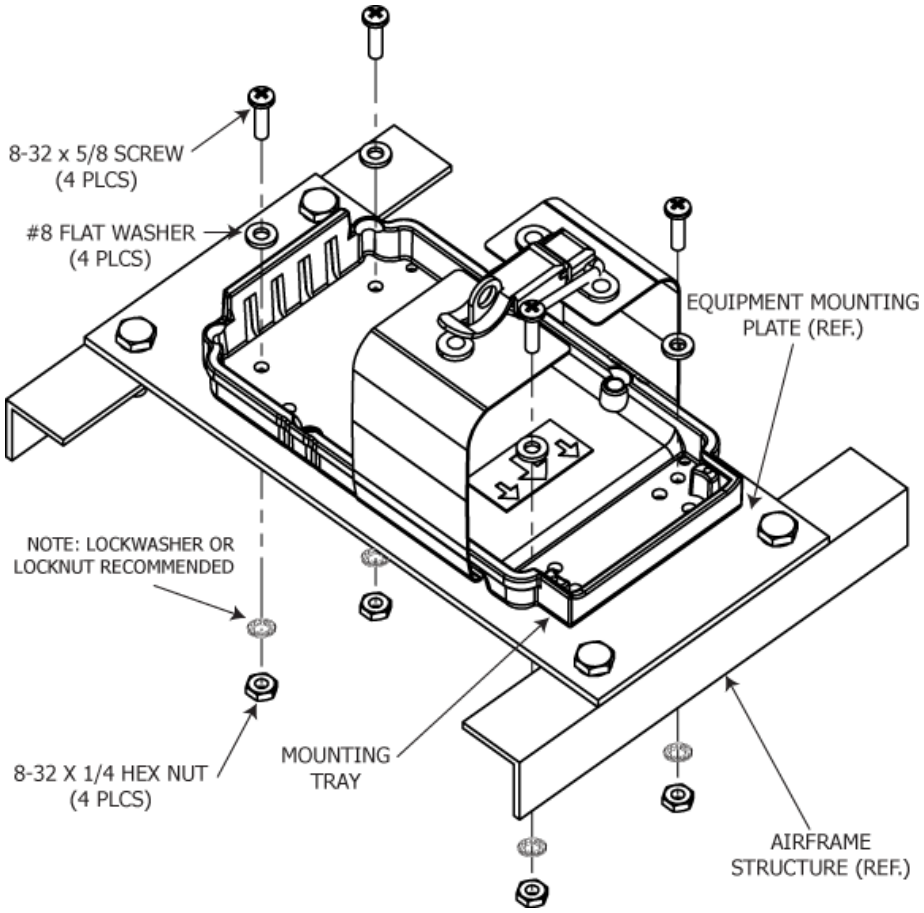

Figure 14 Typical Mounting Tray Installation

3. Antenna

A. General

1) Use only antennas approved for use with the ARTEX ELT 1000. The ELT will not work properly without being connected to an antenna for which it was designed.
2) Verify the antenna selected matches the requirements of the specific installation. Considerations include aircraft maximum rated speed, location restrictions, and any other considerations specific to the installation.
3) Per FAA TSO C126a and ETSO-C126a, ELTs must be installed with only the components that have been certified by either the manufacturer of the unit or via a Type Certificate authorization done by the airframe manufacturer. Contact ARTEX Technical Support for further information regarding component and accessory selection.

B. Location

1) Select a suitable location for the antenna.
   a) Place the antenna in a location where the antenna can be installed vertically and with at least 32 inches (0.8 m) of clearance from other antennas, particularly VHF, in accordance with RTCA/DO-204, § 3.1.10.2.

NOTE: Detailed location guidance may be found in AC 43.13-2, Chapter 3, which recommends a minimum distance of 36 inches (0.9 m) clearance between antennas.

C. Installation General Info

NOTE: Per FAA TSO C126b, "Those installing this article, on or in a specific type or class of aircraft, must determine that the aircraft installation conditions are within the TSO standards. TSO articles must have separate approval for installation in an aircraft."

CAUTION: ARTEX CANNOT VERIFY APPROPRIATE ANTENNA SELECTION PER EACH AIRFRAME. MANY CONSIDERATIONS MUST BE EVALUATED DURING THE ANTENNA SELECTION PROCESS, SUCH AS DYNAMIC / STATIC LOADING. CERTAIN SPECIAL CONSIDERATIONS NEED TO BE ACCOUNTED FOR SUCH AS AIRFLOW SPEED OVER THE ANTENNA SURFACES (FRONTLOAD / SIDELOAD). CONSULT FAA AC 43.13-2 AND AIRFRAME MANUFACTURER FOR ANTENNA INSTALLATION PRACTICES AND REQUIREMENTS. CONTACT ARTEX TECHNICAL SUPPORT FOR MORE INFORMATION.

WARNING: PER FAA AC 43.13-2: "PAINTING AN ANTENNA OR APPLY PROTECTIVE COATINGS OR DEVICES THAT ARE NOT APPROVED ARE NOT ALLOWED [UNDER THIS AC]. PAINT IS AN RF DE-TUNER. IF AN ANTENNA IS PAINTED IN THE FIELD, PAINT TYPE AND PAINT THICKNESS PRESENT UNCONTROLLED VARIABLES THAT WILL AFFECT AN ANTENNA'S PERFORMANCE AND MAY RESULT IN THE ANTENNA NO LONGER MEETING ITS SPECIFICATIONS OR TECHNICAL STANDARD ORDER (TSO)." **ARTEX DOES NOT AUTHORIZE OPERATORS OR OUTSIDE MAINTENANCE ORGANIZATIONS TO PERFORM FIELD REPAIRS OR PAINTING.** CONTACT ARTEX TECHNICAL SUPPORT FOR MORE INFORMATION.

NOTE: Refer to the airframe manufacturer's written instructions and AC 43.13-2, Chapter 3 for antenna installation practices and requirements.

1) Prepare antenna mounting surface to ensure good ground contact.

2) Install a doubler plate if necessary to meet rigidity requirements. A 20 lb (9.1 kg) force applied to the antenna in all directions should not cause an appreciable distortion in the aircraft skin.
3) Install a ground plane if necessary. Composite or wood airframes and fabric covered may require a ground plane.
4) Drill the antenna mounting holes and coax connector hole referring to the appropriate antenna illustration for hole patterns and hole sizes. See Figure 15 below and Figure 16 below and Figure 17 on page 45.
5) Mount the antenna referring to the appropriate antenna illustration for hardware requirements, torque, and other applicable installation requirements.
6) Apply a small fillet of RTV sealant around periphery of antenna base to protect against moisture.
7) A coax cable is provided as part of some ELT kits.

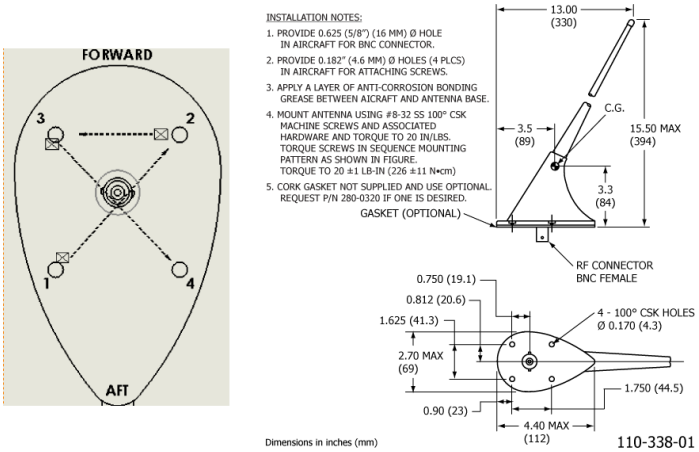

Figure 15 Rod Antenna 110-338, 110-338-01 and A3-06-2835 Outlines and Dimensions

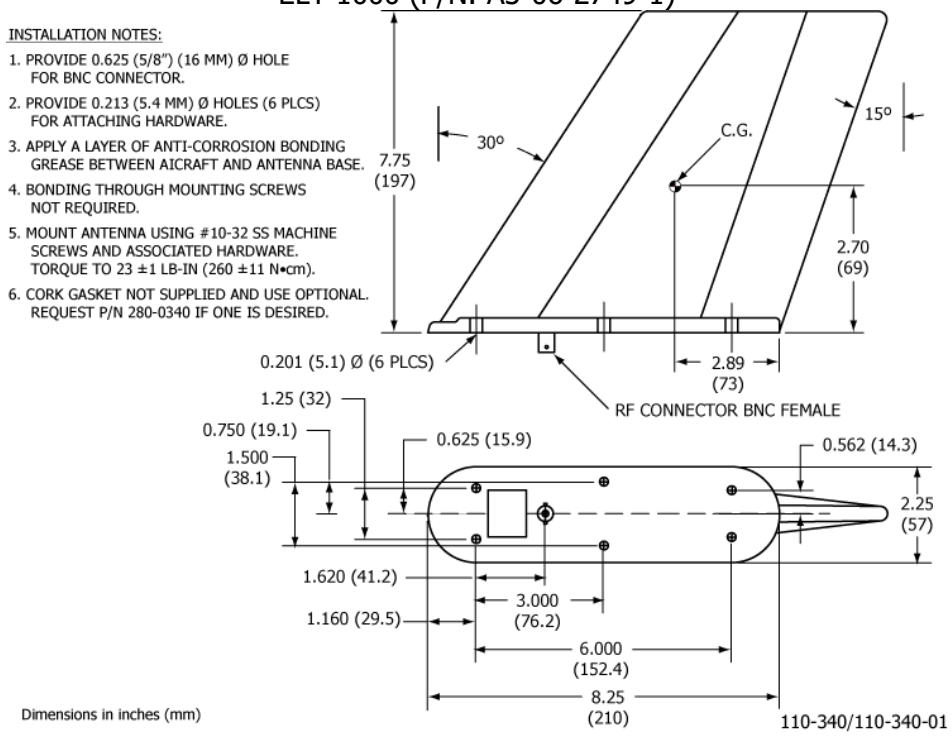

Figure 16 Blade Antenna 110-340 Outlines and Dimensions

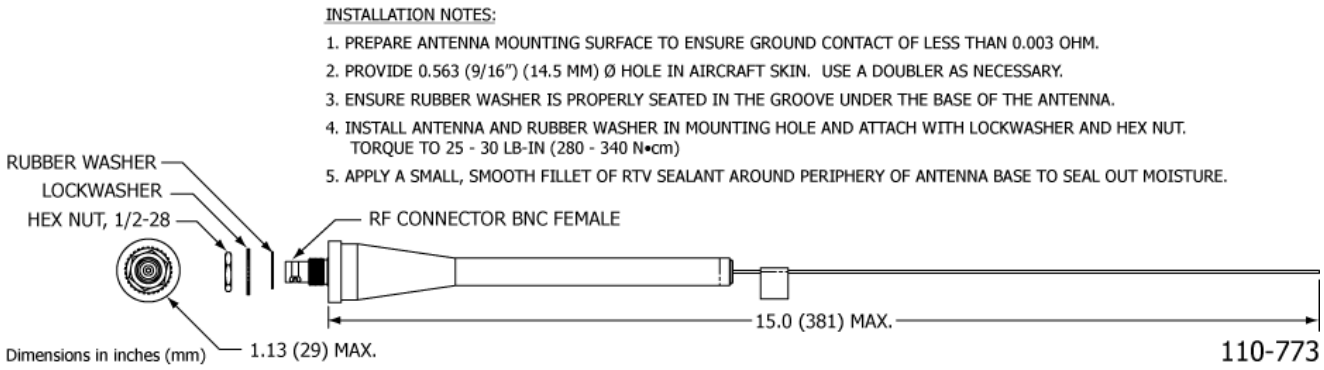

Figure 17 Whip Antenna 110-773 Outline and Dimensions

4. Remote Switch

A. Location

NOTE: The ELT 1000 can be installed using either a 5-wire remote switch, ARTEX P/N 345-6196, or a 2-wire remote switch, ARTEX P/N A3-06-2759. Note that the 2-wire remote switch does not require a connection to the aircraft power to operate.

1) Select a suitable switch location in the cockpit. The switch needs to be visible and accessible, where the pilot can easily reach the switch and notice the indicator LED.

2) The switch assembly requires a panel area of approximately 2.0 x 1.3 in. (51 x 33 mm). Figure 18 shows the dimensions. The clearance behind the panel must allow for the mating connector and harness wires, as well as the switch depth.

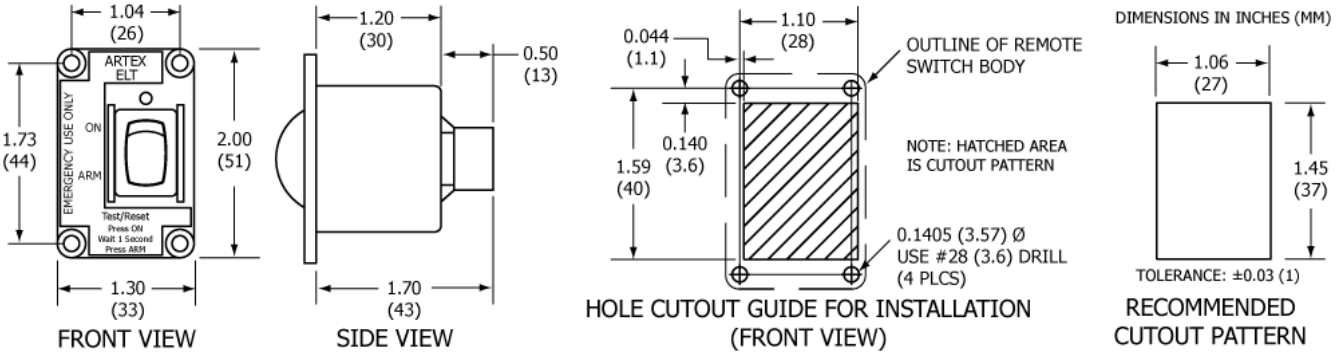

Figure 18 Remote Switch Outline and Dimensions

B. Installation

1) Mark the cutout on the cockpit panel.
2) Fit the switch assembly into the cutout and mark the four screw holes, then remove the switch.
3) Drill the screw holes with a #28 or 3.6 mm drill.
4) Install the switch assembly using the hardware provided in the remote switch installation kit (ARTEX P/N 455-6196).
5) Apply the "For Aviation Emergency Use Only/Unauthorized Use Prohibited" placard (ARTEX P/N 591-0428, provided in the installation kit).
6) A remote switch is a requirement of RTCA DO-204A and TSO C126b.

5. Buzzer

A. Location

CAUTION: PLACING THE BUZZER IN THE COCKPIT IS NOT RECOMMENDED DUE TO THE POTENTIAL FOR DISTRACTION. THE BUZZER PRODUCES A LOUD, SIREN-TYPE SOUND WHEN THE ELT IS ACTIVATED. SINCE THE BUZZER OPERATES IN TANDEM WITH THE COCKPIT LED, IT WOULD ONLY SERVE AS A REDUNDANT WARNING INDICATOR IN THE COCKPIT.

1) Select a suitable location for the buzzer.

NOTE: The buzzer may be located anywhere in the aircraft; however, the recommended location is near the ELT, as the buzzer is loud enough to be heard outside the aircraft when the engine(s) is not running. When the engine(s) is running, the LED on the cockpit remote switch assembly will warn the pilot the ELT is active.

B. Installation

1) Refer to AC 43.13-2 for fabrication and installation guidance.
2) Fabricate a support bracket for the buzzer. See Figure 19 Buzzer Outline and Dimensions.
3) Mount bracket and install buzzer. Either the panel mounting nut or flanges can be used to mount the buzzer.

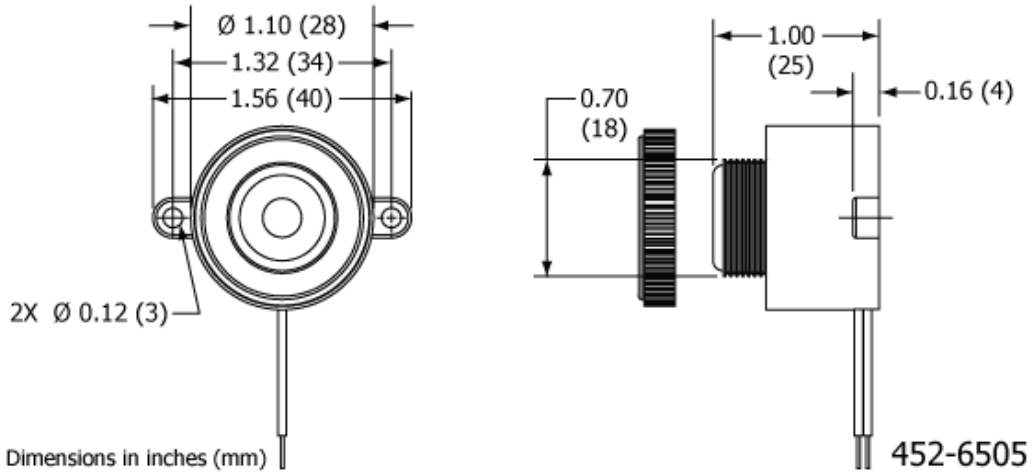

Figure 19 Buzzer Outline and Dimensions

6. Wiring

A. General Considerations and Recommendations

CAUTION: IF GROUND OR OTHER CONNECTIONS ARE BROKEN OR OTHERWISE DAMAGED, THE ELT IS STILL CAPABLE OF AUTOMATIC ACTIVATION; HOWEVER, THE COCKPIT REMOTE SWITCH MAY BE INCAPABLE OF RESETTING THE ELT AND OPERATION MAY NOT BE INDICATED ON THE REMOTE SWITCH LED.

CAUTION: INCORRECT TERMINATION OF THE WIRING IN THE CONNECTORS MAY DAMAGE THE ELT, CAUSE TRANSMISSION ISSUES, OR RESULT IN A NON-FUNCTIONING REMOTE SWITCH. VERIFY THE WIRING AGAINST THE WIRING DIAGRAM AND PERFORM A CONTINUITY CHECK TO CONFIRM GOOD CONNECTIONS AND PROPER PIN LOCATIONS.

CAUTION: TO PREVENT INADVERTENT ELT ACTIVATION OR POSSIBLE COMPONENT DAMAGE, DO NOT CONNECT THE HARNESS TO THE ELT OR COCKPIT REMOTE SWITCH UNTIL ALL POWER AND GROUND WIRING CONNECTIONS ARE COMPLETED AND VERIFIED.

1) The following wiring and grounding considerations and recommendations are applicable:
   a) Minimum 22 AWG wire size.
   b) Shielding is recommended to help prevent EMI and RF interference.
   c) Use high quality conductor meeting MIL-W-16878, M22759, M27500, or a commercial equivalent acceptable for use in aircraft applications.
   d) Provide a "Drip Loop" in the remote switch harness connection to the ELT to divert moisture from the connector.
   e) Provide a "Service Loop" in the remote switch harness connection to the remote switch assembly, such that the assembly can be withdrawn from the panel far enough to easily disconnect the harness plug.
   f) For 5-wire remote switch installations, ELT and remote switch grounds must be common to aircraft ground and should be less than 10Ω.
2) Refer to the following schematics for suggested installation wiring.

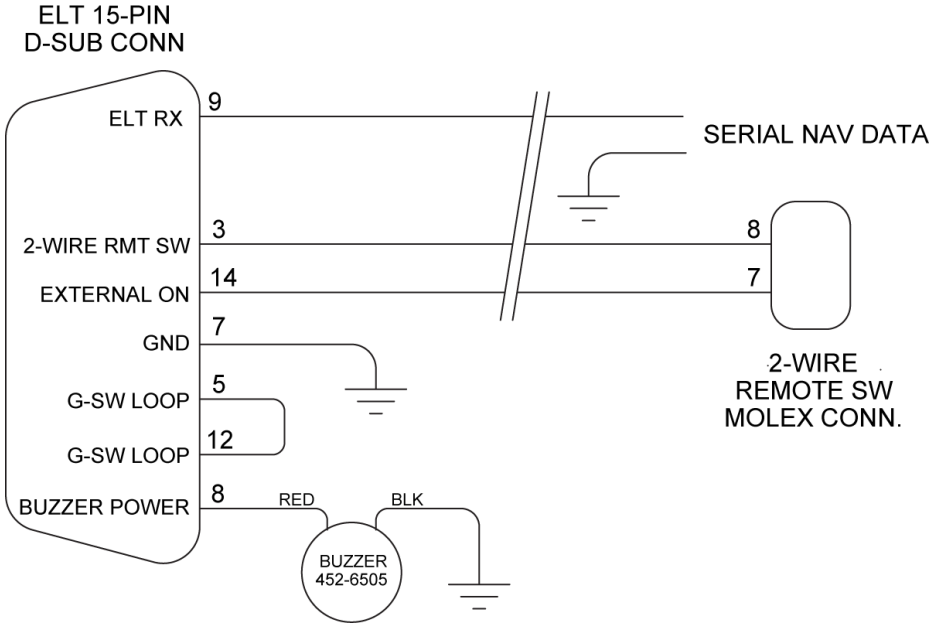

Figure 20 Typical 2-Wire Installation for Unshielded Harness

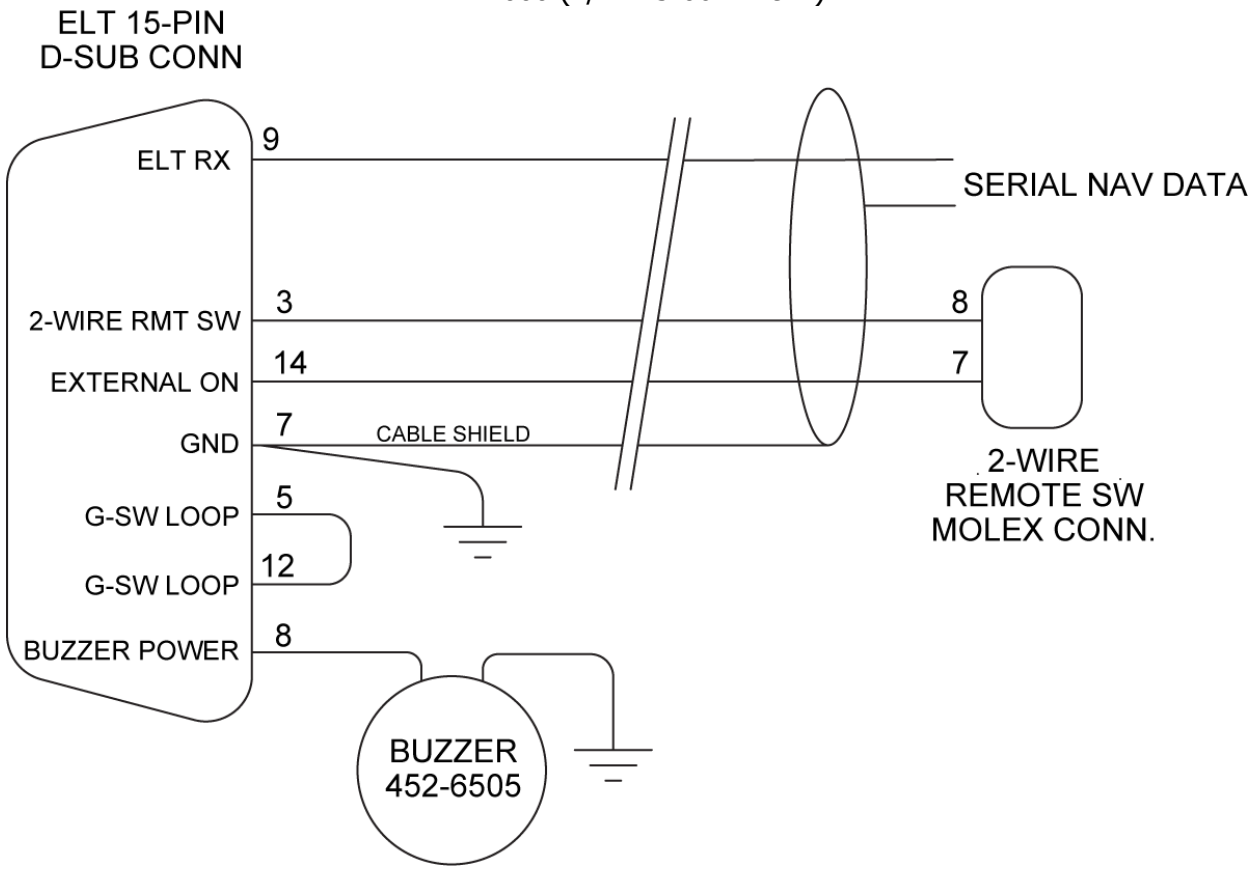

Figure 21 Typical 2-Wire Installation for Shielded Harness

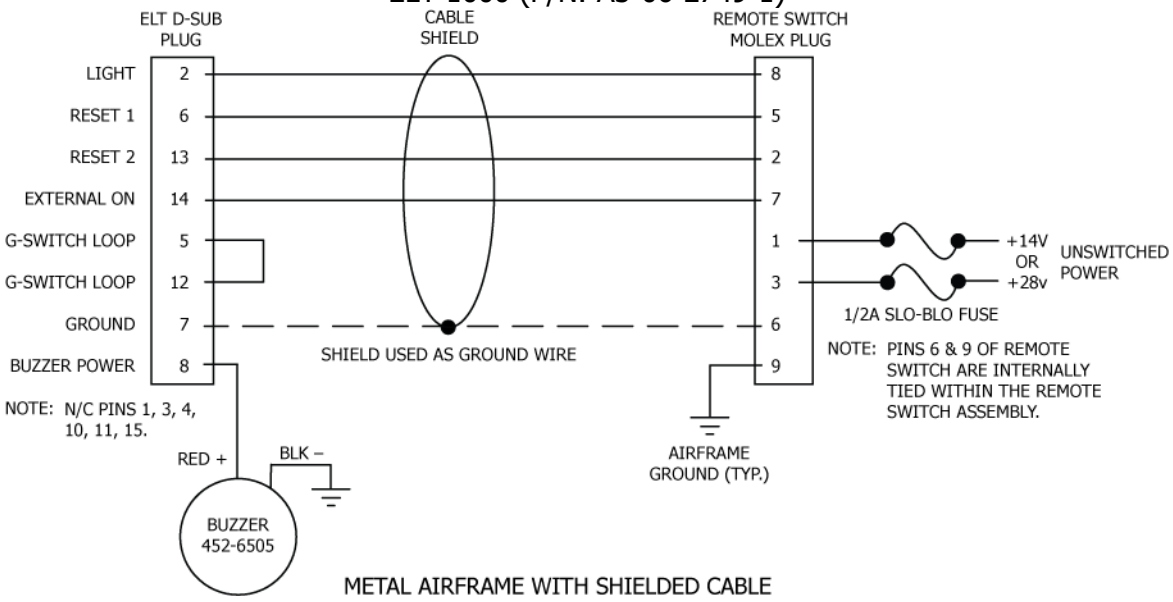

METAL AIRFRAME WITH SHIELDED CABLE

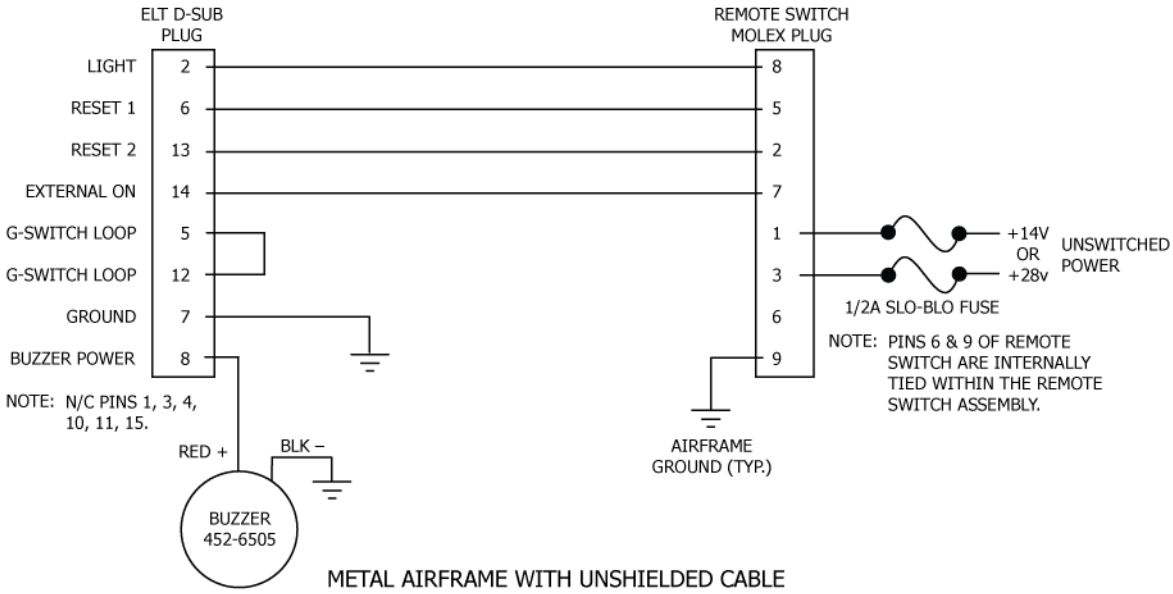

METAL AIRFRAME WITH UNSHIELDED CABLE

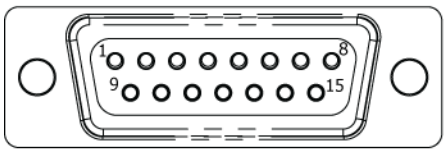

SOLDER CUP (BACK) SIDE OF D-SUB PLUG FOR ELT. HOLE NUMBERING IS IDENTICAL TO THAT INSCRIBED ON ACTUAL PLUG.

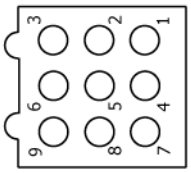

PIN INSERTION END OF MOLEX PLUG FOR REMOTE SWITCH ASSEMBLY. HOLE NUMBERING IS IDENTICAL TO THAT INSCRIBED ON ACTUAL PLUG. ORIENTATION SHOWN IS SAME AS INSERTION ORIENTATION FOR INSTALLED SWITCH.

Figure 22 Typical 5-Wire Installations for Metal Airframes

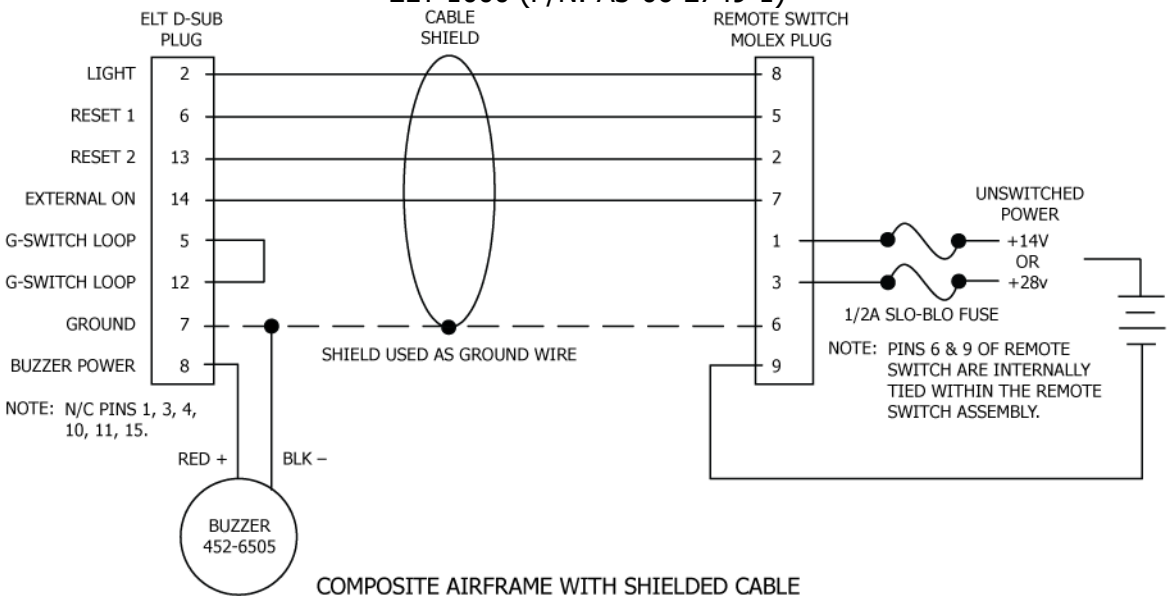

COMPOSITE AIRFRAME WITH SHIELDED CABLE

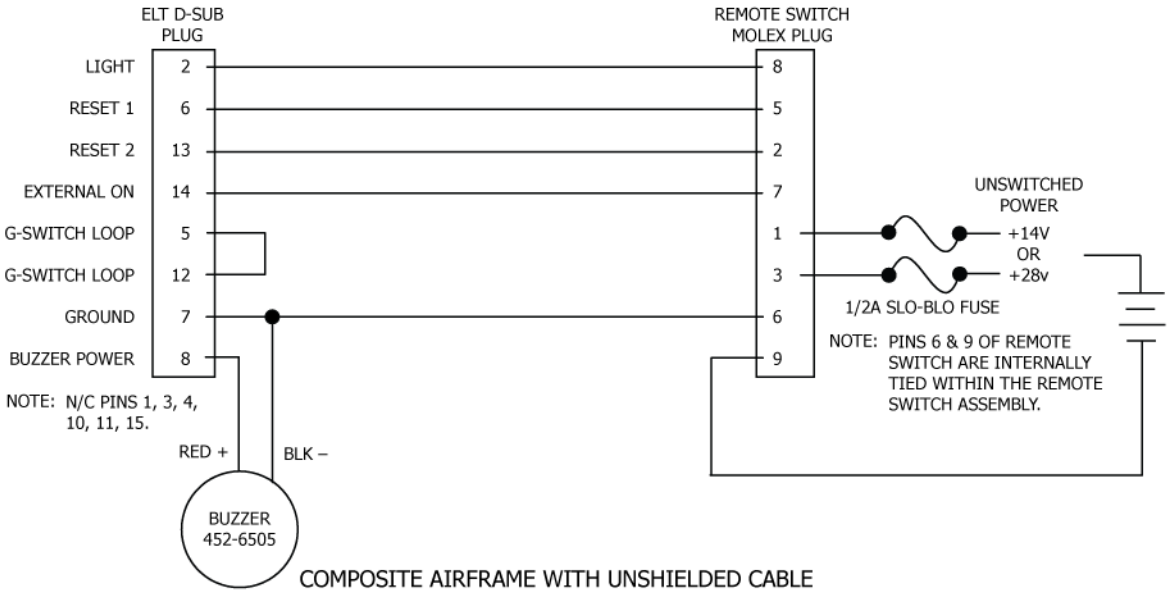

COMPOSITE AIRFRAME WITH UNSHIELDED CABLE

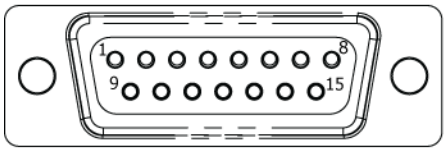

SOLDER CUP (BACK) SIDE OF D-SUB PLUG FOR ELT. HOLE NUMBERING IS IDENTICAL TO THAT INSCRIBED ON ACTUAL PLUG.

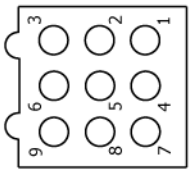

PIN INSERTION END OF MOLEX PLUG FOR REMOTE SWITCH ASSEMBLY. HOLE NUMBERING IS IDENTICAL TO THAT INSCRIBED ON ACTUAL PLUG. ORIENTATION SHOWN IS SAME AS INSERTION ORIENTATION FOR INSTALLED SWITCH.

Figure 23 Typical 5-Wire Installations for Composite Airframes

B. Remote Switch Harness Fabrication

1) See Figure 24 Remote Switch Harness Arrangement.
2) Allow enough slack to provide a drip loop at the ELT end and a service loop at the cockpit remote switch end. Refer to the appropriate wiring diagram.
3) Strip approximately 0.15 in. (3 mm) of insulation from the remote switch end of each of the harness cable wires. Dress and tin the bare wires to prevent the strands from fraying during terminal crimping operations.
4) Support for the harness wiring can be referenced in AC 43.13-1, Chapter 11, § 9 through 12.
5) Install the buzzer connecting wires.

NOTE: The buzzer ground and the ELT ground must be common. The buzzer ground can be connected directly to the ELT D-sub ground.

6) For 5-wire remote switch installations, the power wire may be spliced to an unswitched power source as described in AC 43.13-1, Paragraph 11-167.
7) Crimp female terminal pins (151-6628) to the cockpit remote switch end using Molex crimp tool 63811-3300, or an equivalent tool for 0.062 in. terminal pins.

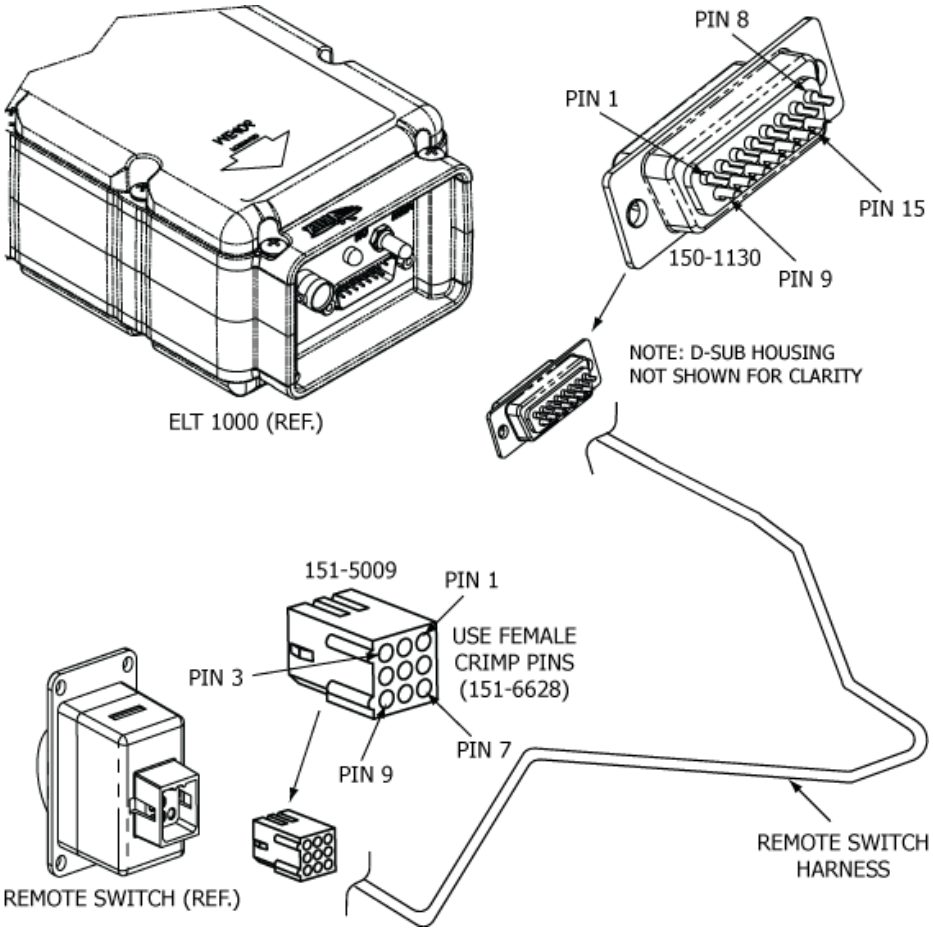

Figure 24 Remote Switch Harness Arrangement

C. ELT D-Sub Plug Installation

1) See Figure 25 Harness Plug Assembly.
2) Select a rubber grommet, supplied as part of the D-Sub housing kit (150-1127), that fits snugly around the harness wiring.
3) Feed the wiring harness, ground wire, and buzzer power wire through the grommet, such that the raised collar end of the grommet is positioned toward the connector end of the harness.
4) Slide the grommet away from the cable and other conductor ends, such that it does not interfere with soldering the conductors to the plug (150-1130).
5) Buzzer ground conductor may be soldered to the cable shield or ground pin for composite airframe installations (see Figure 21 Typical 2-Wire Installation for Shielded Harness on page 49 & Figure 23 Typical 5-Wire Installations for Composite Airframes on page 51 for composite airframe wiring diagrams).
6) Solder a short jumper wire (G-switch loop) between pins 5 and 12 of the harness connector

CAUTION: THE ELT WILL NOT AUTOMATICALLY ACTIVATE IF THE JUMPER G-SW LOOP) IS NOT PROPERLY INSTALLED IN THE ELT D-SUB CONNECTOR.

7) Note the pin locations of the harness D-sub connector plug and solder the harness wires in place, referring to the appropriate wiring diagram.
8) Fit the plug into one of the housing halves, positioning the grommet such that it fits into the recess on the cable end of the housing.
9) Install the bracket washers onto the thumbscrews.
10) Insert thumbscrews into lower housing half.
11) Fit the other housing half into place.
12) Screw housing halves together using the screws and nuts supplied as part of the housing kit.

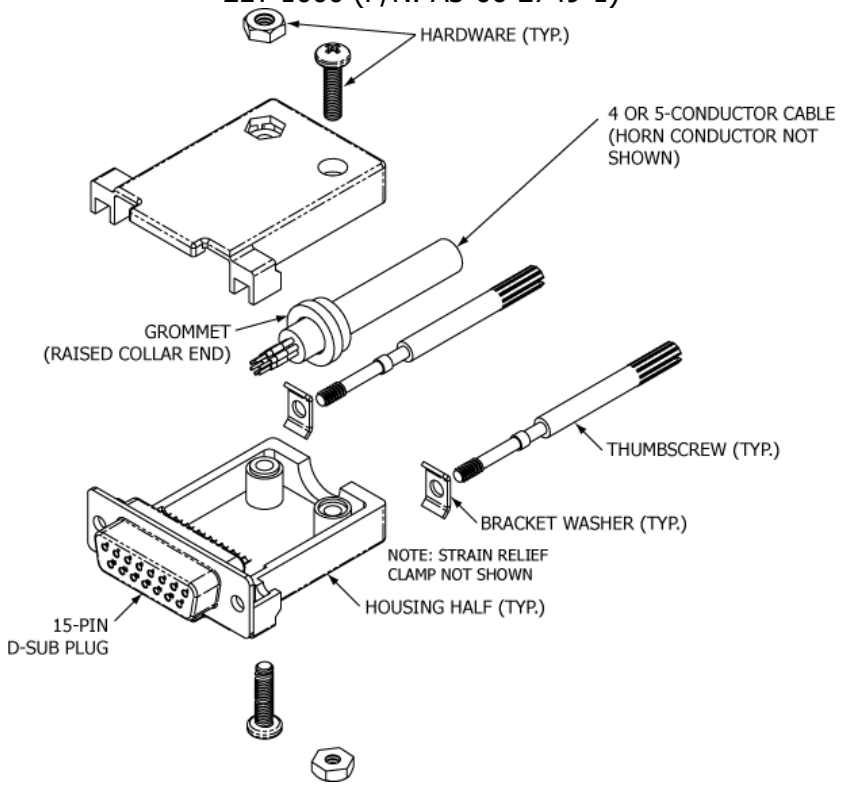

Figure 25 Harness Plug Assembly

D. Cockpit Remote Switch 9-Pin Plug Installation

1) Insert the wiring pins into the Molex 9-pin cockpit remote switch plug. Refer to Figure 20 Typical 2-Wire Installation for Unshielded Harness on page 48, Figure 21 Typical 2-Wire Installation for Shielded Harness on page 49, Figure 22 Typical 5-Wire Installations for Metal Airframes on page 50, and Figure 23 Typical 5-Wire Installations for Composite Airframes on page 51.

NOTE: Terminal pins may be removed from the plug using Molex extraction tool 11030002 or equivalent.

E. Antenna Connection

1) Install the coax cable to the antenna. A custom length coax cable, up to 20 feet (6 m), may be fabricated if the cable provided is not adequate. ACR suggests using RG-142 or RG-400 coax cable.

F. Cockpit Remote Switch Power Connection

1) For 5-wire remote switch installations, connect the appropriate (14V or 28V) remote switch power wire to the battery using a 1/2 Amp in-line, slow-blow fuse or circuit breaker; or an alternate un-switched source (e.g., aircraft clock circuitry). Splicing guidelines can be found in AC 43.13-1, § 13.

NOTE: The power source is required only for the remote switch LED and has no effect on switch functions. The switch will control the ELT with or without power.

G. Airframe Ground Connections

1) Connect the ground wires to the airframe as described in AC 43.13-1, Chapter 11, § 15, as applicable.

H. ELT Programming

NOTE: Programming is performed by customer if so equipped or through a programming sheet supplied to ACR Electronics, Inc. with an ELT order. For information on ELT programmers and training, please contact ACR Electronics, Inc.

1) ELTs that are serialized with LONG Cospas-Sarsat protocol will receive external navigation data if available.
2) ELTs programmed with SHORT Cospas-Sarsat protocol will not accept navigation data.
3) When the ELT 1000 is programmed with 4800 baud it will only accept NMEA, and when programmed with 9600 baud it will only accept Aviation Protocol.

I. RS-232 Acceptable Nav Data

1) NMEA 0183 baud rate is 4800.
2) Aviation protocol baud rate is 9600.
3) Programing of the ELT 1000 will determine the input of 4800 baud NMEA navigation data or 9600 baud Aviation protocol navigation data.
4) The ELT 1000 will parse GGA, GLL and RMC simultaneously. Output configurations that write GGA, GLL and RMC sentences at 4800 NMEA 0183 baud will be suitable
5) GPGGA is recommended if available.

7. ELT Installation and Test

A. Installation

1) See Figure 26 ELT Installation Sequence.

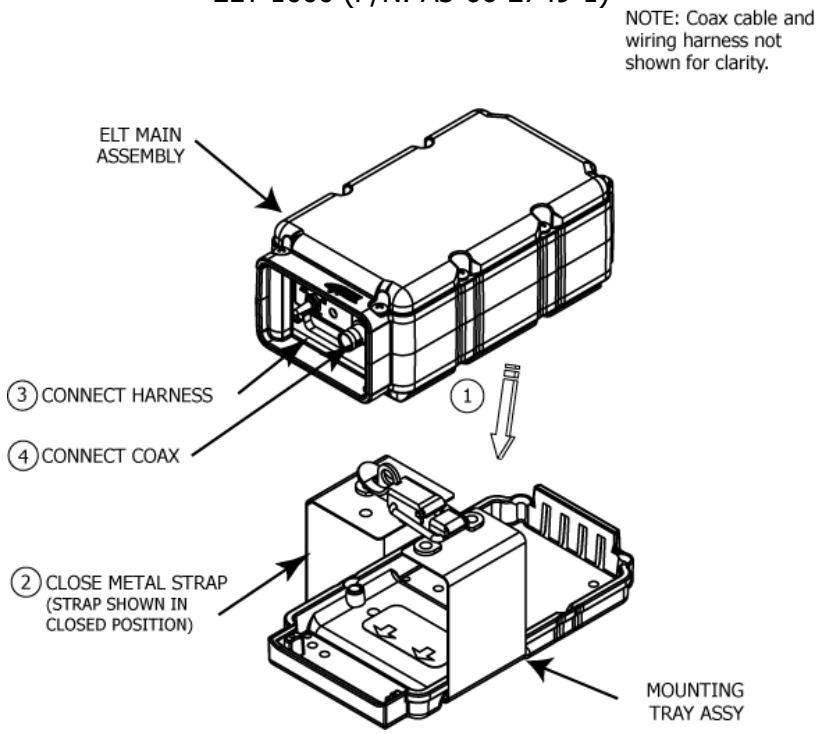

Figure 26 ELT Installation Sequence

2) Insert the ELT into the mounting tray at an angle, engaging the locking ears at the tail end first. Press the ELT down until it is fully seated in the mounting tray.
3) Lock the Mounting Tray Latch in place to secure the ELT body.

NOTE: When locking the latch in place, press firmly on the sides of the bracket strap as shown by the arrows in Figure 27 to keep it snugly in place while closing the latch.

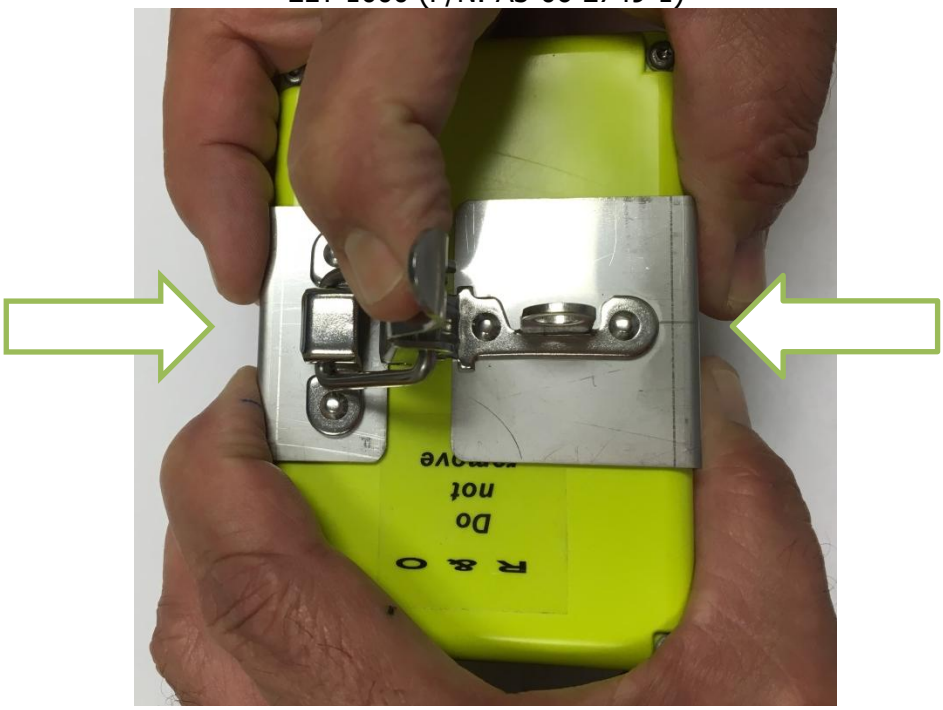

Figure 27 Metal Strap Closing

4) Install two sealant strips (850-0814) into the receptacle of the ELT. Peel the adhesive backing from the strips and stack one on top of the other. Push the pins through the strips.
5) Connect the harness to the ELT, taking care to insert the connector straight in. Secure the connector with the thumbscrews.

NOTE: Care must be taken in the cable connection process to avoid shorting any pins to ground or each other. Under some circumstances, the shorting or grounding of the pins signal the ELT as if the remote switch was activated. This may result in ELT transmissions or setting the ELT into a monitoring condition.

This may result in the ELT exhibiting battery runtime in excess of regulations. To avert this condition, after the harness connection is complete the installer shall activate the self-test on the installed unit. This action will need to be performed whenever the harness is disconnected and then re-connected.

6) Connect the antenna coax cable to the ELT.
7) Test the ELT installation in accordance with the requirements of Table 5 on page 25. Verify digital message (406 MHz burst) per procedures in Table 5 on page 25.

B. Harness ELT D-Sub Plug Sealing

1) After system operation is verified, with no errors displayed, it is suggested that the harness connector to the ELT be sealed against moisture. This is best accomplished by encapsulating the exposed connections in silicone sealant. ACR recommends Dow Corning® 4 Electrical Insulating Compound or an equivalent meeting SAE AS-8660 (MIL-S8660C)

a) Disconnect the remote switch harness D-Sub plug from the ELT.
b) Separate the D-Sub housing halves.
c) Inject sealant into the back side of the plug, so that sealant surrounds all exposed electrical connections and the back of the plug.
d) Reinstall the housing halves.
e) Coat the mating pins/receptacles lightly with sealant.
f) Re-connect the harness plug to the ELT.

C. Installation Documentation

1) Update logbook (aircraft records) entries and submit FAA Form 337, along with any supporting data required by the FAA for approval of the installation, as applicable.
2) In countries other than the United States, make appropriate aircraft records entries and submit documentation as required for installation approval in accordance with national regulatory authorities.

8. Battery Pack Installation

A. Battery Installation and Reinstallation

CAUTION: THE BATTERY PACK CONTAINS ELECTROSTATIC DISCHARGE SENSITIVE (ESD) COMPONENTS AND, AS SUCH, MUST BE HANDLED WITH CARE. IF POSSIBLE, WEAR A GROUNDED WRIST STRAP WHEN HANDLING THE BATTERY PACK DURING INSTALLATION ACTIVITIES. TAKE PARTICULAR CARE TO AVOID TOUCHING THE EXPOSED CIRCUIT BOARD AND CONNECTOR PINS ON THE BOARD.

1) This subtask applies to reinstallation of an existing battery that was removed for inspection and testing, as well as fitting a new battery.
2) See Figure 28 Battery Pack Installation.

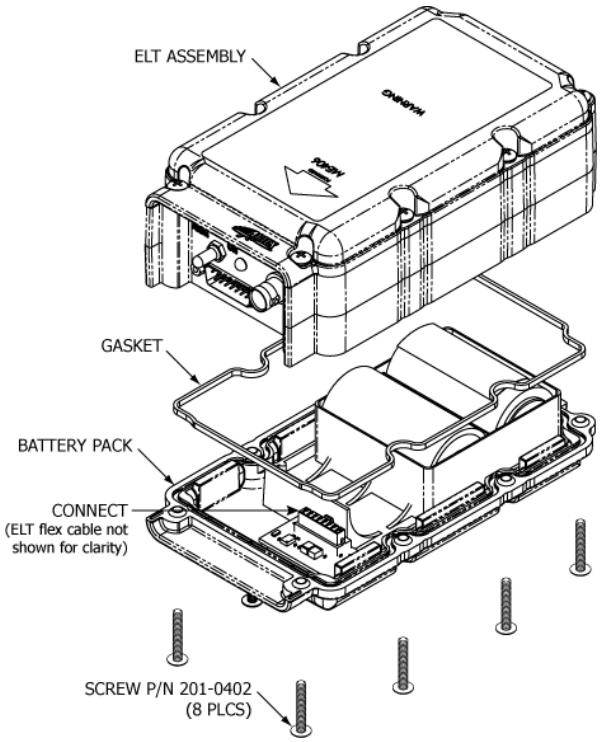

Figure 28 Battery Pack Installation

3) Verify the gasket is in place and in good condition. Note that the gasket fits only one way in the groove.

4) Lay the battery pack on the work surface with the cells facing up.
5) Align the ELT with the battery pack, holding it slightly above the pack with one hand.
6) Connect the ELT flex cable receptacle to the plug on the battery pack circuit board using the other hand, taking care not to put a twist in the flex cable.

NOTE: The receptacle should "click" into place when properly mated to the plug. If the ELT activates when power is connected, reset by toggling the ELT local control switch to "ON" and back to "ARM" after 1-2 seconds.

7) Fit the battery pack into place on the ELT, making sure the gasket is positioned correctly.
8) Turn the battery pack and ELT over to install the screws, while securely holding the ELT and battery pack together.
9) Install the eight battery pack retaining screws and tighten until the ELT is snug against the gasket.
10) Torque the screws to 10-12 lb-in (113-136 N•cm).
11) Perform a self-test to verify operation.

ILLUSTRATED PARTS LIST

1. Introduction

A. Purpose

1) This illustrated parts list (IPL) illustrates and lists the spare parts, with attaching hardware, applicable to the ELT 1000.
2) Parts and components not listed herein, are not field replaceable and ELT repairs requiring parts outside the scope of this manual must be accomplished by the manufacturer.

B. IPL Usage Guide

1) If the part number is not known:
   a) Find the part in the IPL Figure illustration.
   b) Note the item number assigned to the part.
   c) Refer to the associated parts list and find the item number in the "Fig # & Item" column.
2) If the part number is known:
   a) Refer to the parts list and find the part in the "Part #" column.
   b) Note the figure number and item number assigned to the part.
   c) Refer to the illustration in the applicable IPL figure to find attaching hardware and related assembly parts.
3) In cases where multiple item numbers are shown on an illustration for the same item, there is more than one part number option associated with that item.

2. Manufacturer Name and Address

A. Ordering Information

1) Parts may be ordered from ACR Electronics, Inc., or any authorized dealer.

CONTACT INFORMATION:

Sales, ACR Electronics, Inc. / ARTEX Products

5757 Ravenswood Rd

Fort Lauderdale, FL 33312-6645 USA

Phone: (954) 981-3333

Fax: (954) 983-5087

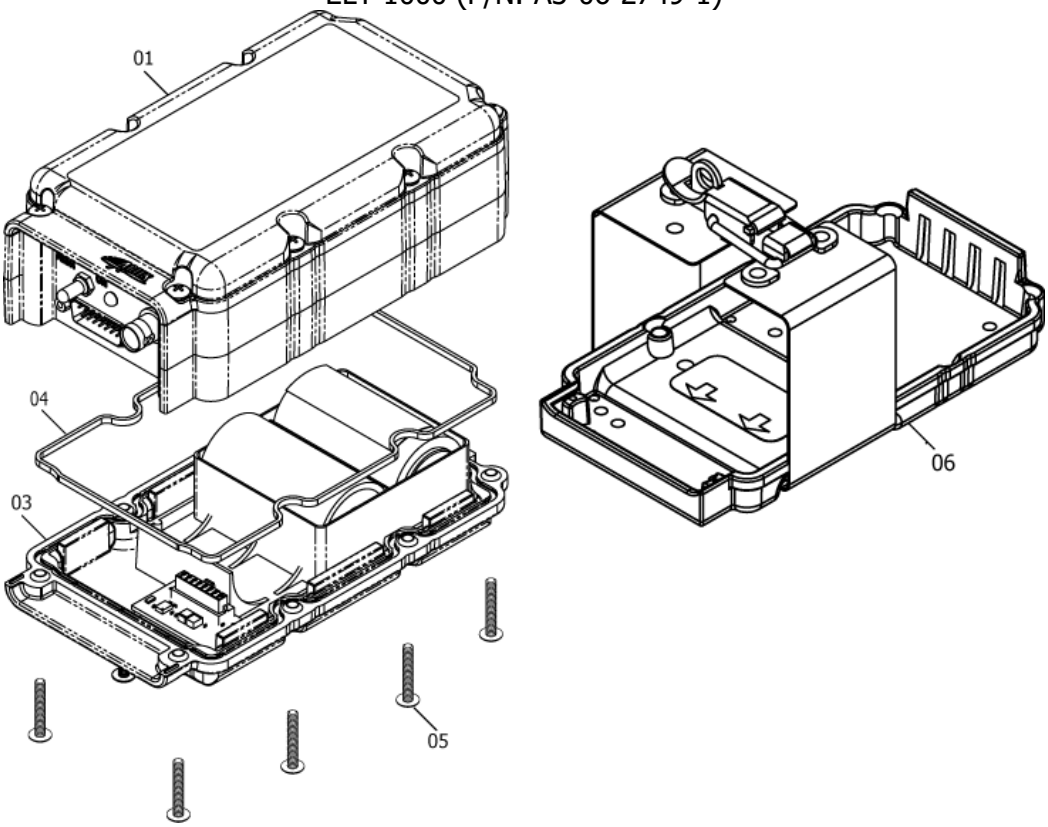

Figure 29 ELT 1000 Main Assembly and Installation

ITEM	PART #	DESCRIPTION	QTY
-	A3-06-2749-1	ARTEX ELT 1000 Final Assembly	1
01	A3-06-2748-1	ARTEX ELT 1000 Main Assembly	1
03	452-6504-1	Lithium Battery Pack	1
04	183-0050	Gasket, 0.093 x 0.055	1
05	201-0402	Screw, 6-32 x 7/8, PHL, Truss, SS	8
06	A3-06-2758-1	Mounting Tray	1
-	201-0810	Screw, PHL, 8-32 x 5/8”, SS	4
-	246-0008	Washer, Flat, ½”, SS, #8	4
-	241-0832	Nut, Hex, 8-32 x ¼”, SS	4
-	A1-20-1671	Label, LiSO2, ARTEX ELT 1000	1

Table 8 Main Assembly Components

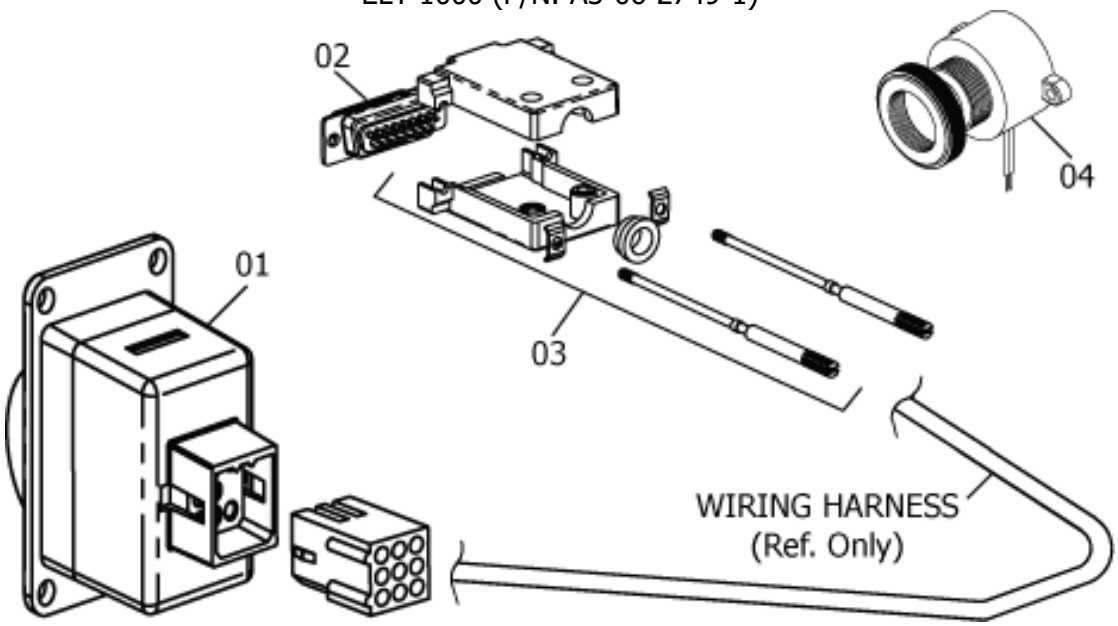

Figure 30 Harness Components

ITEM	PART #	DESCRIPTION	QTY
01	A3-06-2759	Switch, cockpit remote	1
-	201-0408	Screw, PHL, 4-40 x ¼", SS	4
-	247-0400	Washer, internal lock, SS, #4	4
-	241-0440	Nut, 4-40 x ¼", hex, SS	4
-	591-0428	Label, ELT Cautionary Use Advisory	1
-	151-5009	Plug, 9-pin	1
-	151-6628	Terminal, crimp, female, 0.062" dia.	4
02	150-1130	Conn, D-sub, 15-pin, Female, Solder cups	1
03	150-1127	Housing, D-sub, 15-pin, grommet, thumbscrews	1
-	850-0814	Sealant strip, D-sub connector	2
	201-0810	Screw, PHP 8-32 x 5/8, SS	4
	241-0832	Nut	4
	246-0008	Washer	4
04	452-6505	Buzzer (ELT audio alert)	1

Table 9 Harness Components

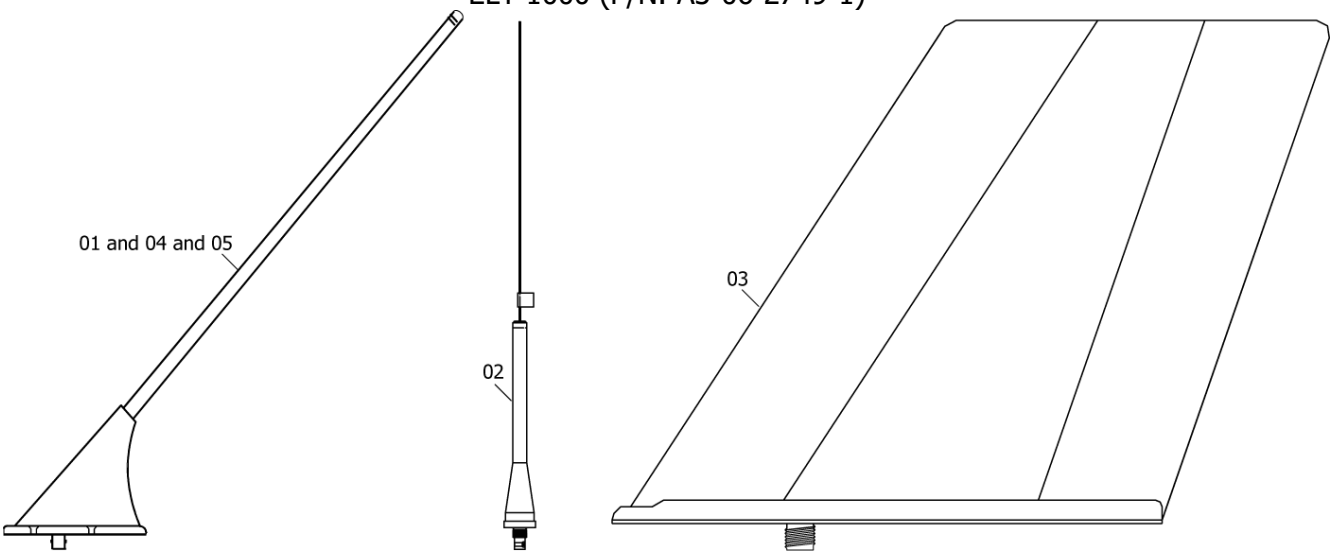

Figure 31 Antennas

ITEM	PART #	DESCRIPTION	QTY
01	110-338-01	Antenna, Rod, CI317-1 (black single input)	1
02	110-773	Antenna, 121.5/406 MHz, whip	1
03	110-340	Antenna, Blade	1
04	A3-06-2835	Antenna, Rod, CI315-1 (white single input)	1
05	110-338	Antenna, Rod, CI317-1 (white single input)	1
-	611-6013-04	Cable, coax, BNC to BNC, 6’	1
-	611-6013-13	Cable, coax, BNC to BNC, 12’	1

Table 10 Antennas

APPENDIX A – ELT REGISTRATION

1. Background Information

A. Hex ID Code (15-Hex ID)

1) A Hexadecimal Identification (Hex ID) is a series of digits consisting of letters A-F and numbers 0-9 that identifies an individual beacon.
2) The Hex ID is a message that is programmed into the beacon and is transmitted when the beacon is activated and allowed to operate for about 50 seconds, or longer.
3) The 15 digit version of the Hex ID (15-Hex ID) is labeled on the outside of the beacon.
4) Each 406 MHz ELT is programmed with a unique hex ID code (i.e., registration code) that is transmitted to the SAR satellite system. At a minimum, this code provides information regarding:
   a) Unique aircraft or ELT identification,
   b) Country of origin, and
   c) Latitude and longitude position data, when connected to aircraft navigation system.
5) If the beacon is reprogrammed to a new protocol, aircraft tail number, different country, etc., the 15 Hex ID changes and the beacon requires relabeling.

2. Registration

A. Responsibility

1) It is the responsibility of the aircraft owner to register the ELT.
   a) If an ELT is moved to a different aircraft (i.e., an aircraft other than the one it was originally installed on), and/or the aircraft is registered in a new country, the ELT must be re-programmed and re-registered.
   b) If the aircraft is registered in a new country, the ELT must be re-programmed and re-registered.
   c) The product label must be re-marked with the new HEX ID code to indicate new programming, if applicable.

B. Required Information

1) The following information is required when registering an ELT:
   a) The unique Hex ID code printed on the ELT product label,
   b) The information listed below:
      1. Owner's name,
      2. Address,
      3. Telephone number,
      4. Aircraft type and registration number
2) The information (i.e., address, telephone number, etc.), filed as part of the registration process, must be kept up to date.

C. Registration Information Resources

1) Refer to COSPAS-SARSAT documents G.005 and S.007 for information regarding ELT programming and registration. These documents are available at www.cospas-sarsat.org.

D. Where to Register

1) In the United States, the National Oceanic and Atmospheric Administration (NOAA) is the registration agency.
2) Specific registration web sites and information may be found at:
   a) The ARTEX products web site at www.acrartex.com, which has links to on-line registration sites and also a link to registration forms and instructions for a number of countries.

b) The NOAA ELT registration web site at beaconregistration.noaa.gov where an ELT may be directly registered in the United States.

NOTE: NOAA may also be contacted by mail at:

SARSAT Beacon Registration

NSOF, E/SPO53

1315 East West Hwy

Silver Spring, MD 20910-9684

or by phone at 1-888-212-7283 or 301-817-4565.

3) In other countries, the national civil aviation authority in the applicable country should be contacted to obtain registration information.