ARTEX ELT 4000 / ARTEX ELT 4000 HM
Emergency Locator Transmitter

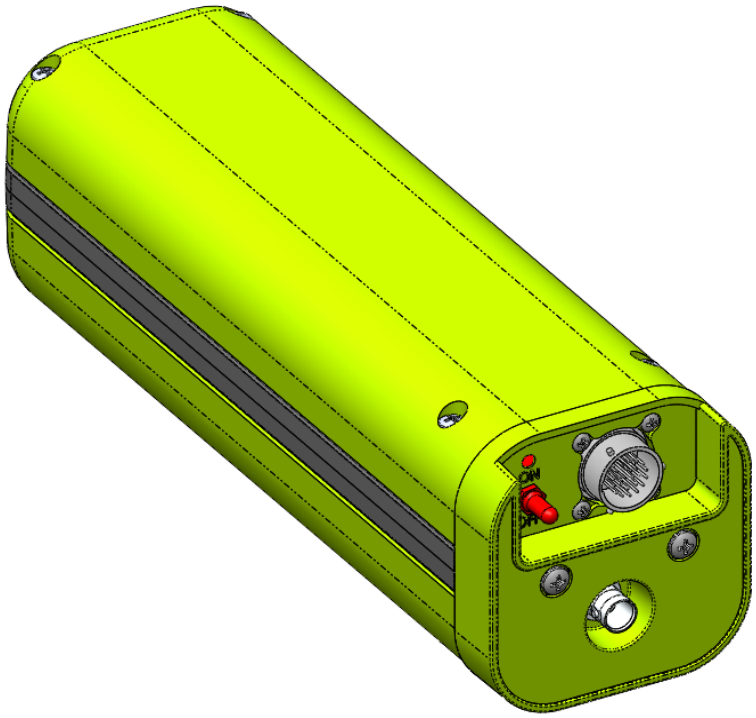

Description, Operation, Installation and Maintenance Manual
Y1-03-0333 Rev. N

ATA Code #25-62-37

ARTEX PRODUCTS / ACR ELECTRONICS, INC.
5757 Ravenswood Rd, Ft. Lauderdale, FL 33312
Phone (954) 981-3333, Fax (954) 983-5087
www.acrartex.com

This manual includes data for the following equipment:

Component	Labeled Part No.	Purchase Part No.
Emergency Locator Transmitter	A3-06-3005 (ARTEX ELT 4000) A3-06-3005-1(ARTEX ELT 4000 HM)	8260 8271
2-Wire Remote Switch	A3-06-2759	8304
2-Wire Slim Remote Switch	A3-06-3214	A3-06-3214
RC310A 2-Wire Remote Switch with additional features	A3-06-3216	A3-06-3216
5-Wire Remote Switches	345-6196-04	455-6196
Install Kit	455-7422	455-7422
Antenna, Rod, White	110-338	110-338
Antenna, Rod, Black	110-338-01	110-338-01
Antenna, Rod, Single Input, Tri-Band	A3-06-2835	8603
Antenna, Blade, White	110-340	110-340
Antenna, Blade, Gray w/protective edge	110-340-01	110-340-01
Antenna, Blade, White	110-341	110-341
Cable, Coaxial, BNC to BNC, 6 ft.	611-6013-04	611-6013-04
Mounting Tray Sub-Assay	452-5050-1	8342
Protecting Top Cover	452-3052-1	8343
Mounting Cap	452-5066-1	8344
Battery Assembly, Alkaline	A3-06-3003	8340
Mounting Strap	A3-06-3043	8264
External Buzzer	130-4004	130-4004
External Buzzer	452-6505	452-6505
Programming Adapter, Programmed	A3-06-2868	8319
Programming Adapter, Default	A3-06-2869	8320

NOTICES

THE INFORMATION CONTAINED HEREIN IS NOT PROPRIETARY.

Information in this manual is subject to change without notice. ACR Electronics, Inc. makes no warranty, expressed or implied, with regard to this manual, including but not limited to any implied warranties of merchantability, fitness for a particular purpose, and non-infringement. In addition, ACR Electronics, Inc. makes no warranty with regard to the documentation or data contained herein. ACR Electronics, Inc. is not liable in the event of incidentals, special, consequential, or any other damages in connection with or arising from furnishing, performance, or use of this manual.

For further information contact Sales, ACR Electronics, Inc., 5757 Ravenswood Rd, Fort Lauderdale, FL 33312. Telephone (954) 981-3333.

AIRWORTHINESS LIMITATIONS

The Airworthiness limitations section is FAA approved and specifies inspections and other maintenance required under 14 CFR§ 43.16 and 91.403, unless an alternative program has been approved.

IMPORTANT NOTICE

ACR Electronics, Inc. will be responsible for full distribution and revisions of ICA's (Instructions for Continued Airworthiness). For inquiries regarding the content and currency of this manual, contact ACR Electronics, Inc., 5757 Ravenswood Rd, Fort Lauderdale, FL 33312. Telephone (954) 981-3333.

TABLE OF CONTENTS

TABLE OF CONTENTS 4

LIST OF ACRONYMS, ABBREVIATIONS AND DEFINITIONS 7

LIST OF FIGURES 10

RECORD OF REVISIONS 11

SERVICE BULLETIN LIST 12

LIST OF EFFECTIVE PAGES 13

INTRODUCTION 14
- Manual Usage 14
  - A. General 14
  - B. Application 14
- Model Description 15
  - A. ELT 4000 15
- Approvals 15
  - A. ELT 15
  - B. Battery 15
  - C. RTCA DO-160G Compliance 16
- Frequency Allocation 17
  - A. Application 17
  - B. Discussion 17
- References 17
  - A. Regulatory Documents 17
  - B. Other Documents 18

DESCRIPTION AND OPERATION 19
- Description 19
  - A. Functional Overview 19
  - B. System Components 20
- Operation 23
  - A. Overview 23
  - B. Normal Operation 23
  - C. Manual Activation 23
  - D. ELT Reset 24
  - E. Functional Check 24
- Specifications 24
  - A. Environmental and Physical 24
  - B. Electrical 25
  - C. Antenna 26

TEST AND FAULT ISOLATION 27
- Inspection and Test Procedures 27
  - A. Checklist 27
  - B. Preparation 27
  - C. Coax Cable and Wiring Connections Inspection – Item 1 27

D. Mounting Tray and Hardware Inspection – Item 2 28
E. Battery Pack Inspection – Item 3 28
F. G-Switch Functional Check – Item 4a 28
G. G-Switch Functional Check (Helicopter Models Only)– Item 4b 29
H. Performance Test Setup 30
I. 121.5 MHz Frequency Measurement and Audio Modulation Check– Items 5a and 5b 31
J. 121.5 MHz Power Output Measurement – Item 5c 31
K. 406 MHz Frequency Measurement – Item 5d 31
L. 406 MHz Power Output Measurement – Item 5e 32
M. Current Draw Test – Item 5f 33
N. Digital Message Verification – Item 5g 34
O. ELT Reset Check – Item 5h 35
P. Installed Transmitter / Antenna Test – Item 6 35
Q. Antenna Test – Item 7 35
R. Inspection and Test Documentation – Item 8 36

Fault Isolation 36
A. Self-Test 36
B. GNSS Test 37
C. Troubleshooting 40

REMOVAL 41

ELT 41
A. ELT Removal 41

Battery 42
A. Battery Removal 42

Material or Equipment Return 43
A. Shipment Information 43
B. Return Material Authorization 43

INSTALLATION 44

Regulatory Requirements and Guidelines 44
A. For US Registered aircraft: 44
B. TSO C126b, Paragraph D 44
C. FAA 44
D. Canada 44
E. Other Countries 45
F. RTCA 45

Mounting Tray 46
A. Location 46
B. Installation 49

Antenna 49
A. General 49
B. Location 50
C. Installation General Info 50

Remote Switch 53
A. Location 53

Buzzer 54
A. Location 54
B. Installation 54

Wiring 56
A. General Considerations and Recommendations 56

B. Remote Switch Harness Fabrication 60
C. ELT 22-Pin Plug Installation 62
ELT Installation and Test 63
A. Harness ELT Circular Connector Sealing 63
B. Installation Documentation 63
Battery Pack Installation 64
A. Battery Installation and Reinstallation 64

ILLUSTRATED PARTS LIST 66
Introduction 66
A. Purpose 66
B. IPL Usage Guide 66
A. Ordering Information 66

APPENDIX A – ELT REGISTRATION 70
Background Information 70
A. Hex ID Code (15-Hex ID) 70
B. Reason for Registration 70
C. Registration Information Resources 70
Registration 71
A. Responsibility 71
B. Required Information 71
C. Where to Register 71

APPENDIX B – PROGRAMMING ADAPTER OPTION 72
Description and Operation 72
A. Purpose 72
B. Physical Description 72
C. Functional Description 72
D. Operation 73
Installation and Programming 73
A. General 73
B. Wiring 74
C. Assembly 75
D. Installation 76
E. PA Programming 76
F. Example Programming Scenarios 77
G. Aircraft ID Verification Test 77

LIST OF ACRONYMS, ABBREVIATIONS AND DEFINITIONS

Term	Definition
AC	Advisory Circular – Federal Aviation Administration (USA) bulletin with special information. For the purposes of this document, the acronym AC does not refer to electrical alternating current.
ACTIVATION	Activation refers to an ELT that has been commanded to transmit, either manually or by G-switch, but may not be transmitting on one or more frequencies.
AWG	American Wire Gauge - An electrical wire diameter standard. Look for this acronym in front of or following a wire size number.
BNC CONNECTOR	A coax cable connector having 50Ω impedance and used for Radio Frequency (RF) signal connections.
CAR	Canadian Aviation Regulations – The rules and regulations governing the manufacture, certification, operation, maintenance and alteration of aircraft in Canada.
CFR	Code of Federal Regulations – The general and permanent rules published in the Federal Register by the executive departments and agencies of the Federal Government. Title 14, "Aeronautics and Space", contains the FARs.
CIRCULAR CONNECTOR	Round connectors – connector for low voltage/current signals and electrical currents.
CONTAINER	The term "container", within the context of this document, refers to a device designed to suppress RF signals, such that the broadcast of an ELT placed in the container cannot reach the SAR satellite system.
COSPAS-SARSAT	The international search and rescue consortium that governs the international satellite-based search and rescue distress alert detection and information distribution system. For a complete description, go to the official web site for the International Cospas-Sarsat Program, http://www.cospas-sarsat.int.
DER	Designated Engineering Representative – An individual qualified and designated by the FAA to approve, or recommend approval, of technical data to the FAA.
DRIP LOOP	Extra wire length used to form a U-shaped bend in a wire or cable. Water or other fluids will flow down to the bottom of the loop and drip off. Electrical connections are made at the top of the loop.
ELT	Emergency Locator Transmitter – ELTs are installed on aircraft and used to send emergency signals to the Search and Rescue (SAR) satellite system. The word "beacon" is associated with these devices.
ELT 4000 HM	ELT 4000 Helicopter Model
EMI	Electromagnetic Interference – An undesirable disturbance that affects an electrical circuit due to either electromagnetic conduction or electromagnetic radiation emitted from an external source; also called radio frequency interference (RFI).

EUROCAE	European Organization for Civil Aviation Equipment – EUROCAE documents are widely referenced as a means of compliance to European Technical Standard Orders (ETSOs) and other regulatory documents.
FAA	Federal Aviation Administration – The United States government agency for aircraft safety and regulation.
FAR	Federal Aviation Regulations – The rules and regulations governing the manufacture, certification, operation, maintenance, repair and alteration of aircraft in the United States.
FORM 337	FAA Form 337 is required when a major repair and/or major alteration is performed on an aircraft. Refer to FAR, Part 43, Appendix A and the definitions of Major Repair/Alteration contained in FAR, Part 1, for guidance.
FSDO	Flight Standards District Office – FAA district offices responsible for aircraft certification, operation, maintenance and modification issues, approvals and enforcement.
GNSS	Global Navigation Satellite System - a satellite system that is used to pinpoint the geographic location of a user's receiver anywhere in the world.
G-SWITCH	Velocity switch that detects sudden deceleration and is used to automatically activate an ELT; may also be referred to as a "crash sensor".
LED	Light Emitting Diode – Semiconductor device that emits light when current is passed through it. Usually used as a status or warning indicator.
MIL	The three-letter acronym that stands for "Military" and precedes military specifications and standards numbers (e.g., MIL-W-2828 would indicate a wire specification and MIL-STD-2828 would indicate a standard).
P/N	Part Number – Refers to an ACR part number, unless otherwise noted.
PLUG	The term "Plug", within the context of this document, refers to the male half of an electrical connector.
RCP	Remote Control Panel
RECEPTACLE	The term "Receptacle", within the context of this document, refers to the female half of an electrical connector.
RF	Radio Frequency – The range of electromagnetic radiation that constitutes the radio spectrum and corresponds to the frequency of alternating current electrical signals used to produce and detect radio waves.
RTCA	RTCA Inc. – Organization that makes recommendations for airworthiness; refer to https://www.rtca.org for more information.
RTV	A rubbery silicon-based adhesive typically used to prevent vibration problems and water intrusion.
SAR	Search and Rescue
SCREEN ROOM	Refers to a room designed to block RF signals, such that the broadcast of an ELT placed in the screen room cannot reach the SAR satellite system.
SERVICE LOOP	A length of wire or cable at the connection point that is of sufficient length to allow a component to be withdrawn from its mounting position and disconnected from its associated wiring.

TETHER	A cord or similar device that anchors something movable to a stationary point or anchors two items together, such that they cannot become separated beyond the length of the tether.
TRANSMISSION	Transmission identifies when the ELT is sending a radio signal on one or more frequencies, which occurs after an ELT has been activated, either manually or by G-switch.
TSO	Technical Standard Order – A TSO is a minimum performance standard issued by the FAA for specified materials, parts, and appliances used on civil aircraft.
UTC	Coordinated Universal Time – A time standard based on International Atomic Time. UTC is the time system used in aviation and is often associated with Greenwich Mean Time (GMT) and/or "Zulu" time.
UUT	Unit Under Test
VHF	Very High Frequency – The 30 MHz to 300 MHz radio frequency band.
VSWR	Voltage Standing Wave Ratio – The ratio of the amplitude of a partial standing wave at an antinode (maximum) to the amplitude at an adjacent node (minimum), in an electrical transmission line. An ideal transmission line would have a VSWR of 1:1.

LIST OF FIGURES

Figure 1 ARTEX ELT 4000 Beacon and Mounting Assembly 20
Figure 2 Remote Switch Front View 21
Figure 3 Buzzers 21
Figure 4 Battery Pack Assembly 22
Figure 5 Antennas 22
Figure 6 ELT Orthogonal Axes 30
Figure 7 Performance Test Setup 31
Figure 8 Current Draw Test 33
Figure 9 Short & Long 406 MHz Message Examples 35
Figure 10 ELT Removal Sequence 41
Figure 11 Battery Pack Removal 42
Figure 12 ARTEX ELT 4000 Outline and Dimensions - Standard Case Option 47
Figure 13 ARTEX ELT 4000 Outline and Dimensions – Alternate Case Option 48
Figure 14 Typical Mounting Assembly Installation 49
Figure 15 Rod Antenna 110-338/110-338-01/A3-06-2835 Outline and Dimensions 51
Figure 16 Blade Antenna 110-340/110-340-01 Outline and Dimensions 52
Figure 17 Blade Antenna 110-341 Outline and Dimensions 52
Figure 18 5-Wire and 2-Wire (A3-06-2759) Remote Switch Outline and Dimensions 53
Figure 19 2-Wire (A3-06-3214) Remote Switch Outline and Dimensions 53
Figure 20 2-Wire (A3-06-3216) Remote Switch Panel Outline and Dimensions 54
Figure 21 Buzzer Outline and Dimensions 55
Figure 22 5-Wire Remote Switch Harness Wiring Diagram 57
Figure 23 2-Wire Remote Switch (P/N A3-06-2759 and slim switch A3-06-3214) Wiring Diagram 58
Figure 24 2-Wire Remote Control Panel (P/N A3-06-3216) Wiring Diagram 59
Figure 25 Harness ELT 22-Pin Plug Arrangement 62
Figure 26 Battery Pack Installation 64
Figure 27 ELT 4000 Main Assembly and Installation (Configuration A Shown) 67
Figure 28 Harness Components 68
Figure 29 Antennas 69
Figure 30 Programming Adapter 72
Figure 31 Programming Adapter Interface Wiring Diagram 74
Figure 32 Programming Adapter Installation 76

RECORD OF REVISIONS

REVISION	CHANGE	DATE	REVISION	CHANGE	DATE
A	W/I 05-EN-01	2/6/18			
B	ECO 16892	4/19/18			
C	ECO 17024	2/28/19			
D	ECO 17084	1/18/20			
E	ECO 17261	4/7/20			
F	ECO 17300	5/28/20			
G	ECO 17328	7/1/20			
H	ECO 17407	2/9/21			
J	ECO 17942	1/18/23			
K	ECO 18023	7/13/23			
L	ECO 18335	2/24/25			
M	ECO 18392	6/23/25			
N	ECO 18411	9/12/25			

SERVICE BULLETIN LIST

SERVICE BULLETIN NO	ISSUE DATE	SUBJECT	MANUAL REV NO	MANUAL REV DATE

LIST OF EFFECTIVE PAGES

SUBJECT	PAGE	DATE	SUBJECT	PAGE	DATE
Title Page	1	9/12/25	Test and Fault Isolation (cont.)	39	5/28/20
	2	2/24/25	Removal	40	2/9/21
Notices	3	5/28/20		41	5/28/20
Table of Contents	4	2/9/21		42	5/28/20
	5	2/9/21	Installation	43	5/28/20
	6	2/9/21		44	5/28/20
List of Acronyms, Abbreviations and Definitions	7	5/28/20		45	2/9/21
	8	5/28/20		46	2/24/25
	9	5/28/20		47	5/28/20
List of Figures	10	2/9/21		48	5/28/20
Record of Revisions	11	9/12/25		49	5/28/20
Service Bulletin List	12	5/28/20		50	5/28/20
List of Effective Pages	13	9/12/25		51	2/9/21
Introduction	14	5/28/20		52	2/9/21
	15	5/28/20		53	5/28/20
	16	1/18/23		54	5/28/20
	17	5/28/20		55	2/9/21
	18	2/24/25		56	2/9/21
Description and Operation	19	5/28/20		57	2/9/21
	20	5/28/20		58	2/9/21
	21	2/9/21		59	2/9/21
	22	5/28/20		60	2/9/21
	23	5/28/20		61	5/28/20
	24	7/13/23		62	7/1/20
	25	5/28/20		63	7/1/20
	26	5/28/20	Illustrated Parts List	64	7/1/20
Test and Fault Isolation	27	6/23/25		65	2/9/21
	28	5/28/20		66	7/13/23
	29	6/23/25		67	7/1/20
	30	6/23/25	Appendix A	68	9/12/25
	31	5/28/20		69	7/1/20
	32	5/28/20	Appendix B	70	7/1/20
	33	1/18/23		71	7/1/20
	34	5/28/20		72	7/1/20
	35	2/9/21		73	7/1/20
	36	2/9/21		74	2/9/21
	37	5/28/20		75	2/24/25
	38	5/28/20		76	2/24/25

INTRODUCTION

Manual Usage

A. General

1) All references to the ARTEX ELT 4000 include the ARTEX ELT 4000 HM unless otherwise specified.
2) This manual describes the operation, installation, and maintenance of the ARTEX ELT 4000 emergency locator transmitter (ELT). The information is provided to ensure initial and continued airworthiness. Information presented in this manual is accurate at the time of printing, but is subject to change. Refer to the ARTEX web site at www.acrartex.com for the latest information and any updates to this manual.
3) Information on the Cospas-Sarsat emergency locator beacon registration requirements and procedures is provided in Appendix A – ELT Registration.
4) Web links provided in this manual were accurate at time of printing but may be subject to change.
5) ACR Electronics, Inc. reserves the right to add approved components to the ELT system; including but not limited to antennas, remote switches and coaxial cables. These changes are approved as "minor changes" pursuant to FAR 21, Subpart O for TSO holders.
6) Regulatory references contained herein are generally confined to web links provided in this manual, these were accurate at time of printing, but may be subject to change. Consult your national aviation authority for applicable requirements.

B. Application

1) This manual constitutes supporting data/documentation for the ARTEX ELT 4000, including:
   a) Description and Operation
   b) Test and Fault Isolation (includes inspection criteria)
   c) Removal
   d) Installation
   e) Registration
   f) Illustrated Parts List
2) Consult your national aviation authority for applicable requirements.
3) In the United States, the ARTEX ELT 4000 must be installed and maintained in accordance with the requirements herein, as well as any CFR and FAR Parts as applicable.
4) In Canada, the ARTEX ELT 4000 must be installed and maintained in accordance with the requirements herein as well as Canadian Aviation Regulations (CAR) as applicable.
5) ARTEX ELT 4000 installation and maintenance in all other countries must comply with the requirements herein as well as applicable national airworthiness requirements. In the absence of any inspection requirements from national regulatory authorities, operators should follow the annual inspection procedures outlined in Inspection and Test Procedures on page 27 of this manual.
6) The accessories (i.e. remote switch and antennas) referenced in this manual are those most commonly associated with the ARTEX ELT 4000. Other options, such as an alternative remote switch configuration or a navigation interface, should be installed and maintained in accordance with instructions specific to the accessory.

NOTE: Contact ACR Electronics, Inc. for optional accessories approved for use with ARTEX ELT 4000.

7) To ensure proper operation, only parts listed in the Illustrated Parts List of this manual or those recommended by ACR Electronics, Inc. may be used as replacement parts for the ARTEX ELT 4000.

Model Description

A. ELT 4000

1) The ARTEX ELT 4000 is a type AF (Automatic Fixed) Emergency Locator Transmitter (ELT), which transmits on 121.5 and 406 MHz.
2) The housing and mounting assemblies are made of impact-resistant polycarbonate-polyester plastic.
3) An installation kit, cockpit remote switch, coax cable, audible buzzer and fixed antennas are available.

Approvals

A. ELT

1) FAA TSO C126b
   a) This article meets the minimum performance and quality control standards required by a technical standard order (TSO). Installation of this article requires separate approval.
2) Transport Canada – (As per FAA/TC bilateral agreement)
3) Industry Canada
4) ETSO-2C126a – (As per FAA/EASA bilateral agreement)
5) Cospas-Sarsat

B. Battery

ELT 4000 Battery system requires no TSO certification. The individual battery cell certification is limited to UL and CE standards. ELT 4000 battery system is not considered Hazmat but should be disposed of within the guidelines of your local authority.

NOTE: The conditions and tests for TSO approval of this article are minimum performance standards. Those installing this article, on or in a specific type or class of aircraft, must determine that the aircraft installation conditions are within the TSO standards. TSO articles must have separate approval for installation in an aircraft. The article may be installed only according to 14 CFR part 43 or the applicable airworthiness requirements.
To find an authorized service center, go to
https://www.acrartex.com/support/dealer-locator/dealer-locator-url

C. RTCA DO-160G Compliance

1) DO-160G Environmental Categories:
[F1]BB[204a][S(C)U(G)]ERXXXSZZAZ[ZCX][204a]M[XXXXXX][XXXX]XXC
2) The DO-160G environmental categories breakdown is detailed in Table 1.

CAT	SECTION	DESCRIPTION	COMMENTS
F1	4.0	Temperature/Altitude	-20 °C to +55 °C , Altitude +55,000 ft.
B	5.0	Temperature Variation	B = 5°C/min
B	6.0	Humidity	
DO-204a	7.0	Operational Shocks and Crash Safety	500 & 100 G's , ED-62A/DO-204A in lieu of RTCA DO-160G test
[S(C)U(G)]	8.0	Vibration	
E	9.0	Explosion Atmosphere Test	
R	10.0	Waterproofness	Continuous Stream
X	11.0	Fluid Susceptibility	Not Applicable
X	12.0	Sand and Dust	Not Applicable
X	13.0	Fungus Resistance Test	Not Applicable
S	14.0	Salt Fog	
Z	15.0	Magnetic Effect Test	
Z	16.0	Power Input Test	
A	17.0	Voltage Spikes	
Z	18.0	AF Susceptibility	
ZCX	19.0	Induced Signal Susceptibility	
DO-204a	20.0	RF Susceptibility	
M	21.0	RF Emissions	
[XXXXXX]	22.0	Lightning Induced Transient Susceptibility	Not Applicable
[XXXX]	23.0	Lightning Direct Effects	Not Applicable
X	24.0	Icing Test	Not Applicable
X	25.0	Electrostatic Discharge Test	
C	26.0	Fire, Flammability Test	Fire Resistance
RTCA DO-204a Conditions		**Categories**	**Section**
Shock Crash Safety		500 G's 4 ms 100 G's 23 ms	Para. 2.3.4.1 Para. 2.6.3.2
Impact			Para. 2.3.4.2
Crush			Para. 2.3.4.3
Flame			Para. 2.3.7.1

Table 1 Environmental Categories

Frequency Allocation

A. Application

1) This section addresses the 406.0 - 406.1 MHz transmitter frequencies which are assigned to the distress frequency band.

B. Discussion

1) The product identification label on each ELT specifies the transmission frequencies of the individual ELT. The ARTEX ELT 4000 transmits a frequency of 406.031 MHz. Allocation of frequencies, based on beacon population per specified frequency band, are controlled by Cospas-Sarsat.
2) The frequency references throughout this manual for the 406 MHz component should be considered the baseline and the specific frequency indicated on the ELT product label should be substituted.

References

A. Regulatory Documents

1) The following regulatory documents are referred to herein. When referring to such documents, it is the manual user's responsibility to ensure they are using the latest revision or release of such documents. To that end, the revision designator of specific document numbers has not been included, with the exception of the RTCA document listing, which reflects the revision level of the documents at the time of TSO testing and certification.
2) Except in the case of a printed manual, reference documents available online or source locations are linked to applicable web sites.
3) United States
   a) AC 43-9, "Maintenance Records"
   b) AC 43-210, "Standardized Procedures for Requesting Field Approval of Data, Major Alterations, and Repairs"
   c) AC 43.9-1, "Instructions for Completion of FAA Form 337"
   d) AC 43.13-1, "Acceptable Methods, Techniques, and Practices – Aircraft Inspection and Repair"
   e) AC 43.13-2, "Acceptable Methods, Techniques, and Practices - Aircraft Alterations"
   f) CFR Title 47, Part 87, "Aviation Services"
   g) FAR, Part 43, "Maintenance, Preventive Maintenance, Rebuilding, and Alteration"
   h) FAR, Part 91, "General Operating and Flight Rules"
   i) TSO-C126b, "406 MHz Emergency Locator Transmitter (ELT)"
4) Canada
   a) CAR, Part V, "Airworthiness"
   b) CAR, Part VI, "General Operating and Flight Rules"
5) COSPAS-SARSAT
   a) C/S G.005, "Cospas-Sarsat Guidelines on 406 MHz Beacon Coding, Registration and Type Approval"
   b) C/S S.007, "Handbook of Beacon Regulations"
6) RTCA – The following documents are available for purchase at RTCA's Web Site, www.rtca.org, or by mail:
   a) DO-160G, "Environmental Conditions and Test Procedures for Airborne Equipment"
   b) DO-178C, "Software Considerations in Airborne Systems and Equipment Certification"
   c) DO-182, "Emergency Locator Transmitter (ELT) Equipment Installation and Performance"

d) DO-204A, "Minimal Operational Performance Standards for 406 MHz Emergency Locator Transmitters (ELT)"

B. Other Documents

1) The ARTEX model beacon programmer operating manual is available online at the ACR products web site at www.acrartex.com, or from ACR Electronics, Inc. upon request:

   a) Document number Y1-03-0399, "Field Programming Tablet (FPT) User Manual"

NOTE: Please contact ACR Technical Support for legacy programmer compatibility.

DESCRIPTION AND OPERATION

Description

A. Functional Overview

1) The ELT automatically activates during a crash. The first digitally encoded 406 MHz burst, as well as the continuous standard sweep tone of the 121.5 MHz, will start transmitting approximately 50 seconds after activation. Approximately every 50 seconds thereafter, the 406 MHz transmitter turns on and transmits an encoded signal of either 440ms or 520ms, depending on the beacon programming protocol. This message is received by the Cospas-Sarsat Search and Rescue (SAR) satellite system.
2) The information contained in the message includes:
   a) Beacon serial number, aircraft identification or registration number
   b) Country of registration and country code
   c) Position coordinates, if beacon is programmed to receive position data from the aircraft navigation system
3) When the 406 MHz signal is detected by the Cospas-Sarsat satellite Low Earth Orbit system (LEO), a position is calculated and the 121.5 MHz signal is used to home in on the crash site.
4) The 406 MHz transmitter will operate in this mode for 24 hours and then shut down automatically. The 121.5 MHz transmitter (homer transmitter) will continue to operate until the batteries are exhausted, which is at least 50 hours.
5) The location accuracy of the 406 MHz transmitter is typically 3 km. If position information is extracted from the aircraft navigation system, the accuracy improves to approximately 100 meters. The ELT 4000 is able to accept position information from the ARINC 429 data bus.
6) The 406 MHz digital message provides search and rescue authorities the information to contact the owner/operator of the aircraft through information contained in a database. The database may include:
   a) Type of aircraft and aircraft registration number
   b) Owner address and telephone number
   c) Alternate emergency contact
7) Previous to February 1, 2009, the Cospas-Sarsat system used the 121.5 MHz signal as an aid to determine beacon location. As of this date, the use of this signal for satellite location has been terminated. 406 MHz capable ELTs replace the older Class B beacons.
8) Aircraft communications transceivers are not capable of receiving 406 MHz transmissions; therefore, the only methods of monitoring the ELT are:
   a) The blinking cockpit remote switch LED
   b) The buzzer
   c) 121.5 MHz transmissions, which can be monitored using an aircraft-band radio tuned to 121.5 MHz.

B. System Components

1) The ARTEX ELT 4000 housing assembly is made of high impact, fire resistant, polycarbonate-polyester plastic. See Figure 1.

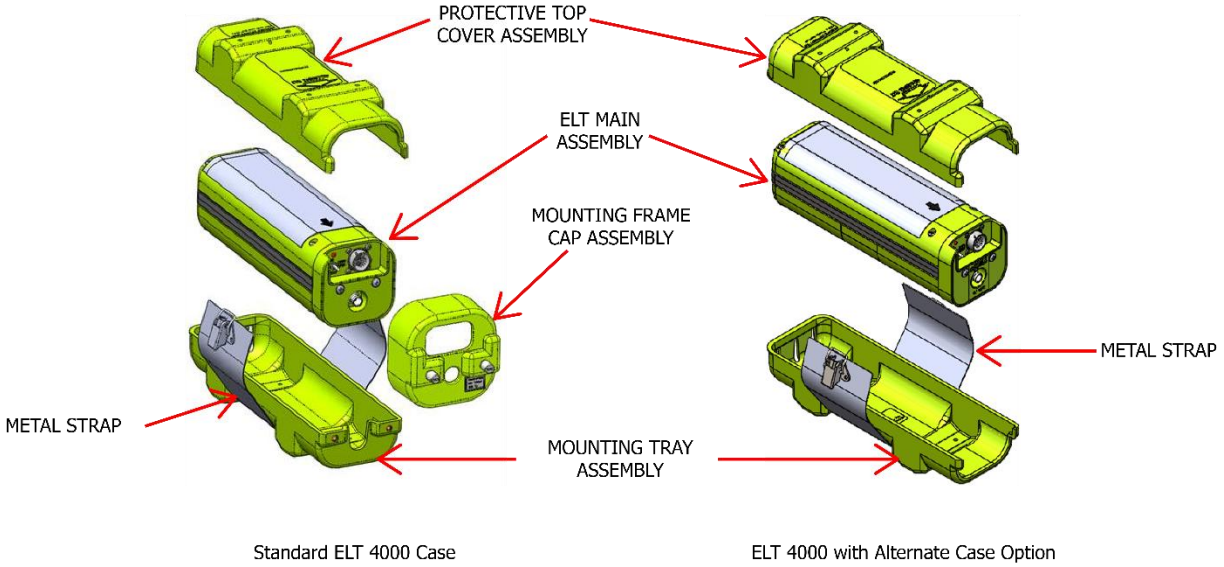

Figure 1 ARTEX ELT 4000 Beacon and Mounting Assembly

2) The cockpit-mounted remote switch assembly includes a status LED and control switch. The switch allows the operator to manually activate and reset the ELT for testing (see Figure 2).

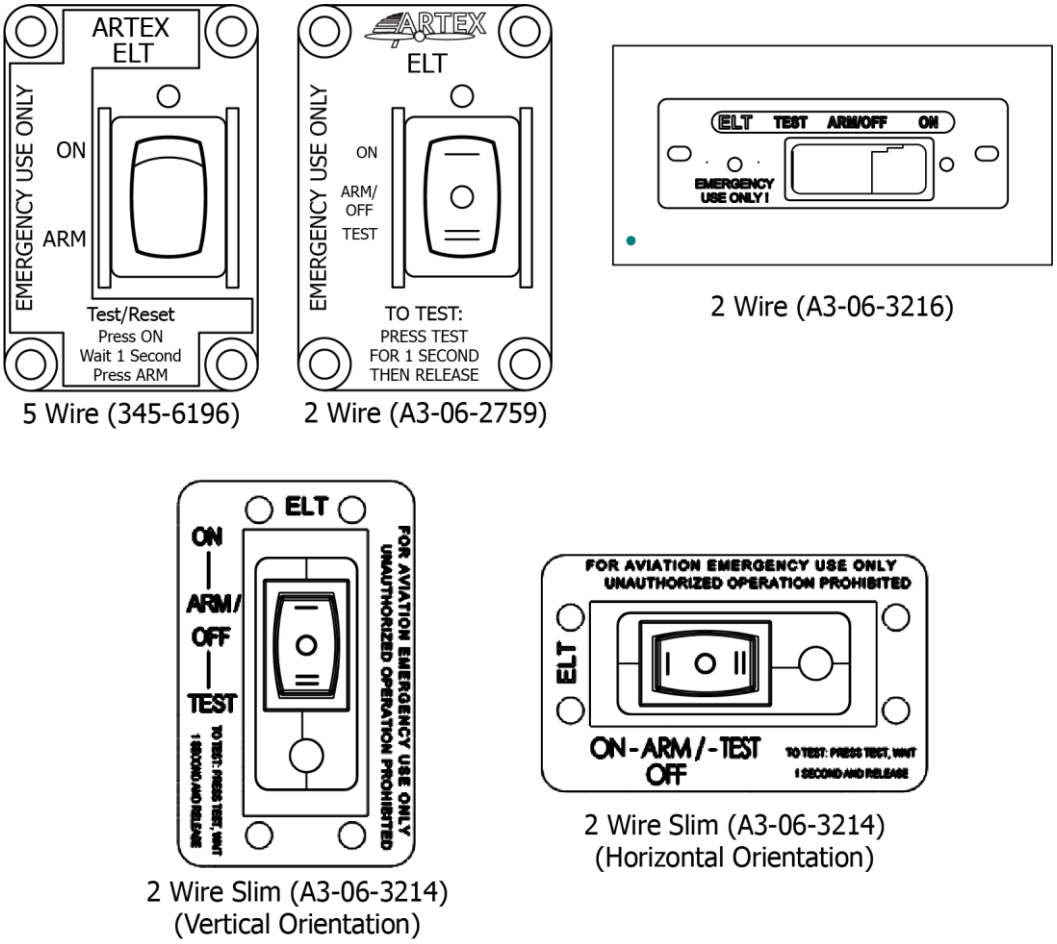

Figure 2 Remote Switch Front View

3) The buzzer provides an audible alert when the ELT is active (see Figure 3).

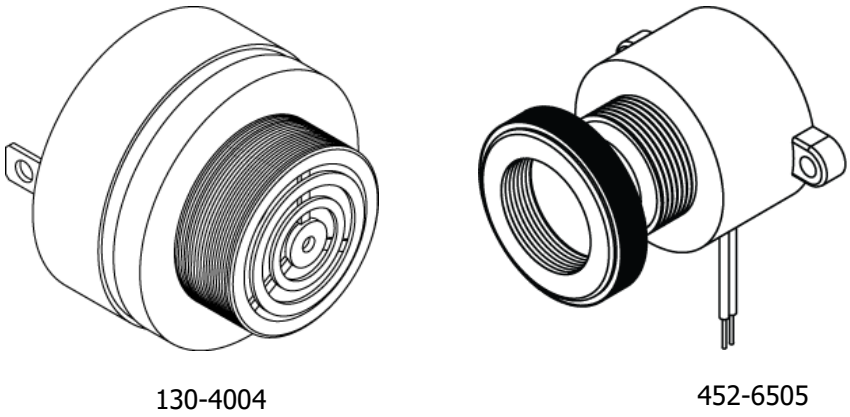

Figure 3 Buzzers

4) The battery pack assembly for the ARTEX ELT 4000 consists of eight "D" size alkaline cells (see Figure 4).

NOTE: The ELT battery has a life of five years.

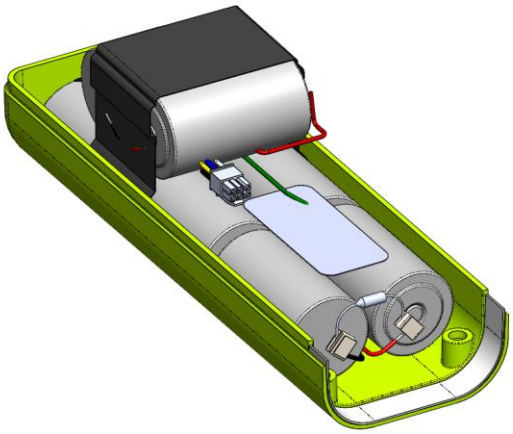

Figure 4 Battery Pack Assembly

5) There are six antennas that are used with the ARTEX ELT 4000. These are shown in Figure 5.

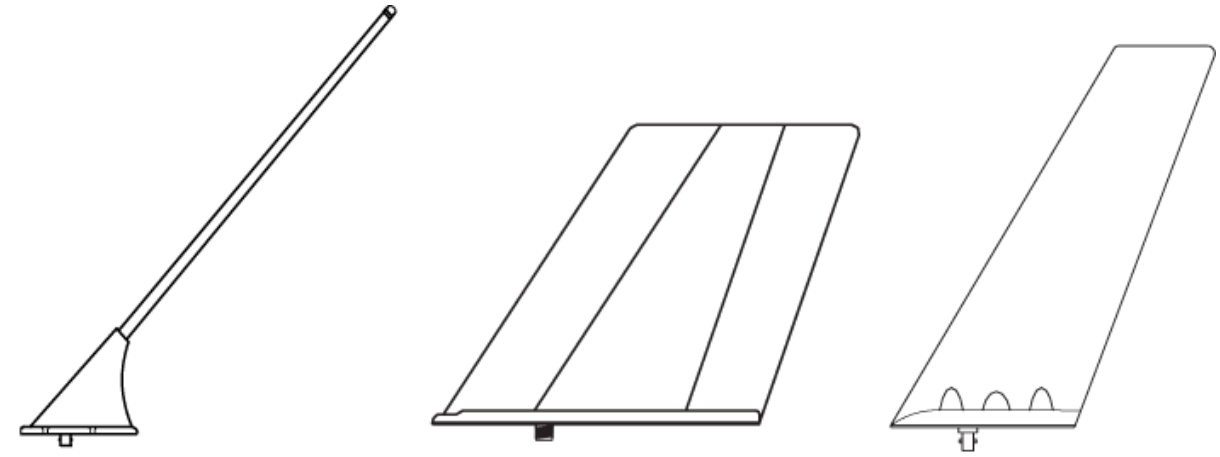

110-338/110-338-01/A3-06-2835 110-340/110-340-01 110-341

Figure 5 Antennas

Operation

A. Overview

1) A primary feature of the ARTEX ELT 4000 is its simplicity of operation.
2) A connection jumper ("G-switch loop") between pins 12 and 13 on the connector enables the G-switch circuitry, allowing activation when the acceleration threshold is exceeded. The jumper is wired into the mating connector of the cockpit remote switch wire harness. When this connector is removed, the ELT can be manipulated without the possibility of G-switch activation.
3) With the G-switch loop in place, neither the cockpit remote switch nor the ELT local switch can be positioned to prevent automatic activation. With the G-switch loop open (removed), the ELT G-switch cannot be activated by dropping, rough handling or during shipping.
4) Activation is indicated by the presence of the swept audio tone transmitted on the 121.5 MHz signal, the buzzer sounding and the flashing cockpit remote switch and/or ELT local LED. All these indicators immediately begin upon ELT activation.

NOTE: If activated manually by the ELT switch or remote switch, the 121.5 MHz swept audio tone and first 406 MHz transmission will not occur until approximately 50 seconds have elapsed allowing time to deactivate before an emergency transmission is sent.

5) To deactivate the beacon, either the position of the local ELT switch or the cockpit remote switch must be changed from "ON" to ""ARMED". If activation is from the G-switch, the switch position must first be set to "ON" then changed to "ARMED".

NOTE: The ELT CANNOT be disarmed or disabled from the cockpit. Cockpit operation is limited to activating and resetting the ELT.

6) A warning buzzer is required by TSO C126b to indicate ELT activation when the engine(s) are not operating. The buzzer is powered by the ELT and is not dependent upon the aircraft power for operation. The indicator "beeps" periodically, with the periods between pulses increasing after 12 hours.

B. Normal Operation

NOTE: The beacon will begin transmitting 406 MHz and 121.5 MHz 50 seconds after activation and will continue to do so at 406 MHz every 50 seconds until the ELT is deactivated or 24 hours have expired.

1) In normal operation, the ELT is "ready to activate". The cockpit remote switch and the local switch on the ELT are both in the "ARM" position. The G-switch loop (connection jumper between pins 12 and 13 of the connector) is in place to enable the ELT. In this condition, if the ELT movement causes the G-switch threshold to be exceeded, the beacon will activate.

C. Manual Activation

1) The ELT may be manually activated by placing either the remote switch or the ELT local switch in the "ON" position and leaving it there for more than 5 seconds. This forces the ELT to activate, regardless of whether or not the G-switch loop is in place.
2) Manual activation is indicated by the presence of the buzzer sounding, and the flashing cockpit remote switch and/or ELT local LED. All these indicators immediately begin upon ELT activation. The swept audio tone transmitted on the 121.5 MHz signal does not commence until approximately 50 seconds after manual activation.

NOTE: The ELT cannot be reset if either the cockpit remote switch or the ELT local switch is in the "ON" position.

D. ELT Reset

1) If the ELT is inadvertently activated (for indications, see number 4) under Overview), reset it by moving either the cockpit remote switch or the local ELT switch to the "ON" position, and then move it back to the "ARM" position. If the switch is already in the "ON" position, move it to the "ARM" position.

E. Functional Check

1) A periodic self-test is recommended to verify operational status of the ELT. Perform in accordance with the self-test procedure in the Test and Fault Isolation section.

NOTE: TSO C126b requires battery capacity for a self-test to be conducted at least every six months. However, ELT 4000 has sufficient capacity to conduct a self-test monthly and a GNSS self-test monthly as required by the operator for a total maximum of 60 tests each over the five-year battery life. Actual test intervals will depend on an operator's regulatory requirements and operational preferences.

NOTE: If the beacon is programmed Serial User (short) Protocol, the sequence to initiate a GNSS self-test will be ignored and a normal self-test will be initiated instead.

Specifications

A. Environmental and Physical

1) Table 2 lists the environmental and physical specifications of the ELT 4000.

CRITERIA	PARAMETER	CHARACTERISTIC
Temperature	Storage	-55°C to +85°C
	Operating	-20°C to +55°C
Mechanical	Vibration	4.12 *g*, 10 Hz to 2,000 Hz
	Shock	500 *g* for 4 ms
	Crashworthiness	100 *g* for 23 ms
	Humidity	95% for 10 days
	Penetration	55 lbs from 6 in (25 kg from 15 cm)
	Crush	1,000 lbs (455 kg)
	Altitude	+55,000 ft (16,764 m)
Automatic Activation	Primary G-switch	4.5 ± 0.5 ft/sec (2.3 G)
	HM multi-axis G-switch	12.5G ±2.5G
Manual Activation	Unit or remote switch	
Weight	ELT Complete w/Battery Pack, Mounting Tray, and Covers	5.39 lbs (2.45 kg)
Dimension (L x W x H)	ELT Complete w/Battery Pack, Mounting Tray, and Covers	11.63" x 4.51" x 3.76" (295 x 115 x 96 mm)
Software/Firmware	In accordance with RTCA/DO-178c, Level D	

Table 2 Environmental Specifications

B. Electrical

1) Table 3 lists the electrical specifications of the ELT 4000.

CRITERIA	PARAMETER	CHARACTERISTIC
Operating Frequencies	406.031 MHz	± 1 kHz (16KOG1D)
	121.5 MHz	± 0.005% (A3X)
Modulation	406 MHz	Bi-Phase L (G1D)
	121.5 MHz	Amplitude Modulation (A3X)
Transmitter Duty Cycle	406 MHz	440 or 520 ms (± 1%), every 50 seconds (± 5%)
	121.5 MHz	Intermittent
Peak Effective Radiated Power (EIRP)	406 MHz	EIRP 5 W (37dBm) for 24 hrs @ -20°C to +55°C
	121.5 MHz	EIRP min 100mW (min 20 dBm) for 50 hrs @ -20°C to +55°C
Occupied Bandwidth	406 MHz	1.9 KHz max
	121.5 MHz	3.2 KHz max
Spurious Emissions	406 MHz	Per RTCA/DO-204A
	121.5 MHz	Per CFR Title 47 (FCC), Part 87
Battery	Type of Cell	Alkaline
	Voltage	12.0
	Amp-Hour Rating	10.0

Table 3 Electrical Specifications

C. Antenna

1) Table 4 lists the antenna specifications of the ELT 4000.

PARAMETERS	**CHARACTERISTICS**			
	110-340/-01 Tri-band	110-338/-01 Tri-band	110-341	A3-06-2835
Style	Blade	Rod	Blade	Rod
Frequencies	121.5 and 406 MHz			
VSWR	121.5 MHz 2.0:1 Max.		121.5 MHz 175:1 Max	121.5 MHz 2.0:1 Max
	406 MHz – 1.5:1 Max		406 MHz – 1.5:1 Max	406 MHz – 1.5:1 Max
Polarization	Vertical Monopole			
Radiation Pattern	As per Cospas-Sarsat T.007 and RTCA DO-160G			
Impedance (ohms)	50 Nominal			
Weight	1.45 lbs (0.66 kg)	0.45 lbs (0.20 kg)	0.80 lbs (0.36 kg)	0.45 lbs (0.20 kg)
Coax Cable	RG-142			
Connector	BNC Female			
Dimensions (Base to Tip)	7.75″ (197 mm)	15.5″ (394 mm)	10.1″ (257 mm)	15.5″ (394 mm)

Table 4 Antenna Specifications

Inspection and Test Procedures

NOTE: Testing requirements and intervals for ELTs are set by the local civil aviation authorities. Operators should confirm the appropriate requirements pertinent to their operation. In the absence of any inspection requirements from national regulatory authorities, operators should follow the annual inspection procedures outlined in this section.

A. Checklist

1) Table 5 provides a list of the ELT inspection and testing requirements, a copy of which may be used as a checklist to verify inspection and test completion. The item numbers in the table correspond to the item identifiers for each task.

NOTE: Items 5a through 5h are considered performance tests and may be required in some jurisdictions. Check with your local civil aviation authority.

ITEM NO.	DESCRIPTION	BY
1	Coax Cable and Wiring Connections Inspection	
2	ELT Mounting Tray and Hardware Inspection	
3	ELT Battery Pack Inspection	
4a	G-Switch Functional Check	
4b	G-Switch Functional Check (Helicopter Models Only)	
5a	121.5 MHz Frequency Measurement	
5b	Audio Modulation Check	
5c	121.5 MHz Power Output Measurement	
5d	406 MHz Frequency Measurement	
5e	406 MHz Power Output Measurement	
5f	Current Draw Test	
5g	Digital Message Verification	
5h	ELT Reset Check	
6	Installed Transmitter Test	
7	Antenna Test	
8	Inspection and Test Documentation	

Table 5 ELT Inspection & Checklist

B. Preparation

1) Remove the ELT. See ELT on page 41 for instructions.
2) Remove the battery . See Battery on page 42for instructions.

C. Coax Cable and Wiring Connections Inspection – Item 1

1) Check remote switch harness connector for corrosion, bent or broken pins, and other damage.

2) Check antenna coax cable connectors for corrosion, bent or broken center conductor, and other damage.

NOTE: Pay special attention to the center conductor to ensure the center conductor has not been damaged or pushed back into the connector housing.

D. Mounting Tray and Hardware Inspection – Item 2

1) Inspect mounting tray for cleanliness, cracks, and other damage.
2) Check mounting tray hardware for corrosion and security.
3) Replace or send the ELT for repair if any of the following conditions are true:
   a) Cracks on any of the casings.
   b) Missing or damaged O-ring
   c) Damaged connector housing, connector pins and antenna connections of ELT.
4) Replace remote switch if any of the following conditions are true:
   a) Cracks on the casing.
   b) Illegible lettering on the face
   c) Damaged wiring and connections of remote switch.

E. Battery Pack Inspection – Item 3

CAUTION: THE BATTERY PACK CONTAINS ELECTROSTATIC DISCHARGE SENSITIVE (ESD) COMPONENTS AND, AS SUCH, IT MUST BE HANDLED WITH CARE. IF POSSIBLE, WEAR A GROUNDED WRIST STRAP WHEN HANDLING THE BATTERY PACK DURING INSPECTION AND MAINTENANCE ACTIVITIES. TAKE PARTICULAR CARE TO AVOID TOUCHING THE EXPOSED CIRCUIT BOARD AND CONNECTOR PINS ON THE BOARD.

CAUTION: DO NOT USE ANY FOREIGN CLEANER ON ELT COMPONENTS. SUCH CHEMICAL AGENTS CAN BE HIGHLY DESTRUCTIVE TO THE MOUNTING HARDWARE AND ELT HOUSING, CAUSING CRACKING, FRACTURING AND OTHER DAMAGE.

1) Check battery cells, components, and connectors for corrosion and other damage. There should be no corrosion of the battery cells. The presence of (any) corrosion is cause to reject the battery pack.
2) Check wiring for breaks, damaged insulation, and improper or damaged connections.
3) Check housing for cracks and other visual damage.
4) Check the battery pack expiration date.
5) Replace the battery pack if any of the following conditions are true:
   a) After use in an emergency
   b) After an inadvertent activation of unknown duration
   c) When the total of all known transmissions exceeds one hour
   d) On or before battery replacement (expiration) date

NOTE: The new expiration date for replacing the battery must be legibly marked on the outside of the transmitter and entered in the aircraft maintenance record.

F. G-Switch Functional Check – Item 4a

CAUTION: A JUMPER AND 50-OHM LOAD IS REQUIRED TO PERFORM THIS CHECK. DUE TO POTENTIAL OF PHYSICAL OR ELECTRONIC DAMAGE IF THE JUMPER OR 50-

OHM LOAD IS IMPROPERLY INSTALLED, THIS STEP SHOULD BE ONLY PERFORMED BY AN EXPERIENCED TECHNICIAN/MECHANIC.

1) Reinstall the battery in accordance with Battery Pack Installation.
2) Perform this functional check within the first 5 minutes after the hour (UTC), as required by AC 43.13-1, Chapter 12, § 12-22, Note 3.
3) Install the 151-5060 G-switch Loop Test Plug on the ELT receptacle or jumper ELT receptacle pins 12 and 13.

   NOTE: The ELT cannot be activated using this procedure unless Pins 12 and 13 on the ELT plug are jumpered. See Figure 22, 23 or 24.

4) Verify the ELT switch is in the "OFF/ARM" position.
5) Monitor 121.5 MHz on a VHF receiver.
6) Activate the ELT by using rapid forward (i.e., Throwing) motion in the direction of the arrow on the ELT label, followed by a rapid reversing action.
7) Verify activation by listening for the aural sweep tone on the receiver.
8) Reset the ELT by toggling the toggle switch to the "ON" position and then back to the "OFF/ARM" position. The ELT will turn off.

   NOTE: If the throwing motion does not activate the ELT after 2 throws, then the ELT must be sent to an ARTEX authorized service center for evaluation.

G. G-Switch Functional Check (Helicopter Models Only)– Item 4b

1) This procedure outlines the steps required to test the five-axis G-switch installed in ARTEX Helicopter Model (HM) ELTs.
2) Testing of the primary and five axis G-switch can be accomplished by simulating a rapid deceleration in the required direction of the G-switch. Although the "football throw" test as outlined in item 4a is sufficient to test the forward G-switch, a sturdy padded surface, such as a padded chair or foam-covered workbench, is required to simulate the G-force required to trigger the remaining axes. The padding of the surface is required to prevent damage to the ELT.

   NOTE: The fixed wing G-switch is triggered by approximately 2.3 Gs of deceleration (axis +X in Figure 6), whereas the five-axis G-switch is triggered by 12.5 Gs of deceleration (axes -X, -Y, +Y, -Z, and +Z in Figure 6), and requires a significant force to activate. The higher G-rating precludes inadvertent activation in helicopter applications but will allow for activation during a mishap.

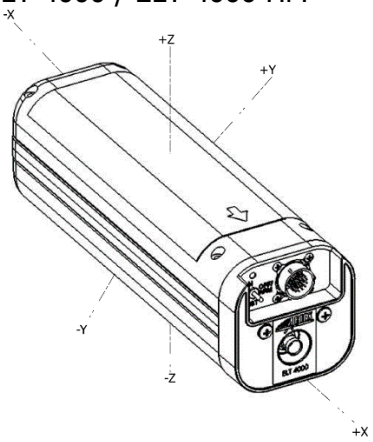

Figure 6 ELT Orthogonal Axes

3) Keep G-switch loop and 50-ohm load installed on the antenna port from Item 4a installed.
4) Utilizing the sturdy padded surface, hold the ELT 10 inches (26.1 Centimeters) above the test area and thrust down forcefully maintaining a level axis into the pad to test the -X axis (see Figure 6).
5) Repeat step 2 for the -Y, +Y, -Z, and +Z axes (see Figure 6).
6) Verify in each case that the ELT activates via G-switch trigger as indicated by the flashing LED. An auxiliary receiver set to 121.5 MHz should be used to detect the ELT signal.
7) Reset the ELT after each activation by toggling the ON/OFF switch to ON and then to OFF/ARM to reset the ELT.

NOTE: If after two attempts in each direction the ELT does not activate, then the ELT must be sent to an ARTEX authorized service center for evaluation.

CAUTION: **IF ACTIVATED, THE ELT WILL SEND A LIVE BURST SIGNAL TO SEARCH AND RESCUE SATELLITES IF LEFT ACTIVE FOR 50 SECONDS OR MORE.**

H. Performance Test Setup

1) Maximum Battery Test Time
   a) The ELT 4000 firmware continually keeps track of the beacon run time. The beacon controller microprocessor writes the operating time information to a memory Integrated Circuit (IC) in the battery pack, keeping the information up to date. Per FAA TSO requirements, an ELT battery must be replaced if the operation time is greater than one hour.
   b) If the operation time exceeds one hour, an error indicator will be displayed when a self-test is performed (see self-test section of this document). This does not affect the normal operation of the ELT 4000, but provides an indication to the user that the battery must be replaced, in order to comply with the FAA TSO requirements. To minimize battery run time, carefully plan all testing and operation verifications to avoid unnecessary operation of the ELT.
   c) In order to minimize battery usage, it is recommended that any annually required testing coincide with scheduled self-testing of the ELT.
2) Place the ELT in an RF enclosure or screen room to prevent RF emissions.

3) For final airworthiness verification, the ELT's own battery pack should be used as the power source for these measurements. An alternate power source should be used where lengthy servicing, other than the performance tests, is anticipated. Expired battery packs can be used if the airworthiness performance of the battery pack in the system is not required. The battery packs are capable of at least fifty (50) hours of operation at the end of five years of battery life.
4) To prevent damage to the measurement equipment from the 5W, 406 MHz burst, install an RF attenuator (rated 50 ohm) between the ELT antenna output and the measurement equipment. Typical attenuation is 30 dB, 50 ohm, and rated at 5 watts for ½-second duration (see Figure 7).

Figure 7 Performance Test Setup

WARNING: Any activity that uses the beacon's own battery power will advance the internal battery usage counter. Activities other than scheduled self-tests should be performed with an external power source or an expired battery pack. It is very important to follow instructions in this manual when, during a scheduled self-test, the beacon informs the user (with seven beeps and flashes error code) to replace the battery pack. Not doing so may result in the beacon not having adequate battery pack power for at least fifty (50) hours of operation at the end of the five years of battery life.

I. 121.5 MHz Frequency Measurement and Audio Modulation Check– Items 5a and 5b

1) Connect the measuring device as specified in Figure 7.
2) Activate the ELT by placing the control switch in the "ON" position.
3) Wait three minutes.
4) Perform an Audio Modulation Check (Item 5b) during the three-minute waiting period as follows:
   a) Monitor 121.5 MHz on a suitable receiver.
   b) Listen for the downward swept tone on the receiver. The audio should "sound" like an ELT.
5) Measure the frequency. The frequency must be within the tolerance specified in Table 3.

J. 121.5 MHz Power Output Measurement – Item 5c

1) Connect the measuring device as specified in Figure 7.
2) If not activated in the previous step, activate the ELT by placing the control switch in the "ON" position and wait 3 minutes.
3) Read the displayed amplitude for 121.5 MHz. The amplitude must be within the minimum specified for 121.5 MHz in Table 3, at the terminal output.

K. 406 MHz Frequency Measurement – Item 5d

CAUTION: POWER OUTPUT IS APPROXIMATELY 5 WATTS. BE SURE ADEQUATE ATTENUATION IS INSERTED BETWEEN THE ELT AND THE MEASURING INSTRUMENT.

1) Connect the measuring device as specified in Figure 7.
2) If not activated in the previous step, activate the ELT by placing the control switch in the "ON" position and wait 3 minutes.
3) Measure the frequency after the stabilization period. The frequency must be within the tolerance specified in Table 3 on page 25.

NOTE: The exact 406 MHz frequency is printed on the ELT product label.

L. 406 MHz Power Output Measurement – Item 5e

CAUTION: POWER OUTPUT IS APPROXIMATELY 5 WATTS. ENSURE ADEQUATE ATTENUATION IS INSERTED BETWEEN THE ELT AND THE MEASURING INSTRUMENT.

1) Connect the measuring device as specified in Figure 7.
2) If not activated in the previous step, activate the ELT by placing the control switch in the "ON" position and wait 3 minutes.
3) Read the displayed amplitude of the 406 MHz burst that follows the three-minute wait period. The amplitude must be within the minimum specified for 406 MHz in Table 3, at the output terminal.
4) Deactivate the ELT by placing the control switch in the "ARM" position.

M. Current Draw Test – Item 5f

CAUTION: CONNECT EXTERNAL CURRENT METERS PRIOR TO CONNECTING TO THE BATTERY PACK.

CAUTION: EXERCISE EXTREME CAUTION TO AVOID A SHORT CIRCUIT CONDITION OF THE BATTERY PACK CONNECTIONS. THIS WILL BLOW A FUSE IN THE BATTERY PACK, FORCING REPLACEMENT.

CAUTION: ALL ON STATE CURRENT MEASUREMENTS MUST BE MADE WITH THE ANTENNA OUTPUT TERMINATED BY A 50 OHM BNC TERMINATOR.

CAUTION: THE 406 MHZ SIGNAL PULSES EVERY 50 SECONDS (APPROXIMATE) AND MAY DRAW UP TO 4 AMPERES FOR ½ SECOND. MANY METERS WILL NOT RESPOND THIS FAST OR READ THIS TYPE OF WAVEFORM ACCURATELY. BECAUSE OF THIS, ACR ELECTRONICS DOES NOT RECOMMEND MEASURING THE 406 MHZ BURST CURRENT.

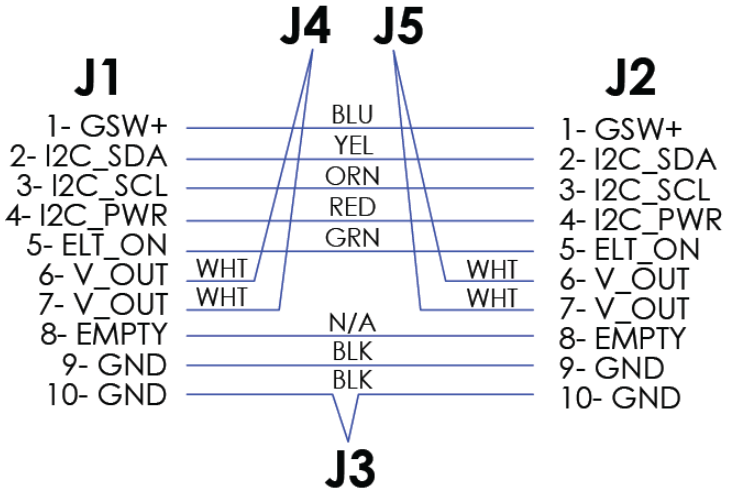

Figure 8 Current Draw Test

NOTE: This test requires two meters for measurement. One is for voltage and the other is for current measurement.

1) Ensure that UUT is in the "OFF" position.
2) Place current draw test cable (A3-06-3099) in series between main PCB (J1) and the battery PCB (J2).
3) Connect Voltmeter: positive (J5) and negative (J3).

NOTE: Connection J5 is shared between voltage and current monitoring. Use a test lead that is no longer than 1 foot long to connect J5 between voltage and current meters.

4) **Off-state current -** Connect ammeter (µA scale): positive (J5) and negative (J4). Meter should read < 5 µA.
5) **On-state current (initial)**

CAUTION: This test will use the milliamp scale. Do not leave UUT on for more than 49 seconds. If 49 seconds is exceeded, a 406 MHz burst will occur (3-6.5 amps) that may damage the ammeter.

a. Activate the UUT.
b. The volt meter will drop voltage from 6.4 (+/- 0.4) VDC to 5.80 (+/- 0.5) VDC temporarily until the systems are fully operational and then the voltage will change to 6.2 (+/- 0.1) VDC
c. The ammeter will read < 45 mA average current.
d. Turn off UUT.

6) **On-state current (ELT self-test)** – Set ammeter to the amps (A) scale and utilize the Max Hold setting. The 406 MHz burst is momentary, so the ammeter must use Max Hold to measure accurately.
   a. Place and hold the ELT to "TEST" position until LED flashes. Current will be < 6.5 amps.
7) **On-state current (406 LIVE burst and 121.5 MHz)** – Set ammeter to the amps (A) scale and utilize the Max Hold setting. The 406 MHz burst is momentary, so the ammeter must use Max Hold to measure accurately. The 121.5 MHz transmission also starts after 50 seconds.
   a. Activate UUT.
   b. Monitor ammeter. At 50 seconds, the ELT 4000 will burst. Current must be < 4 amps.

NOTE: The On-state current for a live burst will be less than the current for the self-test. This is normal operation. The standard will remain < 4 amps.

c. After 406 MHz burst, disable the ammeter Max Hold function. The 121.5 MHz transmission will now be active.
d. Monitor the ammeter. The On-state current will be <75 mA average current.
e. Turn off UUT before the next 406 MHz burst.

N. Digital Message Verification – Item 5g

1) Use ARTEX beacon readers (ARTEX P/N 453-1000, 453-2000, 8700, or 8701, or compatible tester) to test the transmitted digital message.
2) Connect the beacon reader to the ELT, per the beacon reader's instructions.
3) Perform a self-test by placing the control switch in the "SELF-TEST" position. When the LED blinks once, release the switch. Example results are shown in Figure 9. Actual messages will vary depending on the protocol and information programmed into the ELT.
   a) If the ELT is programmed with a location (long message) protocol and disconnected from the aircraft navigation system or interface device, the message will indicate "Position = Invalid" in lieu of position data, as shown in the right-hand example.

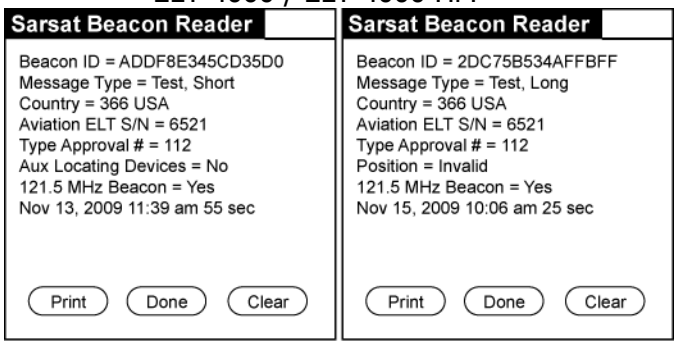

Figure 9 Short & Long 406 MHz Message Examples

O. ELT Reset Check – Item 5h

1) Place the ELT control switch in the "ON" position.
2) Return the switch to the "ARM" position.
3) If the ELT is working properly, the LED will turn off.

P. Installed Transmitter / Antenna Test – Item 6

1) Re-install the ELT in Aircraft.
2) Perform the following functional check within the first 5 minutes after the hour (UTC), as required by AC 43.13-1, Chapter 12, § 12-22, Note 3.
3) Tune an aircraft-band receiver to 121.5 MHz.

NOTE: A low-cost aircraft band radio is suggested for this test, as the aircraft Communications Transceiver is very sensitive and may pick up a weak signal, even if the antenna is disconnected from the ELT.

NOTE: THERE IS NO NEED TO ACTIVATE THE BEACON TO VERIFY 121.5 MHz PRESENCE.

4) Locate the radio approximately 20' to 30' from the antenna.
5) Perform self-test by moving the switch to "TEST" and hold until LED flashes one time, then release (move cockpit remote switch to the "TEST" position).
6) Listen for 2 audible sweeps on the receiver, which takes about 1 second.
7) Verify the buzzer sounds upon activation.
8) Note the LED activity on the cockpit remote switch. If the ELT is working properly, the LED will stay on for approximately 1 second and then turn off.
9) Refer to Table 6 if the LED displays error code flashes.

Q. Antenna Test – Item 7

1) Tune a low quality aircraft-band receiver (i.e., radio) to 121.5 MHz.

NOTE: The aircraft transceiver is not recommended for this test because it is too sensitive to verify the integrity of the antenna system, and it may pick up a weak signal even if the antenna is disconnected from the ELT. An aircraft-band radio provides a better level of confidence for this test.

2) Place the radio approximately six inches from the antenna.

3) Perform self-test by moving the switch to "TEST" and hold until LED flashes one time, then release (move cockpit remote switch to the "TEST" position).

NOTE: Perform this test within the first five minutes after the hour (UTC).

4) Listen for 2 audible sweeps on the radio, which takes about 1 second. An audible signal verifies energy is being transmitted by the antenna.

R. Inspection and Test Documentation – Item 8

1) Make an appropriate entry in the aircraft maintenance records (i.e., logbook), including the date the ELT inspection and testing was satisfactorily completed.
2) For aircraft operating under Canadian authority, follow satisfactory completion of performance testing. The date of satisfactory completion of performance testing shall be marked on the ELT external casing in a legible and permanent manner.

Fault Isolation

A. Self-Test

1) The self-test checks certain critical functions in the beacon. Results of the test are displayed by a series of indications (flash codes), where the local LED, remote switch LED and buzzer(s) activate for ½ second "ON", followed by ½ second "OFF". Multiple flash codes are separated by periods of 1 second. If no errors are present, a 2 second flash is presented as a "system ok" indication. This is suppressed if errors are present. The self-test also emits a 121.5 MHz two-cycle burst which can be monitored by an aircraft-band radio.

   It is recommended that beacon self-tests be performed on a periodic basis in accordance with local airworthiness requirements, but not to exceed the battery capacity for a maximum of 60 times during the recommended five-year life of the battery.

NOTE: Distinct indication that 406 MHz and 121.5 MHz RF power emitted is confirmed by observing any sequence of local LED pulse, remote light or buzzer, with an exception of four pulses of ½ second of the local LED, remote light, and buzzer, which indicate RF failure.

2) There are three methods of performing a self-test – one for the ELT unit switch, one for a 5-wire remote switch installation and another for the 2-wire, as follows:
   a) 5-Wire Remote Switch (2 position switch):
      1. Set remote switch to "ON" position for approximately 1 second, until LED blinks one time, then return to "ARMED" position. Error codes will begin to display after approximately 5 seconds.

NOTE: If the ELT is left activated for longer than 2 seconds, no self-test will be performed upon turn off.

   b) 2-Wire Remote Switch (3 position switch):
      1. Push switch lever to "SELF-TEST" position for approximately 1 second, until LED blinks one time, then release. Error codes will begin to display after about 5 seconds.
      2. Regardless of how long the ELT has been in the active state, no self-test is performed at turn off using the 2-wire switch.
   c) Switch located on the ELT:

1. Push switch to "TEST" position for approximately 1 second, until LED blinks one time, then release. Error codes will begin to display after about 5 seconds.

B. GNSS Test

1) The ELT software contains a "GNSS self-test" mode. The ELT design's GNSS self-test function verifies the operation of the Navigation System interface.
   a) It is recommended that beacon GNSS self-test be performed on a periodic basis for a maximum of 60 times during the recommended five-year life of the battery.

NOTE: TSO C126b requires battery capacity for a self-test to be conducted at least every six months. However, ELT 4000 has sufficient capacity to conduct a self-test monthly and a GNSS self-test monthly as required by the operator for a total maximum of 60 tests each over the five-year battery life. Actual test intervals will depend on an operator's regulatory requirements and operational preferences.

NOTE: If the beacon is serialized with User Protocol, the sequence to initiate a GNSS self-test will be ignored and a normal self-test will be initiated instead.

2) There are three methods of performing a GNSS self-test – one for the ELT unit switch, one for a 5-wire remote switch installation and another for a 2-wire remote switch installation, as follows:
   a) 5-Wire Remote Switch (2 position switch):
      1. Set remote switch to "ON" position until the LED blinks three times, then return to "ARMED" position.
   b) 2-Wire Remote Switch (3 position switch):

NOTE: The 2-wire switch LED is powered by the ELT.

      1. Push switch lever to "SELF-TEST" position until the LED blinks three times, then release.
   c) Switch located on the ELT:
      1. Set remote switch to "TEST" position until the LED blinks three times, then return to "ARMED" position.
3) The GNSS self-test will increment the GNSS self-test counter. The test will check to make sure the number of GNSS self-tests has not been exceeded. If the defined number exceeds the maximum GNSS self-test count, the GNSS self-test will not start and will be indicated with 7 beeps at the beginning of the GNSS Self-Test.
4) The processor will activate the I/O ports configured for navigation data and monitor if data is available.
5) Activation sequence: During a GNSS self-test, the switch and unit red LED shall flash (on for 140 msec) once every 3 seconds until GPS location is captured or until 10 seconds expired.
6) GNSS self-tests are limited to a maximum of 60 times on a battery pack.

NOTE: To take advantage of the position information in the GNSS self-test, a 406 MHz decoder is necessary to demodulate the signal and to obtain position information sent out by the GNSS self-test.

NOTE: Distinct indication that 406 MHz and 121.5 MHz RF power emitted is confirmed by observing any sequence of local LED pulse, remote light or buzzer, with an exception of

four pulses of ½ second of the local LED, remote light, and buzzer, which indicate RF failure.

Beeps & Flashes	Test Results	Indication
1	System OK	One pulse two seconds long of the local LED, remote light, and buzzer.
2	Programming Adapter present but not programmed Programming Adapter not present but ELT options configured for Programming Adapter. Programming Adapter serial number failed validation.	Two ½ second pulses of the local LED, remote light, and buzzer. The self-test shall check that the onboard EEPROM that stores the 32 digit 406 MHz hexadecimal messages is not empty. If a message programming block is unavailable, is empty or does not pass checksum, an error shall be indicated. If the ELT is configured for a Programming Adapter but the Programming Adapter is not detected, fail self-test. If the ELT is configured for Programming Adapter but a memory mismatch is detected, fail self-test. If the Programming Adapter memory contents and ELT memory contents are different after the ELT attempts to re-program its Non-volatile memory, this error will be displayed. Read and/or write errors from/to the Programming Adapter. The self-test shall do a validation on the Programming Adapter serial number to verify it is of the correct length and all characters are ASCII characters. No further validation of the serial number will take place.
3	Bad Antenna Load	Three ½ second pulses of the local LED, remote light, and buzzer. The self-test shall check that coaxial cable and antenna are attached to the 406 MHz output. This is typically done by measuring reflected power/VSWR to see that a 50-ohm load is attached. Tolerances shall allow for coaxial cable loss. If the 50-ohm load is not detected then an error will be indicated as mentioned above.

Beeps & Flashes	Test Results	Indication
4	Low Transmitter Power	Four ½ second pulses of the local LED, remote light, and buzzer. The self-test shall check that the 406 MHz minimum output power level is greater than 35 dBm. Example: By checking that the battery voltage at the processor reads > 487 mV, which correlates to (487mV * 781/100) = 3.80 V at V_{bat} voltage. For self-tests at very cold temperature, the V_{bat} threshold is reduced to avoid false failures. The self-test shall also check the 121.5 MHz output for presence and display an error code if not available. Threshold voltage is ≥ 600 mV for 121.5 MHz detection. PLL Lock Detect errors are also reported with this beep code. Note: Low power is suppressed if the load is bad (beep code 3 above).
5	Navigation Data	Five ½ second pulses of the local LED, remote light, and buzzer. Navigation data is not being received and beacon is programmed with location protocol. If programmed with non-location protocol, this test is not executed. ARINC navigation data will not be received without aircraft power.
6	G-Switch is not Enabled	Six ½ second pulses of the local LED, remote light, and buzzer. The G-Switch loop is not enabled.
7	Battery Life Exceeded or Low Battery Voltage	Seven ½ second pulses of the local LED, remote light, and buzzer. The self-test shall check that the ELT battery has less than one hour of use. If the Battery exceeds one hour of use an error is displayed. The self-test shall check if there are read or write errors to the non-volatile memory in the battery pack. If there are any errors an error is displayed. The self-test shall do a validation on the Battery Pack serial number to verify it is of the correct length and all characters are ASCII characters. No further validation of the serial number will take place.
8	Missing Identification	Eight ½ second pulses of the local LED, remote light, and buzzer. Data such as the S/N or tail number is missing.
9	Other Internal Error	Other unrecoverable errors are detected. If an error in this category is detected, only the 9-beep code is displayed. No other error codes are displayed.

Beeps & Flashes	Test Results	Indication
10	GNSS Test Error	Ten ½ second pulses of the local LED, remote light, and buzzer. There is no GPS data fixed during the GNSS test. This error is only indicated after a GNSS self-test, not a self-test.

Table 6 Self-test Error Codes

C. Troubleshooting

SYMPTOM	PROBABLE CAUSE	POSSIBLE SOLUTION
Remote switch LED always on (steady)	Improper wiring	Verify wiring
	Short circuit	Verify integrity of all crimp and solder connections
ELT will not turn off	**Turn ELT "OFF" using local switch – If ELT turns off:**	
	Defective remote switch harness reset circuit wiring	Check wiring continuity and repair as necessary
	Defective remote switch	Replace remote switch
	If ELT does not turn "OFF" using local switch:	
	ELT defective	Remove battery pack to disable ELT and return ELT to factory for servicing
Flash Errors	Please Refer to Table 6	

Table 7 ELT Troubleshooting Guide

1) The ARTEX ELT 4000 GPS interface is powered by the aircraft, with typical applied voltage of 28 VDC. However, ARTEX ELT 4000 will function normally by aircraft voltage as low as 14 VDC.
2) Presence of aircraft power does not influence the ARTEX ELT 4000 primary function of bursting a distress signal when activated.

REMOVAL

ELT

A. ELT Removal

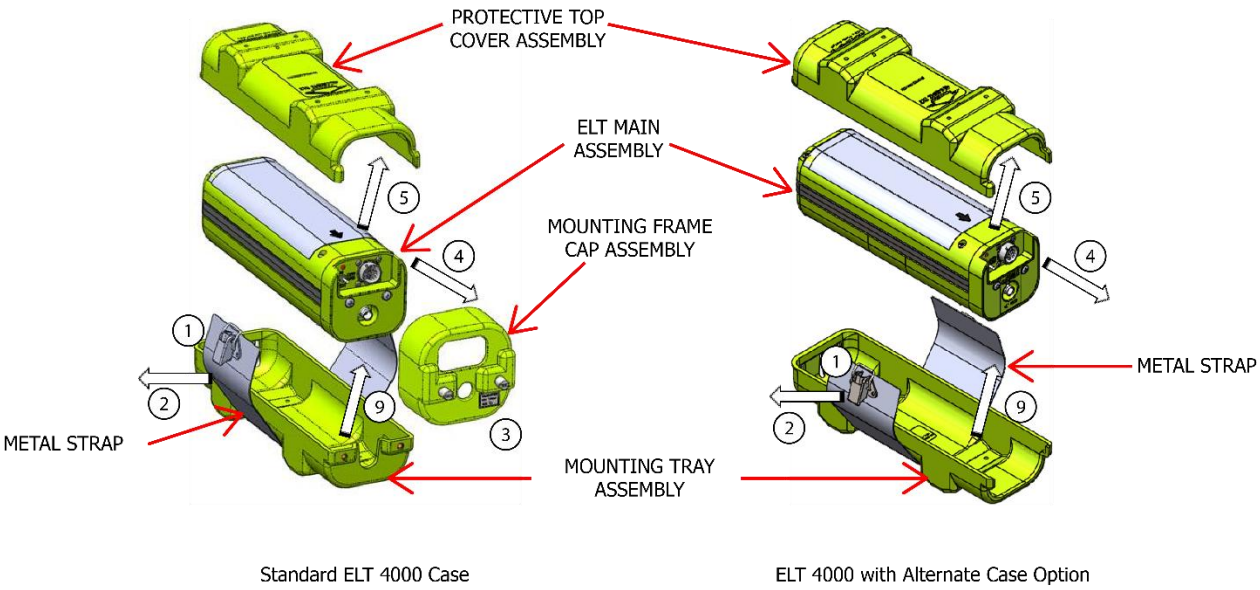

Figure 10 ELT Removal Sequence

1) Unbuckle the clasp on the metal strap.
2) Pull the metal strap apart far enough to allow for the top cover to be removed.
3) Loosen the mounting frame cap thumbscrews (if applicable).
4) Slide the mounting frame cap assembly back away from the ELT.
5) Lift the protective top cover assembly up, away from the ELT and set it aside.
6) Disconnect the coax cable from the ELT.
7) Disconnect the harness receptacle from the ELT, if necessary.

NOTE: The receptacle may disconnect when the mounting frame cap is pulled back.

8) Lift the ELT up from the connector end.

NOTE: Careful use of a flat blade screwdriver as a lever will make this step easier.

9) Slide the ELT up and out, and away from the mounting tray assembly.

Battery

A. Battery Removal

The battery is user (Owner, Pilot, and Operator) replaceable in the field. The battery contains a memory PCB that tracks the ELT elapsed on-time, activation count, self-test count and GNSS self-test count. This value is read during self-test as one factor to determine battery status.

CAUTION: THE BATTERY PACK CONTAINS ELECTROSTATIC DISCHARGE (ESD) SENSITIVE COMPONENTS AND IT MUST BE HANDLED WITH CARE. IF POSSIBLE, WEAR A GROUNDED WRIST STRAP WHEN HANDLING THE BATTERY PACK DURING INSTALLATION ACTIVITIES. TAKE PARTICULAR CARE TO AVOID TOUCHING THE EXPOSED CIRCUIT BOARD AND CONNECTOR PINS ON THE BOARD.

CAUTION: TAKE CARE NOT TO DAMAGE THE SHORT FLEX CABLE THAT CONNECTS THE BATTERY PACK TO THE ELT ASSEMBLY

1) See Figure 11.

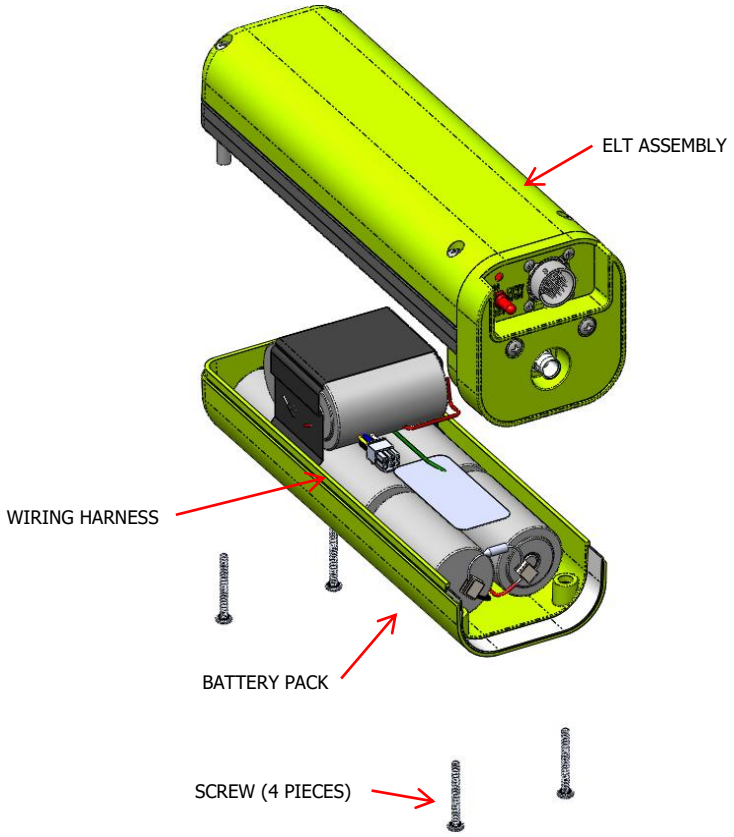

Figure 11 Battery Pack Removal

2) Lay the ELT on a surface with the battery side up, to view the embossed text "BATTERY ACCESS ON THIS SIDE".
3) Remove the four screws from the battery cover.
4) Lay the ELT on its side while keeping the ELT and battery pack securely held together.
5) Carefully separate the battery pack from the ELT, taking care not to put strain on the wiring harness.

6) Disconnect the flex cable from the small circuit board mounted in the battery pack by carefully opening the flex cable connector.
7) Dispose of batteries within the rules and guidelines of your local/regional Waste Disposal Authority.

Material or Equipment Return

A. Shipment Information

1) If any material or equipment is to be returned to the factory, under warranty or otherwise, ACR Electronics, Inc. must be notified prior to shipment with the following information:
   a) Model and serial number of equipment being returned
   b) Date purchased
   c) Date placed in service
   d) Number of hours in service
   e) Nature and cause of failure
   f) Remarks, if any

B. Return Material Authorization

1) Upon receipt of such notice, ACR Electronics, Inc. will issue a Return Material Authorization (RMA) number which then authorizes return of the material or equipment to the following address:

Repair and Overhaul

ACR Electronics, Inc.

5757 Ravenswood Road

Fort Lauderdale, FL 33312-6645, USA

Phone: (954) 981-3333

Fax: (954) 983-5087

   a) Failure to obtain an RMA number and provide the details listed above may cause unnecessary delay and/or rejection of the returned material or equipment.
   b) All material or equipment returned to the factory must be freight prepaid.
   c) Acceptable methods of shipment for international return are Airborne, Burlington Air, DHL, Emery, Federal Express, UPS International, and World Wide only.

NOTE: Do not use international commercial airlines. Such carriers may cause a loss of returned material or equipment.

Regulatory Requirements and Guidelines

A. For US Registered aircraft:

WARNING: FAILURE TO REGISTER THIS ELT WITH NOAA BEFORE INSTALLATION COULD RESULT IN A MONETARY FORFEITURE BEING ISSUED TO THE OWNER.

1) To enhance protection of life and property, it is mandatory that each 406.0-406.1 MHz ELT must be registered with National Oceanic and Atmospheric Administration (NOAA) before installation and that information be kept up-to-date. In addition to the identification plate or label requirements, each 406.0-406.1 MHz ELT is provided on the outside with a clearly discernible permanent plate or label containing the following statement: "The owner of this 406.0-406.1 MHz ELT must register the NOAA identification code contained on this label with the NOAA, whose address is:

NOAA/SARSAT Beacon Registration

NSOF E/SPO53

1315 East West Hwy

Silver Spring, MD 20910-3282

2) Aircraft owners must advise NOAA in writing upon change of aircraft or ELT ownership, or any other change in registration information. Fleet operators must notify NOAA upon transfer of ELT to another aircraft outside of the owner's control, or another change in registration information. NOAA will provide registrants with proof of registration and change of registration postcards.

B. TSO C126b, Paragraph D

1) TSO approval of the ELT does not constitute installation approval. All ELT installations are subject to field approval for a given airframe by either an approved FAA DER or FAA FSDO. For installations outside the US, contact your local civil aviation regulatory agency for details.
2) The remote switch is a requirement of TSO C126b and installation is mandatory.
3) The buzzer is a requirement of TSO C126b and installation is mandatory.

C. FAA

1) This manual constitutes supporting data, as described in AC43.9-1, Paragraph 6.h.(2) and AC 43-210, Chapter 2, Paragraph 201(a)(6), and as such may be used as support for FAA field approval of the ELT installation.
2) In addition to the procedures outlined herein and in accordance with FAR Part 43, the installer must adhere to the aircraft manufacturer's instructions and recommendations and the guidelines provided by FAA Advisory Circular AC 43.13-2 "Acceptable Methods, Techniques, and Practices - Aircraft Alterations," specifically Chapters 1 through 3, 11, and 13.
3) By signing the aircraft logbook, and FAA Form 337, the installer is stating the installation has been performed in accordance with current FAR requirements and the procedures outlined therein. The completed Form 337 is provided to the FAA and also becomes a permanent part of the aircraft maintenance records in accordance with AC43-9, Paragraph 17.

D. Canada

1) All installations must be performed in accordance with Canadian Aviation Regulations (CAR) Part V, Chapter 551, § 551.104.

E. Other Countries

1) Installations in aircraft outside of the United States and Canada must be performed in accordance with applicable regulatory authority rules and regulations.

F. RTCA

1) DO-204A, § 3.1.8 guidelines for mounting an ELT:
   a) The ELT unit shall be mounted to primary aircraft load-carrying structures, such as trusses, bulkheads, longerons, spars, or floor beams (not aircraft skin) or a structure that meets the requirements of the following test.
   b) The mounts shall have a maximum static local deflection no greater than 2.5 mm when a force of 450 newtons (100 lbf) is applied to the mount in the most flexible direction. Deflection measurements shall be made with reference to another part of the aircraft not less than 0.3 meters or more than 1.0 meters from the mounting location.
2) DO-182, § 6.2.2.b recommends that:
   a) To maximize the probability of the ELT transmitting a detectable signal after a crash, all ELT system components, which must survive a crash intact, e.g. transmitter and external antenna, should be attached to the airframe in such a manner that the attachment system can support a 100 g load, (ELT weight x 100, ELT antenna weight x 100, etc.) applied through the center of gravity of the component (ELT, antenna, etc.) in the plus and minus directions of the three principal axes of the aircraft.
   b) Post-crash critical components of the ELT system, e.g. transmitter and external antenna, should be mounted as close to each other as possible.
   c) The antenna coax cable should not cross any production breaks, e.g., major structure sections, such that the ELT and antenna are in the same section of the aircraft and as close together as possible.
   d) If the ELT and external antenna are on opposite sides of an airframe production break, the components should be secured to each other by a tether that can support a 100 g load (ELT weight x 100). The interconnecting antenna-to-ELT coax cable should have sufficient slack on both ends that it will not be subjected to any tensile load and should be tied loosely to the tether.

Mounting Tray

A. Location

CAUTION: MANY ORIGINAL ELT INSTALLATIONS ARE INADEQUATE AS FAR AS UNIT LOCATION AND SURFACE RIGIDITY ARE CONCERNED. BECAUSE OF THE CRITICAL FUNCTION AN ELT PERFORMS, IT IS IMPORTANT THE INSTALLATION FOLLOWS THE INSTRUCTIONS AND RECOMMENDATIONS HEREIN.

CAUTION: THE MOUNTING SURFACE MUST BE EXTREMELY RIGID. MOUNTING AN ELT DIRECTLY TO THE AIRCRAFT SKIN, FOR EXAMPLE, IS UNACCEPTABLE.

CAUTION: AVOID LOCATING THE ELT WHERE IT WILL BE SUBJECTED TO UNPROTECTED EXPOSURE TO HARSH CHEMICAL FLUIDS SUCH AS DEICING COMPOUNDS. THESE TYPES OF CHEMICAL FLUIDS CAN PROMOTE CRACKING AND FRACTURING OF THE ELT MOUNTING FRAME AND HOUSING COMPONENTS BY DEGRADING THE STRUCTURAL INTEGRITY OF THESE COMPONENTS. THESE SAME CHEMICAL AGENTS MAY ALSO CAUSE CORROSION OF ELECTRICAL CONNECTIONS.

NOTE: Statistics show that the tail section of an airplane is likely to be less damaged during a crash; therefore, this area provides a good mounting environment for the ELT.

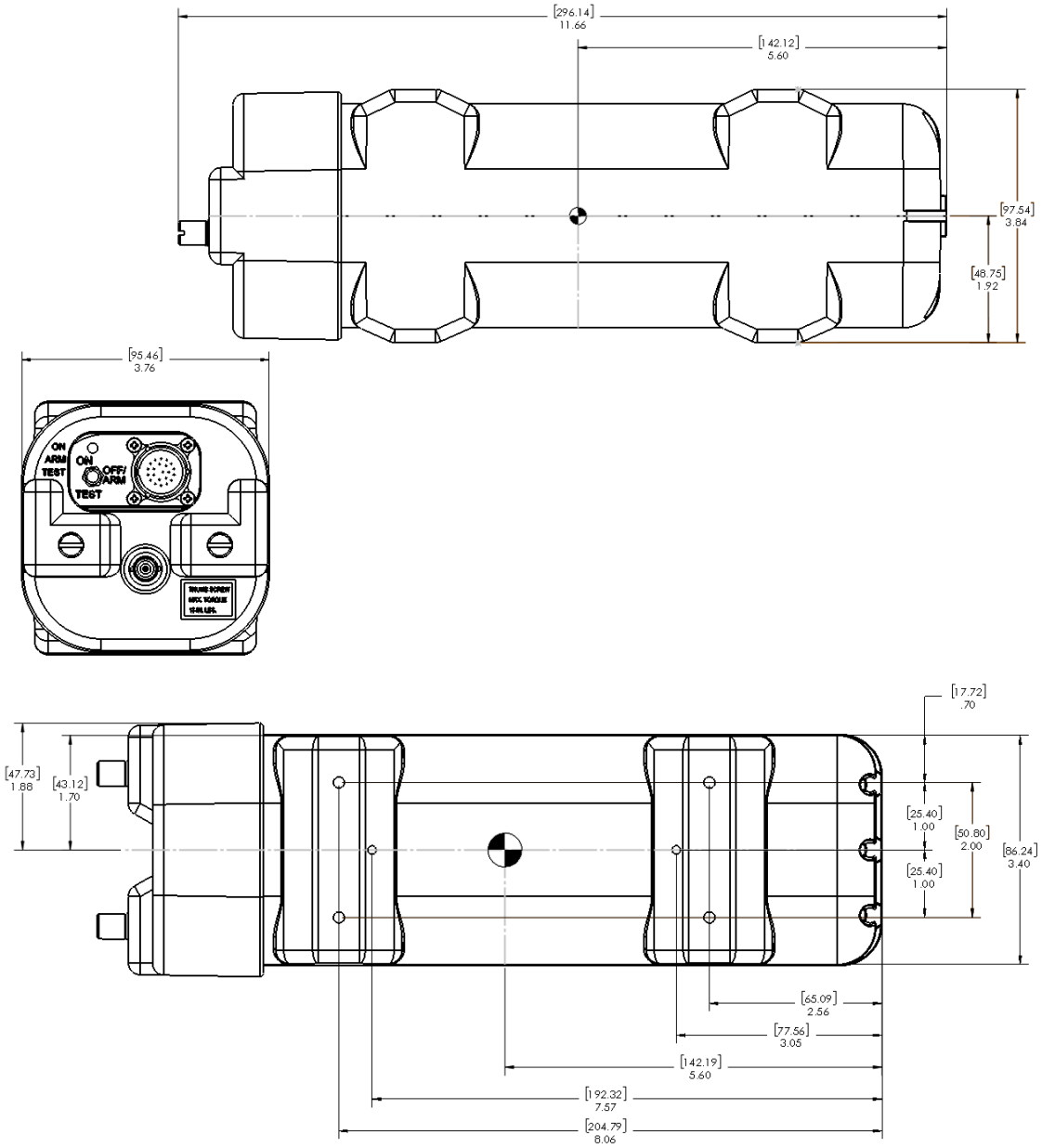

Figure 12 ARTEX ELT 4000 Outline and Dimensions - Standard Case Option

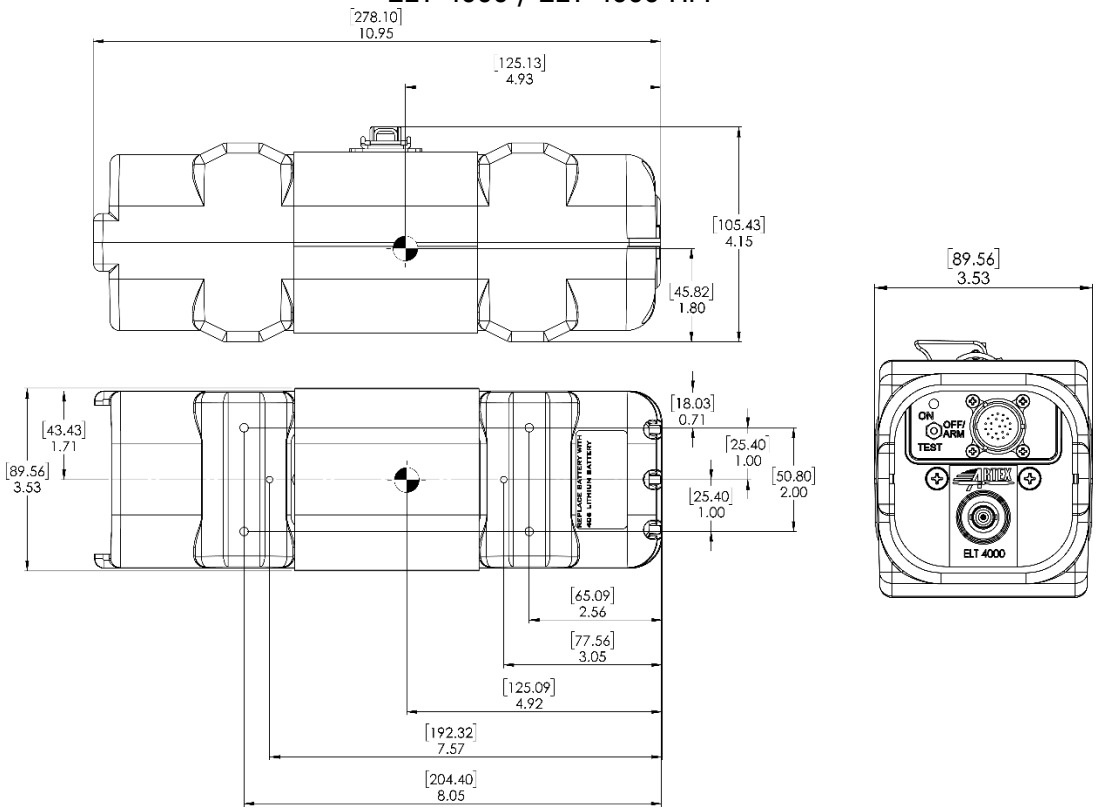

Figure 13 ARTEX ELT 4000 Outline and Dimensions – Alternate Case Option

1) Select a suitable location for the ELT mounting tray (see Figure 12 and Figure 13).
2) Mount the ELT as far aft as practical, but where it can be easily retrieved for maintenance.
3) Additional installation guidance may be found in AC 43.13-2, Chapter 2, § 28, which specifically addresses ELT installations.

B. Installation

1) See Figure 14.

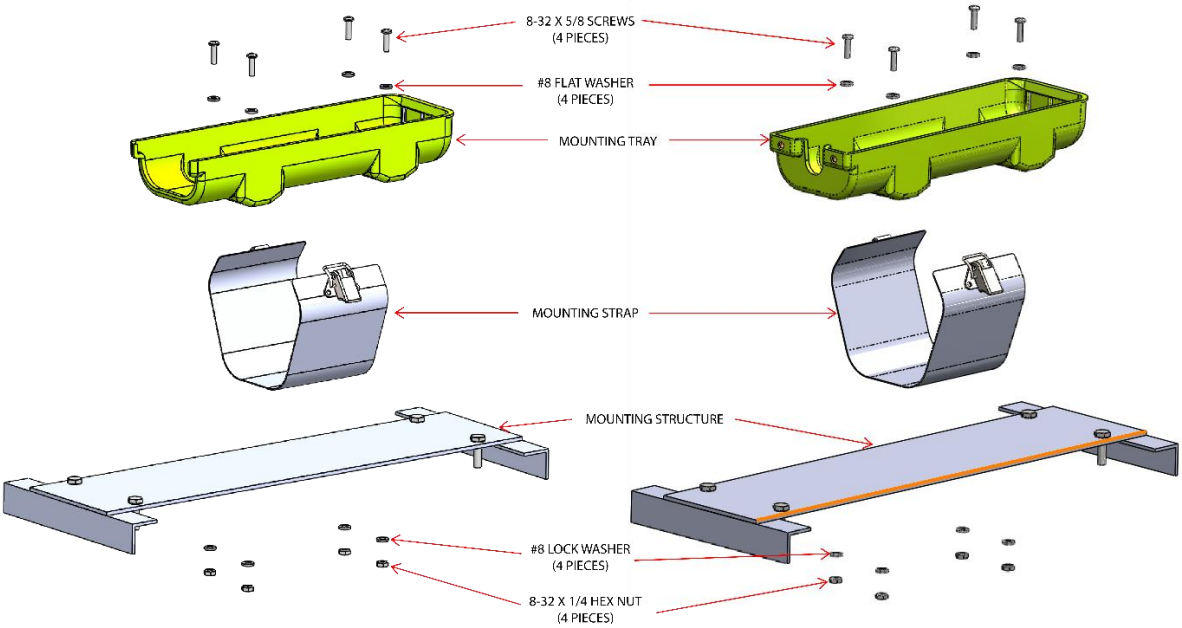

Figure 14 Typical Mounting Assembly Installation

2) Install the necessary mounting structure as appropriate.
3) Align the mounting tray sub-assembly (452-5050-1/452-3052-3) on the mounting structure, such that the arrow on the tray is within 10° of the longitudinal axis of the aircraft and pointing in the direction of flight.
4) Mark and drill the four mounting holes with a #19 or 4.25 mm drill. Refer to Figure 12 and Figure 13 for the mounting hole pattern.

NOTE: Utilize a minimum of four mounting holes to suit installation location.

5) Install the mounting tray as shown in Figure 14.
6) Torque screws to 12±1 lb-in (136 ±11 N•cm).

Antenna

A. General

1) Use only antennas approved for use with the ARTEX ELT 4000. The ELT will not work properly without being connected to an antenna for which it was designed.
2) Verify the antenna selected matches the requirements of the specific installation. Considerations include aircraft maximum rated speed, location restrictions, and any other considerations specific to the installation.
3) Per FAA TSO C126b, ELTs must be installed with only the components that have been certified by either the manufacturer of the unit or via a Type Certificate authorization done by the airframe manufacturer. Contact ARTEX Technical Support for further information regarding component and accessory selection.

B. Location

1) Select a suitable location for the antenna.
   a) Place the antenna in a location where the antenna can be installed vertically and with at least 32 inches (0.8 m) of clearance from other antennas, particularly VHF, in accordance with RTCA/DO-204, § 3.1.10.2.

NOTE: Detailed location guidance may be found in AC 43.13-2, Chapter 3, which recommends a minimum distance of 36 inches (0.9 m) clearance between antennas.

C. Installation General Info

NOTE: Per FAA TSO C126b, "Those installing this article, on or in a specific type or class of aircraft, must determine that the aircraft installation conditions are within the TSO standards. TSO articles must have separate approval for installation in an aircraft."

CAUTION: ARTEX (ACR ELECTRONICS, INC.) CANNOT VERIFY APPROPRIATE ANTENNA SELECTION PER EACH AIRFRAME. MANY CONSIDERATIONS MUST BE EVALUATED DURING THE ANTENNA SELECTION PROCESS, SUCH AS DYNAMIC / STATIC LOADING. CERTAIN SPECIAL CONSIDERATIONS NEED TO BE ACCOUNTED FOR SUCH AS AIRFLOW SPEED OVER THE ANTENNA SURFACES (FRONTLOAD / SIDELOAD). CONSULT FAA AC 43.13-2 AND AIRFRAME MANUFACTURER FOR ANTENNA INSTALLATION PRACTICES AND REQUIREMENTS. CONTACT ARTEX TECHNICAL SUPPORT FOR MORE INFORMATION.

WARNING: PER FAA AC 43.13-2: "PAINTING AN ANTENNA OR APPLING PROTECTIVE COATINGS OR DEVICES THAT ARE NOT APPROVED ARE NOT ALLOWED [UNDER THIS AC]. PAINT IS AN RF DE-TUNER. IF AN ANTENNA IS PAINTED IN THE FIELD, PAINT TYPE AND PAINT THICKNESS PRESENT UNCONTROLLED VARIABLES THAT WILL AFFECT AN ANTENNA'S PERFORMANCE AND MAY RESULT IN THE ANTENNA NO LONGER MEETING ITS SPECIFICATIONS OR TECHNICAL STANDARD ORDER (TSO)." **ARTEX (ACR ELECTRONICS, INC.) DOES NOT AUTHORIZE OPERATORS OR OUTSIDE MAINTENANCE ORGANIZATIONS TO PERFORM FIELD REPAIRS OR PAINTING.** CONTACT ARTEX TECHNICAL SUPPORT FOR MORE INFORMATION.

NOTE: Refer to the airframe manufacturer's written instructions and AC 43.13-2, Chapter 3 for antenna installation practices and requirements.

1) Prepare antenna mounting surface to ensure good ground contact.
2) Drill the antenna mounting holes and coax connector hole referring to the appropriate antenna illustration for hole patterns and hole sizes. See Figure 15, Figure 16, and Figure 17. Tighten mounting screws in accordance with the installation notes in the antenna drawing.
3) Apply a small fillet of RTV sealant around periphery of antenna base to protect against moisture.
4) A coax cable, 6 feet (1.8 m) long, is provided as part of the ELT kit.

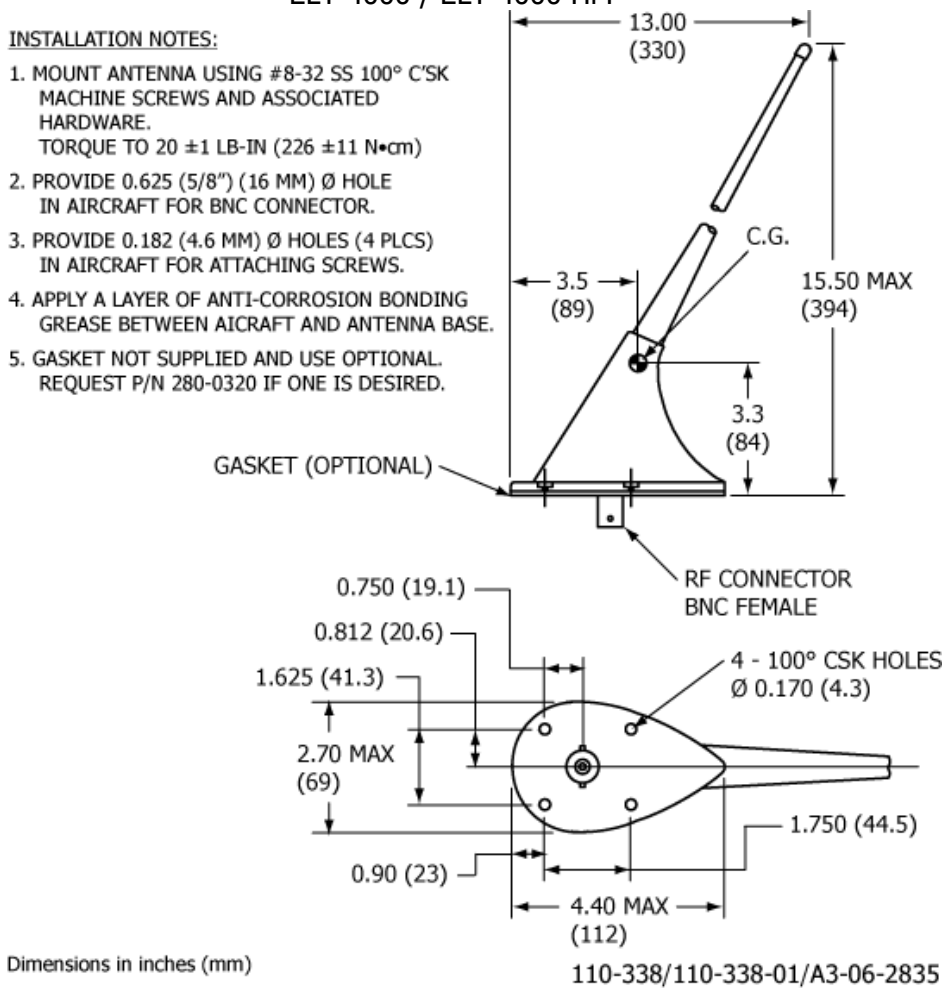

Figure 15 Rod Antenna 110-338/110-338-01/A3-06-2835 Outline and Dimensions

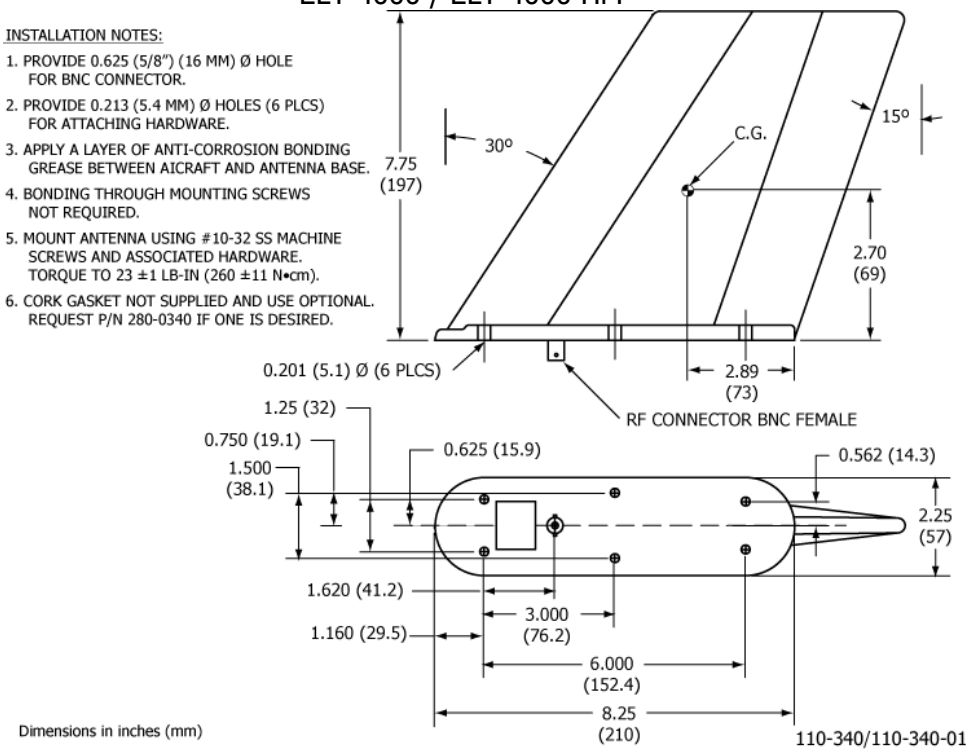

Figure 16 Blade Antenna 110-340/110-340-01 Outline and Dimensions

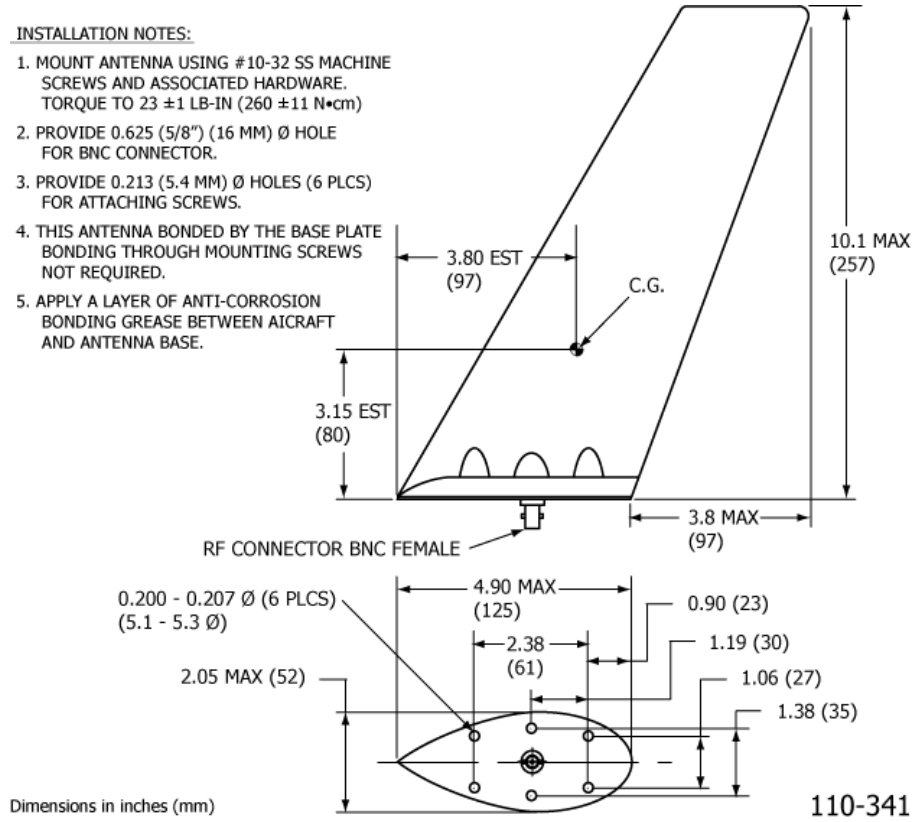

Figure 17 Blade Antenna 110-341 Outline and Dimensions

Remote Switch

A. Location

NOTE: The ELT 4000 can be installed using any of the remote switches listed in the table on page 2 of this manual. Note that the 2-wire remote switch does not require a connection to the aircraft power to operate. For aircraft specific control panels not listed here, please consult with ACR.

1) Select a suitable switch location in the cockpit. The switch needs to be visible and accessible, where the pilot can easily reach the switch and notice the indicator LED.
2) The switch assembly requires a panel area of approximately 2.0 x 1.3 in. (51 x 33 mm). Figure 18, Figure 19, and Figure 20 show the dimensions for each switch. The clearance behind the panel must allow for the mating connector and harness wires, as well as the switch depth.

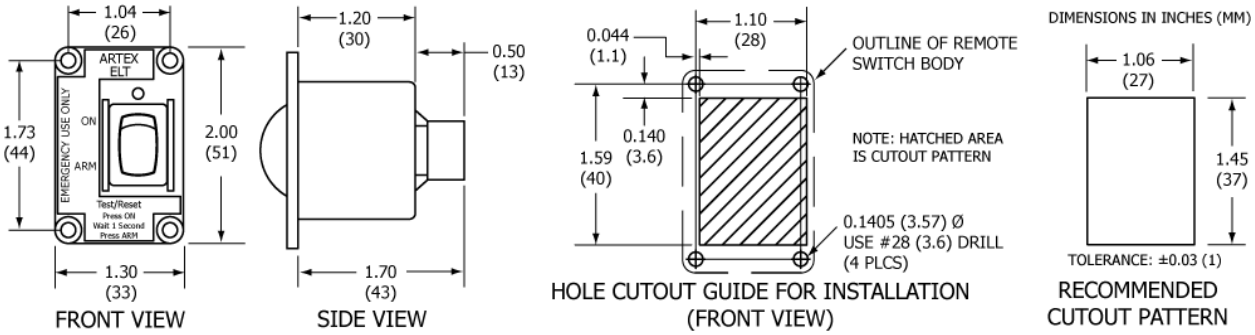

Figure 18 5-Wire and 2-Wire (A3-06-2759) Remote Switch Outline and Dimensions

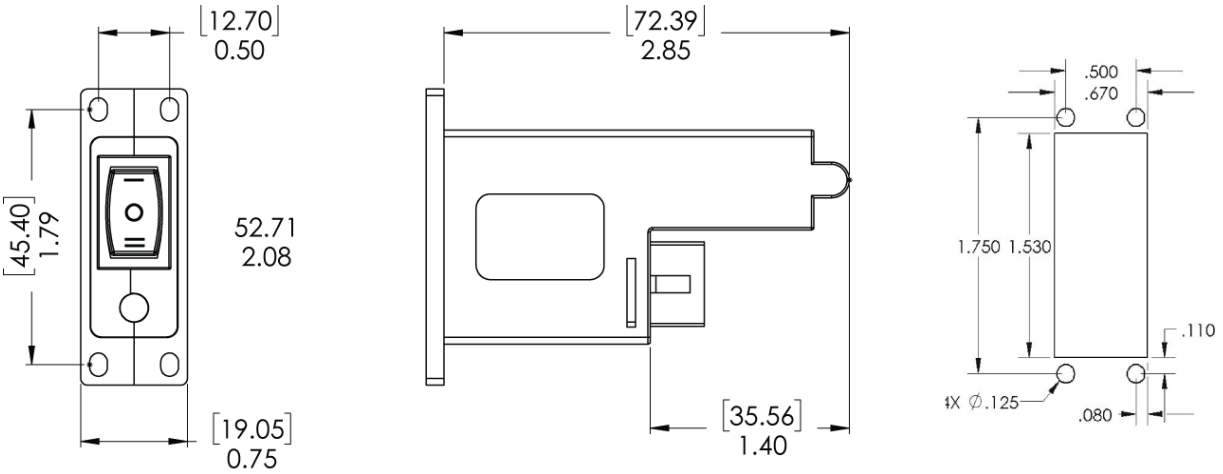

Figure 19 2-Wire (A3-06-3214) Remote Switch Outline and Dimensions

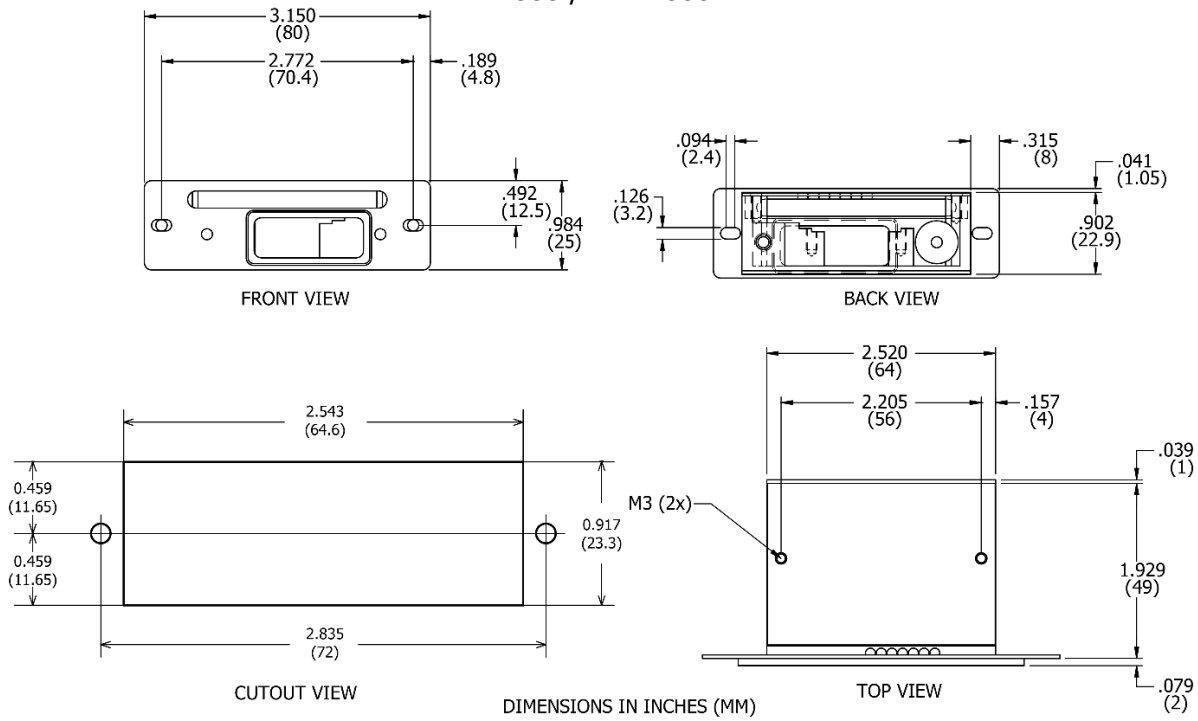

Figure 20 2-Wire (A3-06-3216) Remote Switch Panel Outline and Dimensions

B. Installation

1) Mark the cutout on the cockpit panel.
2) Fit the switch assembly into the cutout and mark the four screw holes, then remove the switch.
3) Drill the screw holes with a #28 or 3.6 mm drill.
4) Install the switch assembly using the hardware provided in the remote switch installation kit (ARTEX P/N 455-6196, A3-06-2759, or A3-06-3214).
5) Apply the "For Aviation Emergency Use Only/Unauthorized Use Prohibited" placard (ARTEX P/N 591-0428, included in 455-6196, A3-06-2759, and A3-06-3214 installation kits).
6) A remote switch is a requirement of RTCA DO-204a and TSO C126b.

Buzzer

A. Location

CAUTION: **THE BUZZER PRODUCES A LOUD, SIREN-TYPE SOUND WHEN THE ELT IS ACTIVATED AND SHOULD BE LOCATED IN A POSITION THAT WILL NOT DISTRACT THE COCKPIT CREW DURING FLIGHT CONDITIONS, BUT WILL BE AUDIBLE DURING GROUND OPERATIONS AND SERVICING WHEN THE ENGINE(S) ARE NOT OPERATING.**

1) Select a suitable location for the buzzer.

NOTE: The buzzer may be located anywhere in the aircraft; however, the recommended location is near the ELT, as the buzzer is loud enough to be heard outside the aircraft when the engine(s) is not running. When the engine(s) is running, the LED on the cockpit remote switch assembly will warn the pilot the ELT is active.

B. Installation

1) Refer to AC 43.13-2 for fabrication and installation guidance.

2) Fabricate a support bracket for the buzzer. See Figure 21.
3) Mount bracket and install buzzer. Either the panel mounting nut or flanges can be used to mount the buzzer.

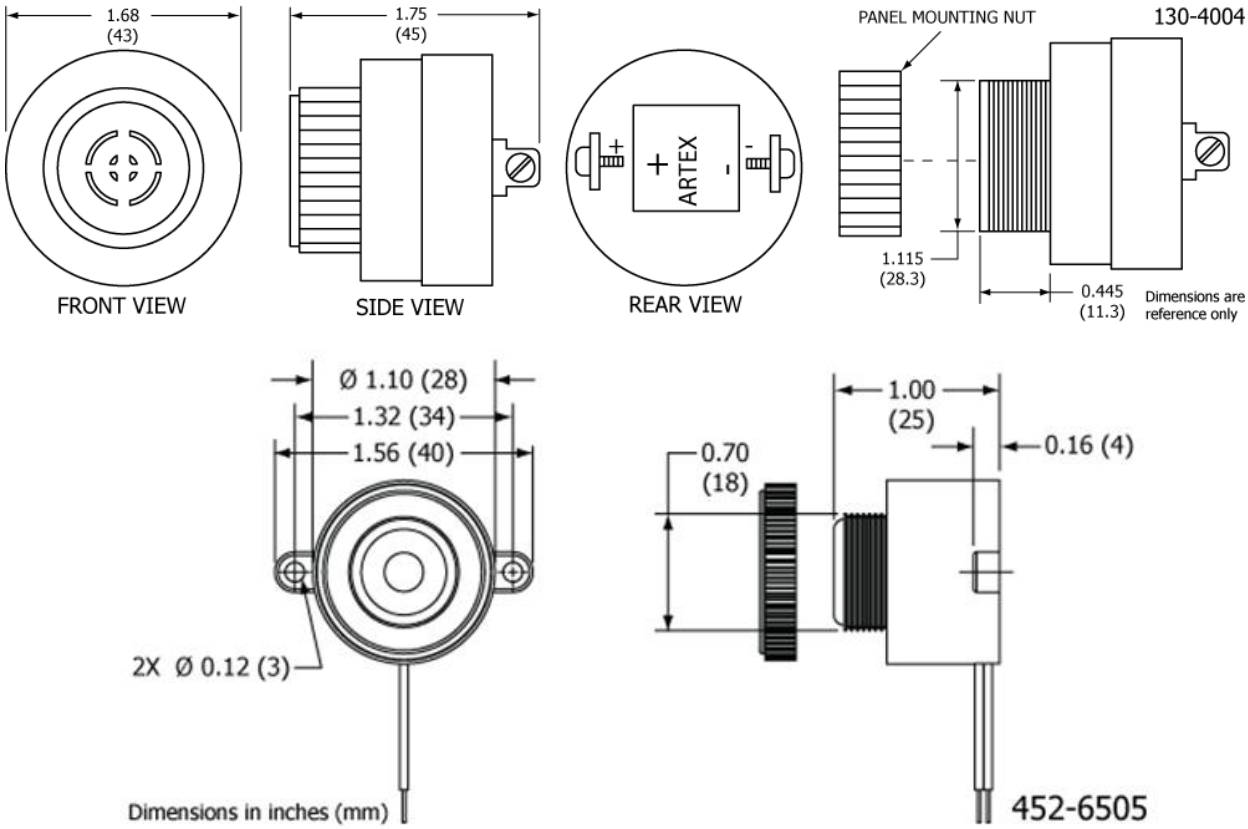

Figure 21 Buzzer Outline and Dimensions

Wiring

A. General Considerations and Recommendations

CAUTION: IF GROUND OR OTHER CONNECTIONS ARE BROKEN OR OTHERWISE DAMAGED, THE ELT IS STILL CAPABLE OF AUTOMATIC ACTIVATION. HOWEVER, THE COCKPIT REMOTE SWITCH MAY BE INCAPABLE OF RESETTING THE ELT AND OPERATION MAY NOT BE INDICATED ON THE REMOTE SWITCH LED.

CAUTION: INCORRECT TERMINATION OF THE WIRING IN THE CONNECTORS MAY DAMAGE THE ELT, CAUSE TRANSMISSION ISSUES, OR RESULT IN A NON-FUNCTIONING REMOTE SWITCH. VERIFY THE WIRING AGAINST THE WIRING DIAGRAM AND PERFORM A CONTINUITY CHECK TO CONFIRM GOOD CONNECTIONS AND PROPER PIN LOCATIONS.

CAUTION: TO PREVENT INADVERTENT ELT ACTIVATION OR POSSIBLE COMPONENT DAMAGE, DO NOT CONNECT THE HARNESS TO THE ELT OR COCKPIT REMOTE SWITCH UNTIL ALL POWER AND GROUND WIRING CONNECTIONS ARE COMPLETED.

1) The following wiring and grounding considerations and recommendations are applicable:
   a) Minimum 22 AWG wire size.
   b) Shielding is recommended to help prevent EMI and RF interference.
   c) Use high quality conductor meeting MIL-W-16878, M22759, M27500, or a commercial equivalent acceptable for use in aircraft applications.
   d) Provide a "Drip Loop" in the remote switch harness connection to the ELT to divert moisture from the connector.
   e) Provide a "Service Loop" in the remote switch harness connection to the remote switch assembly, such that the assembly can be withdrawn from the panel far enough to easily disconnect the harness plug.
   f) For 5-wire remote switch installations, ELT and remote switch grounds must be common to aircraft ground and should be less than 10Ω.
2) Refer to the following schematics for suggested installation wiring:

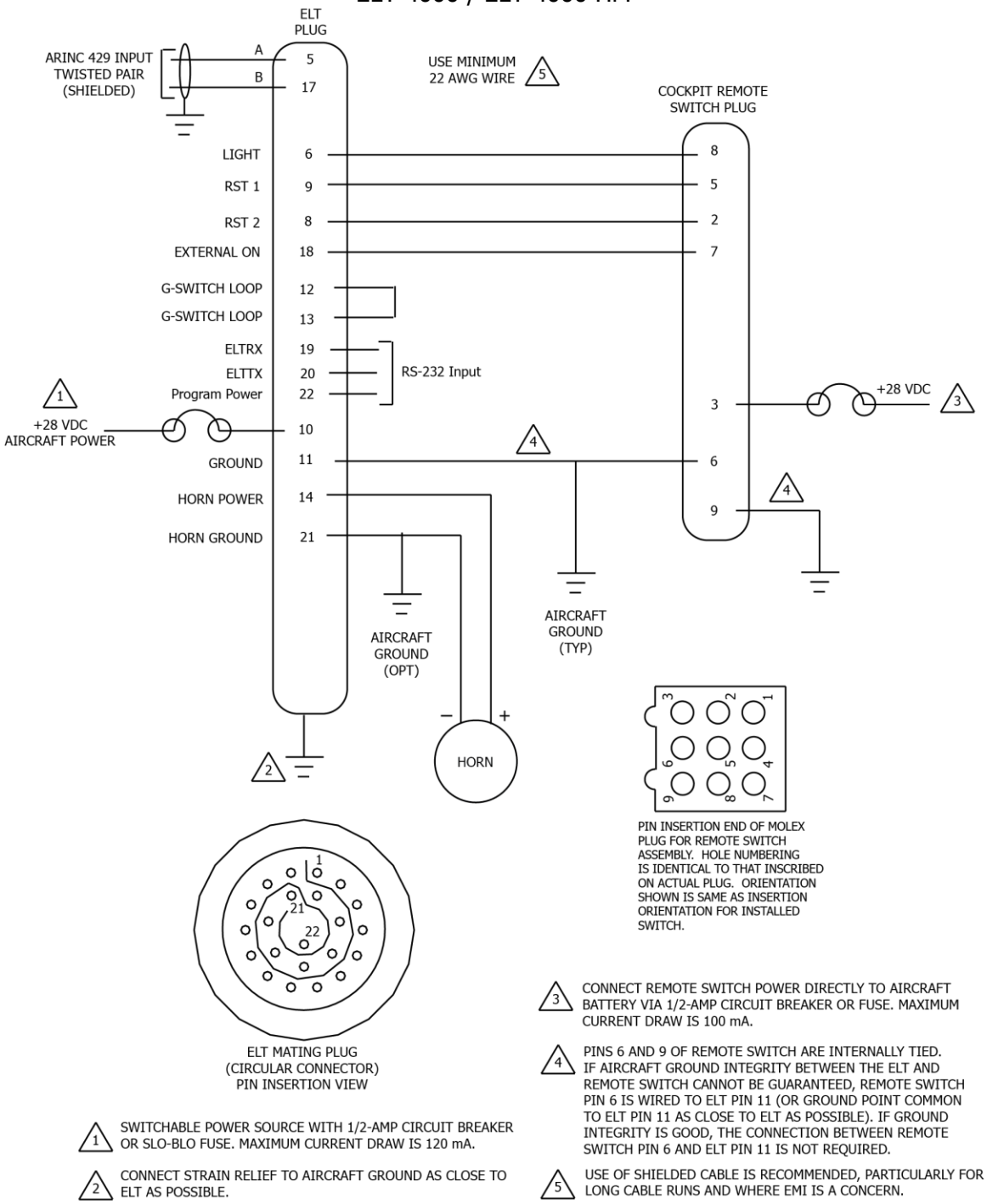

Figure 22 5-Wire Remote Switch Harness Wiring Diagram

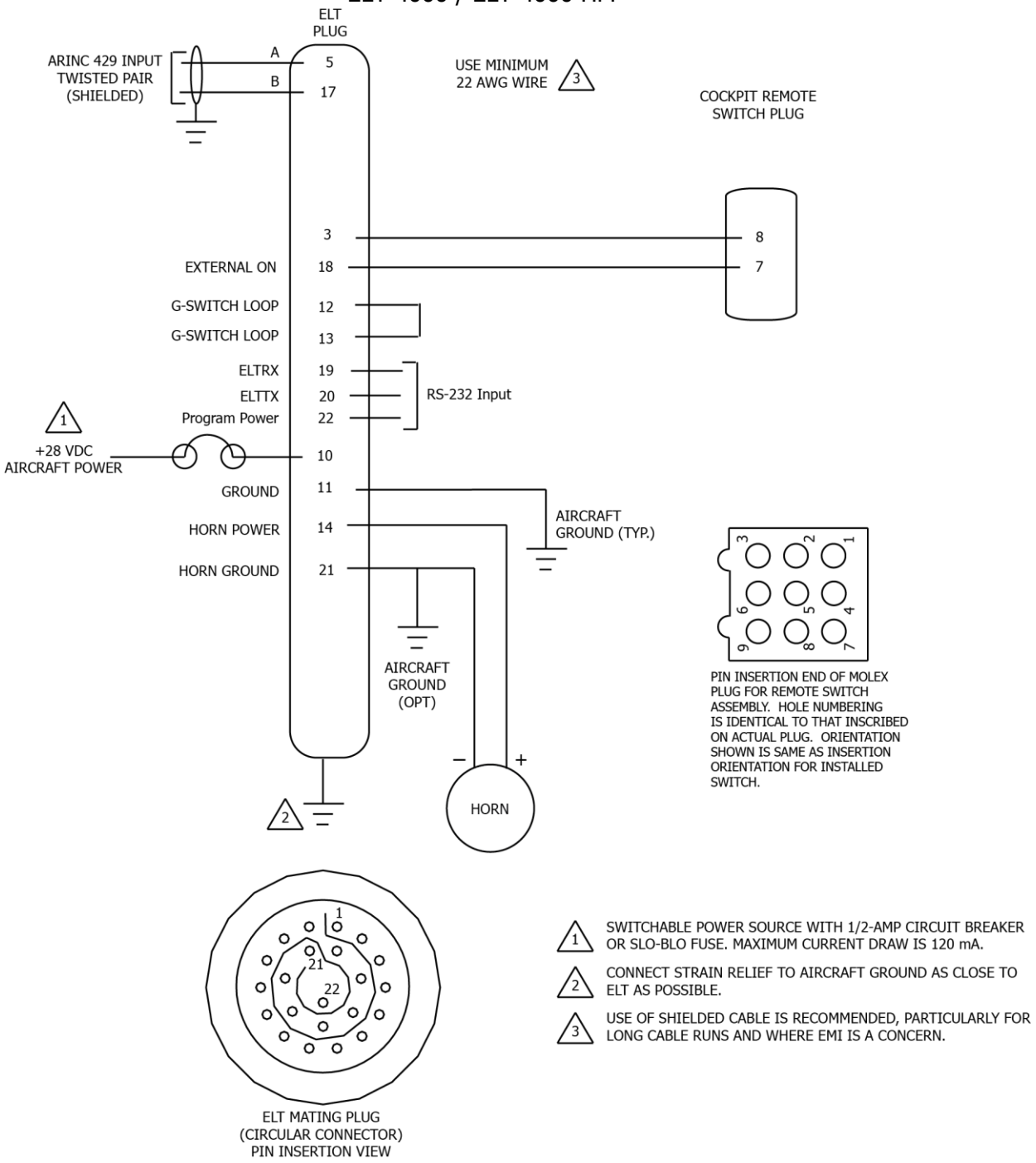

Figure 23 2-Wire Remote Switch (P/N A3-06-2759 and slim switch A3-06-3214) Wiring Diagram

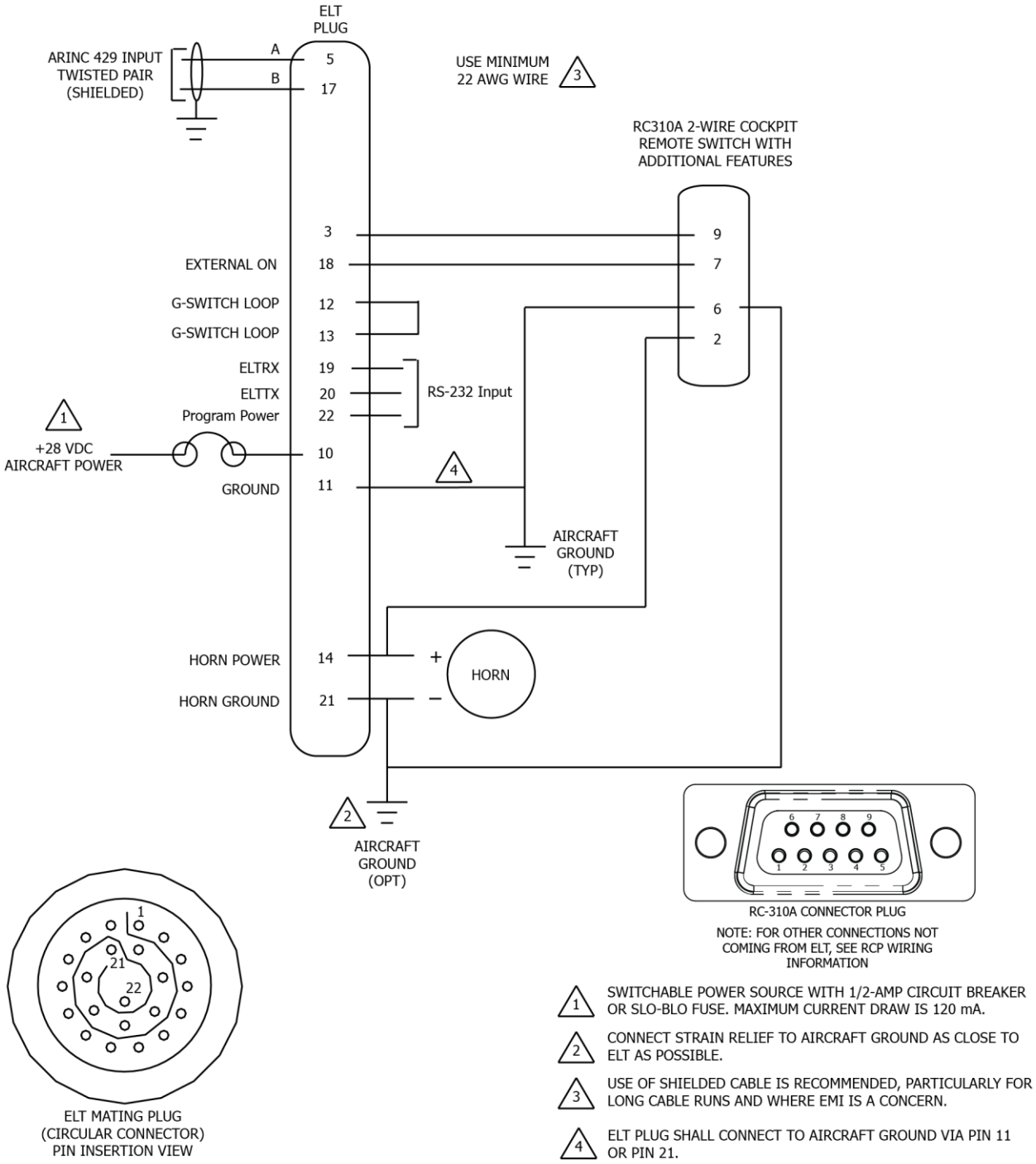

Figure 24 2-Wire Remote Control Panel (P/N A3-06-3216) Wiring Diagram

B. Remote Switch Harness Fabrication

1) 5-Wire Remote Switch ONLY:
   a) Fabricate the following wires.
      1. Fabricate a ground wire long enough to reach from Pin 11 of the harness ELT plug to aircraft ground.

NOTE: This wire will be crimped in the same pin as the wire running from Pin 11 of the ELT plug to the cockpit remote switch plug Pin 6, if the Pin 11 to Pin 6 connection is required. See Note 4 in Figure 22. Alternatively, the wires may be spliced in a manner acceptable to the aircraft manufacturer, or as described in AC 43.13-1, Paragraph 11-167.

      2. Fabricate a ground wire long enough to reach from Pin 9 of the remote switch plug to aircraft ground.
      3. Fabricate a ground wire long enough to reach from the harness ELT plug strain relief to aircraft ground.
      4. Fabricate a power wire long enough to reach from the remote switch plug (Pin 3) to a +28 VDC battery power source.
      5. Fabricate a power wire long enough to reach from the ELT plug (Pin 10) to a +28 VDC power source.
      6. Fabricate two wires of sufficient length to reach from the harness ELT plug, pins 14 & 21, to the buzzer.

NOTE: These wires provide power and ground for the buzzer. Use appropriate means of identification for the wires, such that the wires can be readily identified.

2) 2-Wire/2-Wire Slim Remote Switch ONLY:
   a) Fabricate a wire long enough to reach from the ELT plug (Pin 18) to remote switch plug (pin 7).
   b) Fabricate a wire long enough to reach from the ELT plug (Pin 3) to remote switch plug (pin 8).
3) RC310A 2-Wire Remote switch with additional features Remote Switch:
   a) Fabricate a wire long enough to reach from the ELT plug (Pin 18) to remote switch plug (pin 7).
   b) Fabricate a wire long enough to reach from the ELT plug (Pin 3) to remote switch plug (pin -9).
   c) Fabricate a wire long enough to reach from the ELT plug (Pin 11 either or Pin 21) to remote switch plug (pin 6).
   d) Fabricate a wire long enough to reach from the ELT plug (Pin 14, connected also to Horn positive terminal) to remote switch plug (pin 2).

4) Prepare the wires as follows:
   a) Strip approximately 0.15 in. (3 mm) of insulation from the remote switch wire ends and 0.19 in. (5 mm) from the ELT wire ends.
   b) Dress and tin the bare wires to prevent the strands from fraying during terminal crimping operations.

5) Crimp contact sockets (151-6657) on the harness wire ends at the ELT, as follows:

NOTE: Use crimp tool M22520/7-01 and die M22570/7-06, or equivalent.

   a) Pin 6 can be connected to either pin 11 or 21 (both are ground connections). If needed, both will terminate in Pin 6. See Figure 23 or Figure 24, depending on the switch used. Make a note of the wire identification for later reference.
   b) One of each of the remaining wires with the ends at the harness ELT end.
   c) The +28 VDC switchable power source wire.
   d) The buzzer power and ground wires.
   e) On each of the twisted pair ARINC 429 input wires.
6) Crimp appropriately sized ring terminals on the airframe ends of the following wires:
   a) Harness ELT plug Pin 11 ground wire.
   b) Harness ELT plug strain relief ground wire.
   c) Remote switch plug ground wire.
7) Crimp appropriately sized ring terminals on the airframe ends of the following wires:

NOTE: If desired, the power wires may be spliced or otherwise connected to their individual power sources in a manner acceptable to the aircraft manufacturer, or as described in AC 43.13-1, Paragraph 11-167.

   a) Harness ELT plug +28 VDC switchable power source wire. Use a power source controlled by the avionics switch or master switch. This circuit draws power at all times and will drain the battery if not switched off.
   b) Harness remote switch plug +28 VDC battery power source wire. This power source must be direct from the battery. Use the clock circuit or a similar source of battery power.
8) Provide a means of termination on the airframe end of the ARINC 429 twisted pair of wires compatible with the aircraft navigation system ARINC 429 output source.
9) For 5-Wire Remote Switch, 2-Wire Remote Switch and 2-Wire Remote Slim Switch: Crimp female terminal pins (151-6628) to the cockpit remote switch end, as follows:

NOTE: Use Molex crimp tool 63811-3300, or an equivalent tool for 0.062 in. terminal pins.

10) For RC310A 2-Wire Remote switch with additional features: Solder the wiring to the D-Sub plug as follows, referring to the wiring diagram appropriate for the installation:

NOTE: Artex supplies a DB9 female solder contact connector with all 4000/4000M ELT kits. If a crimp contact connector is preferred, it is acceptable to purchase and use an alternate DB9 crimp contact connector. Ensure it conforms to MIL-C-24308 or other commercial specification to ensure performance requirements are met.

   a) Each harness wire.
   b) Remote switch ground wire.
   c) Remote switch +28 VDC battery power wire.

d) Harness wires.

NOTE: Make note of the wiring identification and pin location relationships, such that the wiring at the remote switch end can be terminated correctly.

e) Buzzer power wire.
f) Ground wire.

11) Bundle the wiring into a complete harness, with breakouts as appropriate, such that the wiring can be properly supported and attached to the airframe. Refer to the aircraft manufacturer's written instructions or AC 43.13-1, Chapter 11, § 9 through 12, as applicable.

C. ELT 22-Pin Plug Installation

1) Refer to Figure 25 below.

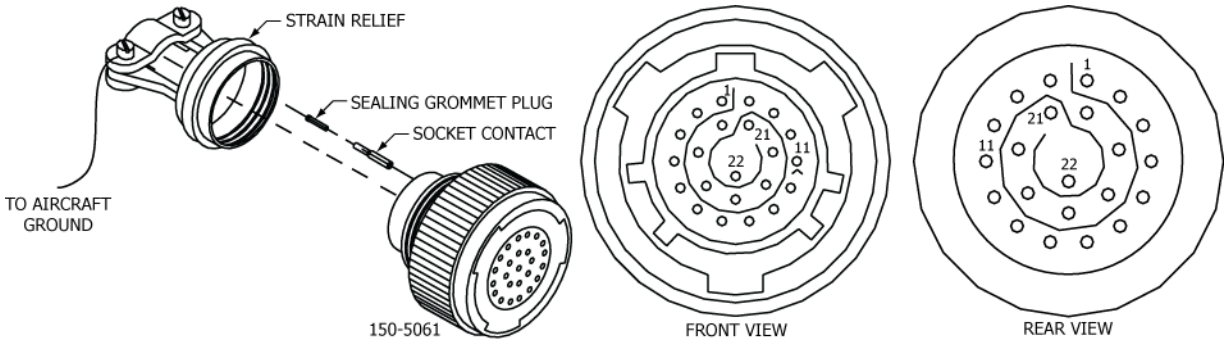

Figure 25 Harness ELT 22-Pin Plug Arrangement

CAUTION: THE ELT WILL NOT AUTOMATICALLY ACTIVATE IF THE JUMPER G-SW LOOP IS NOT PROPERLY INSTALLED IN THE ELT CIRCULAR CONNECTOR.

a) Note the pin locations of the harness circular connector plug and crimp the connectors onto the wires.
b) Install the wires, with crimp connectors, into the appropriate pin location (referring to the appropriate wiring diagram).
c) Re-seat the connector.
d) Install the sealing plugs in the pin locations that are not being used.
e) Install the strain relief onto the back of the connector, and then tighten the clamp around the harness.

2) Cockpit Remote Switch 9-Pin Plug Installation

a) Insert the wiring pins into the Molex 9-pin cockpit remote switch plug (151-5009), referring to the wiring diagram for the appropriate remote switch.

NOTE: Terminal pins may be removed from the plug using Molex extraction tool 11030002, or equivalent.

3) Antenna Connection

a) Install the optionally supplied coax cable to the antenna. Custom length coax cable may be fabricated if the optionally supplied cable is not suitable. ACR suggests using RG-142 or equivalent coax cable, with an allowable insertion loss between 0.4 dB and 1.0 dB.

4) Cockpit Remote Switch Power Connection

a) For 5-wire remote switch installations, connect the appropriate (14V or 28V) remote switch power wire to the battery using a 1/2 Amp in-line circuit breaker; or an alternate un-switched source (e.g., aircraft clock circuitry). Splicing guidelines can be found in AC 43.13-1, § 13.

NOTE: The power source is required only for the remote switch LED and has no effect on switch functions. The switch will control the ELT with or without power.

5) Airframe Ground Connections

a) Connect the ground wires to the airframe as described in AC 43.13-1, Chapter 11, § 15, as applicable.

ELT Installation and Test

A. Harness ELT Circular Connector Sealing

1) After system operation is verified, with no errors displayed, it is suggested that the harness connector to the ELT be sealed against moisture. This is best accomplished by encapsulating the exposed connections in silicone sealant. ACR recommends Dow Corning® 4 Electrical Insulating Compound or an equivalent meeting SAE AS-8660 (MIL-S8660C).

a) Disconnect the remote switch harness circular plug from the ELT.

b) Separate the circular connector strain relief from the connector.

c) Inject sealant into the back side of the plug, so that sealant surrounds all exposed electrical connections and the back of the plug.

d) Re-seat the circular connector strain relief to the connector.

e) Coat the mating pins/receptacles lightly with sealant.

f) Re-connect the harness plug to the ELT.

B. Installation Documentation

1) Update logbook (aircraft records) entries and submit FAA Form 337, along with any supporting data required by the FAA for approval of the installation, as applicable.

2) In countries other than the United States, make appropriate aircraft records entries and submit documentation as required for installation approval in accordance with national regulatory authorities.

Battery Pack Installation

A. Battery Installation and Reinstallation

CAUTION: THE BATTERY PACK CONTAINS ELECTROSTATIC DISCHARGE SENSITIVE (ESD) COMPONENTS AND, AS SUCH, MUST BE HANDLED WITH CARE. IF POSSIBLE, WEAR A GROUNDED WRIST STRAP WHEN HANDLING THE BATTERY PACK DURING INSTALLATION ACTIVITIES. TAKE PARTICULAR CARE TO AVOID TOUCHING THE EXPOSED CIRCUIT BOARD AND CONNECTOR PINS ON THE BOARD.

1) This subtask applies to reinstallation of an existing battery that was removed for inspection and testing, as well as fitting a new battery.
2) See Figure 26.

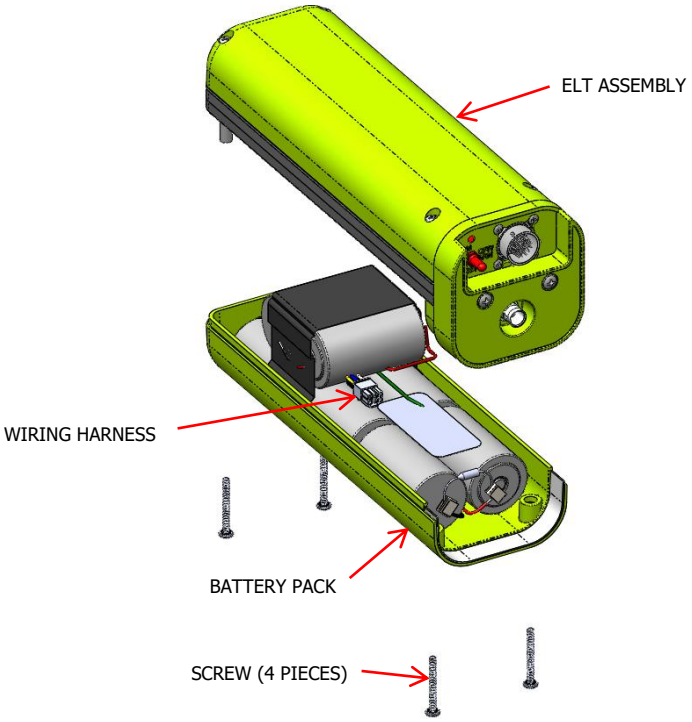

Figure 26 Battery Pack Installation

3) Apply a thin coating of non-petroleum based silicone grease, such as GE G-635, to the rubber seal to facilitate installation and allow the ELT and battery pack to slide together without binding on the rubber seal.

NOTE: Inspect gasket for wear and tear or damage prior to installation.

4) Lay the battery pack and ELT side by side, separated enough to allow the electrical connection to be made.

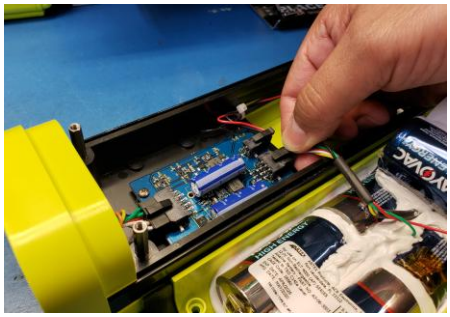

5) Take care not to put any strain on the wiring harness during the fitment process.
6) Connect the ELT lead 6-pin connector to the header on the battery pack circuit board.
7) Flip the beacon so the battery pack is on top (See picture below)

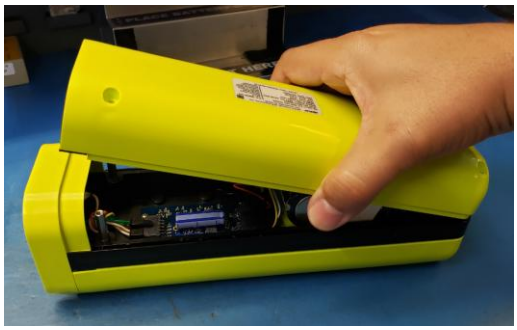

8) Align the rear section of the battery pack into the channel.
9) Slowly roll the battery pack into the rest of the channel and when almost complete, pinch the front of the battery pack and finish putting the pack into the channel (See picture below)

10) **NOTE: Make sure the battery pack is fully seated into the channel before tightening the screws**.
11) Tighten screws to 5-6 in-lbs. of torque in a Criss cross pattern.

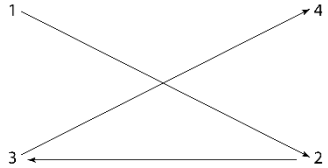

ILLUSTRATED PARTS LIST

Introduction

A. Purpose

1) This illustrated parts list (IPL) illustrates and lists the spare parts, with attaching hardware, applicable to the ELT 4000.
2) Parts and components not listed herein are not field replaceable and ELT repairs requiring parts outside the scope of this manual must be accomplished by the manufacturer.

B. IPL Usage Guide

1) If the part number is not known:
   a) Find the part in the IPL figure illustration.
   b) Note the item number assigned to the part.
   c) Refer to the associated parts list and find the item number in the "Fig # & Item" column.
2) If the part number is known:
   a) Refer to the parts list and find the part in the "Part #" column.
   b) Note the figure number and item number assigned to the part.
   c) Refer to the illustration in the applicable IPL figure to find attaching hardware and related assembly parts.
3) In cases where multiple item numbers are shown on an illustration for the same item, there is more than one part number option associated with that item.

Manufacturer Name and Address

A. Ordering Information

1) Parts may be ordered from ACR Electronics, Inc., or any authorized dealer.

CONTACT INFORMATION:

Sales, ACR Electronics, Inc. / ARTEX Products

5757 Ravenswood Rd

Fort Lauderdale, FL 33312-6645 USA

Phone: (954) 981-3333

Fax: (954) 983-5087

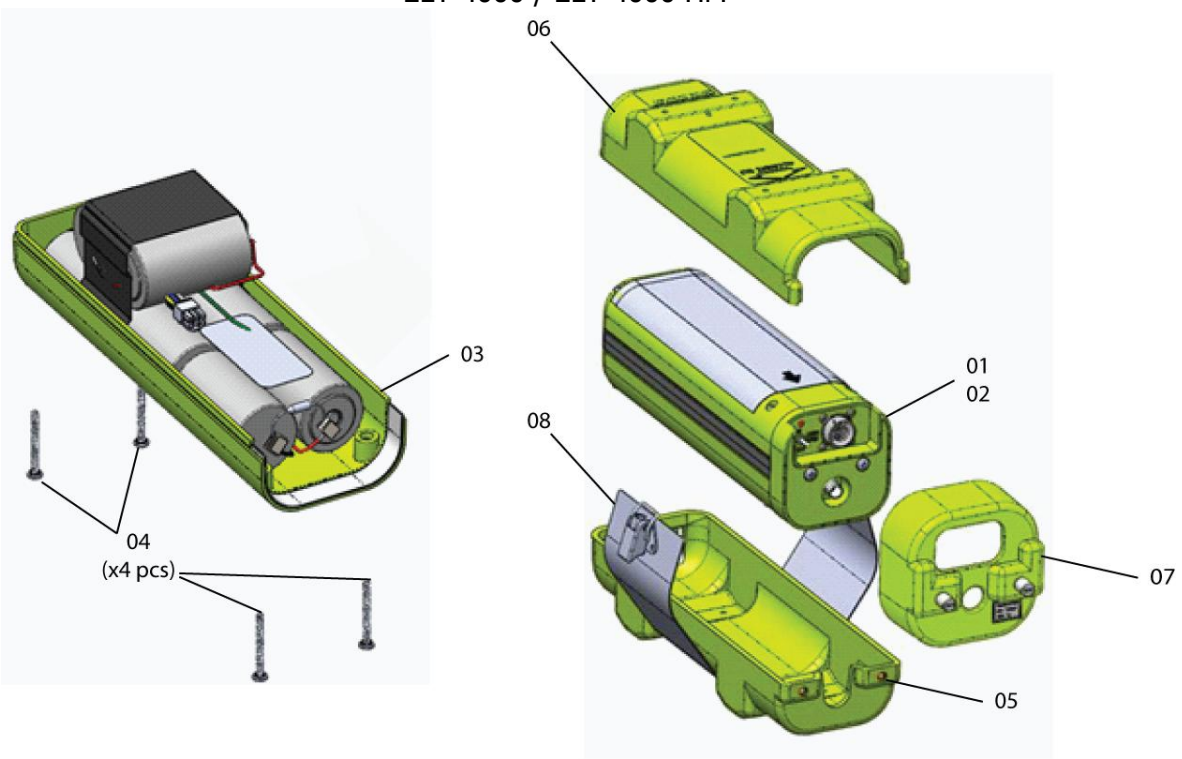

Figure 27 ELT 4000 Main Assembly and Installation (Configuration A Shown)

ITEM	PART #	DESCRIPTION	EFFECTIVITY	QTY
01	A3-06-3005	ARTEX ELT 4000 Final Assembly	ALL	1
02	A3-06-3005-1	ARTEX ELT 4000 HM Main Assembly	ALL	1 (Alt.)
03	A3-06-3003	Alkaline Battery Pack	ALL	1
04	217-0606	Screw, self-sealing #6-32 x 0.50”	ALL	4
05	452-5050-1	Mounting Tray Sub-Assy	A	1
-05	452-3052-3	Mounting Tray Sub-Assy	B	1
06	452-3052-1	Protective Top Cover	ALL	1
07	452-5066-1	Mounting Cap	A	1
08	A3-06-3043	Metal Strap	ALL	1

Table 8 Main Assembly Components

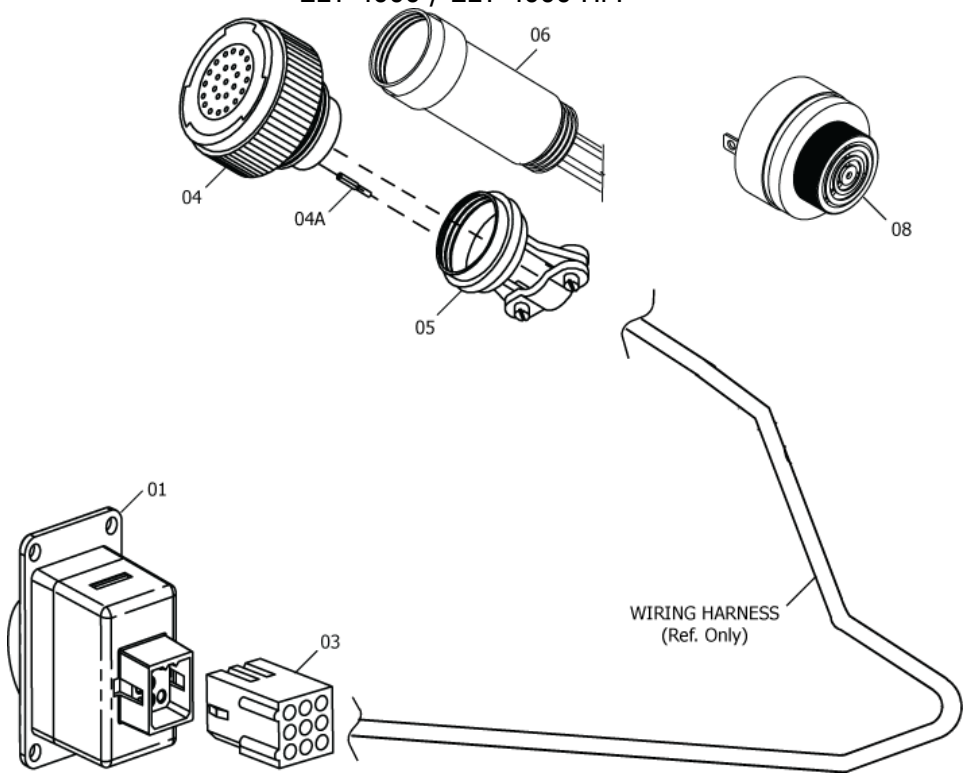

Figure 28 Harness Components

ITEM	PART #	DESCRIPTION	QTY
01	345-6196-04	Switch, cockpit remote	1
	A3-06-2759	Switch, cockpit remote	ALT
	A3-06-3214	Switch, slim, cockpit remote	ALT
	A3-06-3216	Switch, cockpit remote panel	ALT
-	201-0408	Screw, PHL, 4-40 x ¼”, SS	4
-	247-0400	Washer, internal lock, SS, #4	4
-	241-0440	Nut, 4-40 x ¼”, hex, SS	4
-	591-0428	Label, ELT Cautionary Use Advisory	1
03	151-5009	Plug, 9-pin	1
04	150-5061	Connector, 22-Postion, Plug, Shell Size 12	1
04a	151-6657	Contacts, 22D Crimp Socket (Included with 150-5061)	22
05	151-5061	Strain Relief, Shell Size 12	1
06	A3-06-2868	Programming Adapter (Programmed) (Optional)	1
08	452-6505	Buzzer (ELT aural alert)	1
-	130-4004	Buzzer (ELT aural alert)	ALT

Table 9 Harness Components

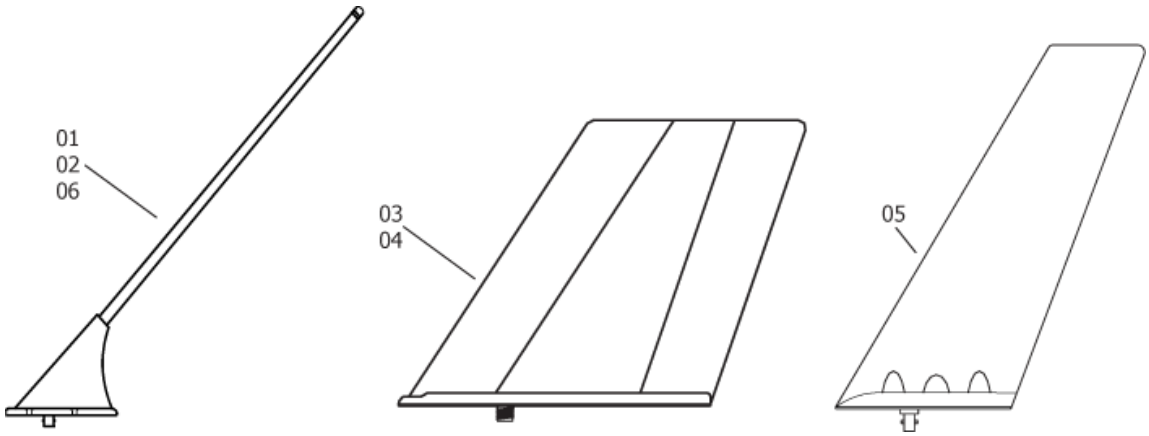

Figure 29 Antennas

ITEM	PART #	DESCRIPTION	QTY
01	110-338	Antenna, Rod, White (single input)	1
02	110-338-01	Antenna, Rod, Black (single input)	1
03	110-340	Antenna, 121.5/406 MHz, Blade, White	1
04	110-340-01	Antenna, 121.5/406 MHz, Blade, Gray w/protective edge	1
05	110-341	Antenna, 121.5/406 MHz, Blade, White	1
06	A2-06-2835	Antenna, 121.5/406 MHz, Rod, White	1
	611-6013-04	Cable, coax, BNC to BNC, 6’	1

Table 10 Antennas

APPENDIX A – ELT REGISTRATION

Background Information

A. Hex ID Code (15-Hex ID)

1) A Hexadecimal Identification (Hex ID) is a series of digits consisting of letters A-F and numbers 0-9 that identifies an individual beacon.
2) The Hex ID is a message that is programmed into the beacon and is transmitted when the beacon is activated and allowed to operate for about 50 seconds, or longer.
3) The 15 digit version of the Hex ID (15-Hex ID) is labeled on the outside of the each beacon.
4) Each 406 MHz ELT is programmed with a unique hex ID code (i.e. registration code) that is transmitted to the SAR satellite system. At a minimum, this code provides information regarding:
   a) Unique aircraft or ELT identification
   b) Country of origin
   c) Latitude and longitude position data, when connected to aircraft navigation system.
5) If the beacon is reprogrammed to a new protocol, aircraft tail number, different country, etc., the 15 Hex ID changes and the beacon requires relabeling.

B. Reason for Registration

1) ELT registration aids the Rescue Coordination Center (RCC) in determining if an actual emergency exists by accessing a database containing the registration information, which facilitates inquiries as to the whereabouts of the aircraft, existence of a flight plan, etc. Registration information includes, but is not limited to, the following:
   a) Owner's name
   b) Address
   c) Telephone number
   d) Aircraft type, and registration number

C. Registration Information Resources

1) Refer to Cospas-Sarsat documents G.005 and S.007 for in-depth information regarding ELT programming and registration. These documents are available at www.cospas-sarsat.int.

Registration

A. Responsibility

1) It is the responsibility of the aircraft owner to register the ELT.
   a) If an ELT is moved to a different aircraft (i.e. an aircraft other than the one it was originally installed on), and/or the aircraft is registered in a new country, the ELT must be re-programmed and re-registered.
   b) If the aircraft is registered in a new country, the ELT must be re-programmed and re-registered.
   c) The product label must be re-marked with the new HEX ID code to indicate new programming, if applicable.

B. Required Information

1) The following information is required when registering an ELT:
   a) The unique Hex ID code printed on the ELT product label.
   b) The information listed below:
      1. Owner's name
      2. Address
      3. Telephone number
      4. Aircraft type and registration number
      5. Any information specific to the registration database
2) The information (i.e., address, telephone number, etc.), filed as part of the registration process, should be kept up to date.

C. Where to Register

1) In the United States, the National Oceanic and Atmospheric Administration (NOAA) is the registration agency.
2) Specific registration web sites and information may be found at:
   a) The ARTEX products web site at https://www.acrartex.com, which has links to on-line registration sites and also a link to registration forms and instructions for a number of countries.
   b) An ELT may also be registered in the United States by going directly to the NOAA ELT registration web site at http://beaconregistration.noaa.gov
   c) By mail at

SARSAT Beacon Registration

NSOF, E/SPO53

1315 East West Hwy

Silver Spring, MD 20910-9684

or by phone at 1-888-212-7283 or 301-817-4565.

3) In other countries, the national civil aviation authority in the applicable country should be contacted to obtain registration information.

APPENDIX B – PROGRAMMING ADAPTER OPTION

Description and Operation

A. Purpose

1) The Programming Adapter (PA) is an ELT 4000 option that provides the means to reprogram the ELT automatically every time the PA determines a new ELT with different programming has been placed in an aircraft.
2) This capability facilitates swapping ELTs from one aircraft to another when performing routine maintenance, etc., without losing a significant amount of time reprogramming ELTs.
3) It is critically important that the Programming Adapter is programmed for use with ELT 4000. Do not use a Programming Adapter from a different model ELT (i.e. ELT C406).

B. Physical Description

1) The PA is housed in a back shell extension designed for use with the remote switch harness 22-position plug that mates with the ELT.
2) The PA circuitry is encapsulated in the back shell extension and has four wires, with pre-installed contact sockets, that exit the rear of the PA. See Figure 30.
3) A wire path through the back shell allows passage of the remote switch wires and other wires associated with ELT installation.

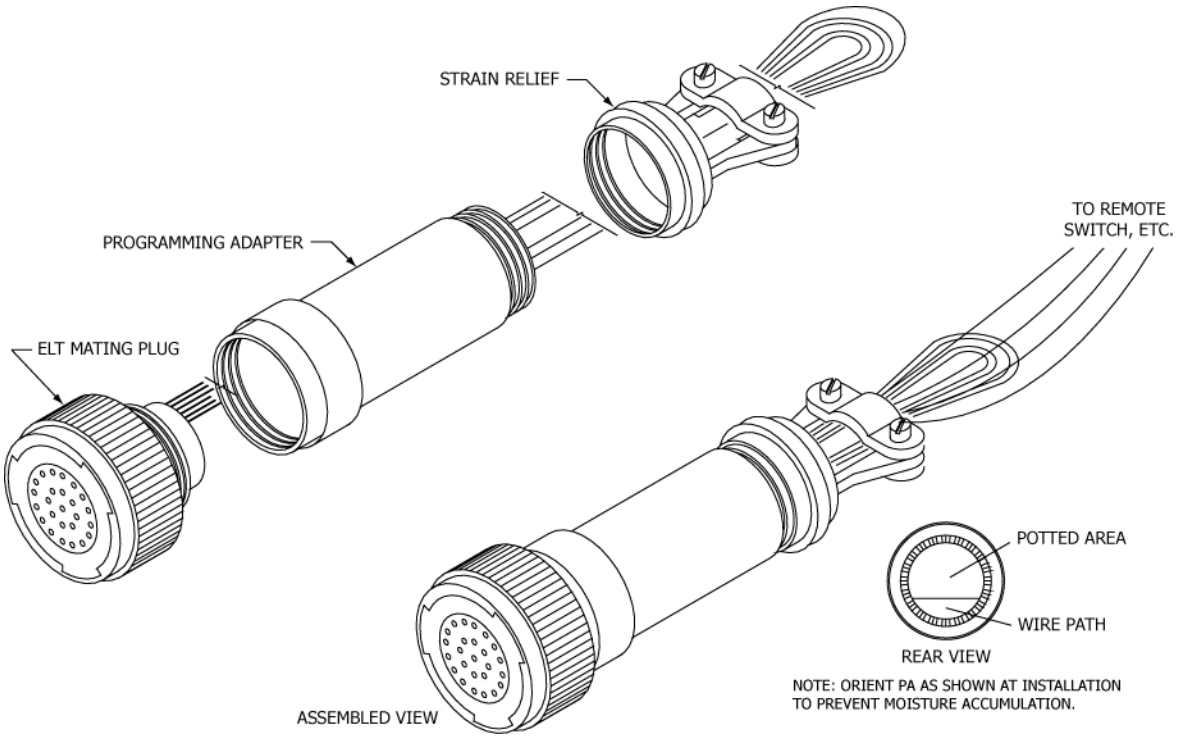

Figure 30 Programming Adapter

C. Functional Description

1) The programming adapter is a configurable option on the ELT via external tools.
2) When the programming adapter option is disabled on the ELT, the ELT bypasses PA detection on power up and initiated self-test. The ELT power up sequence is initiated by aircraft power or "Armed" mode.

3) If the programming adapter option is enabled on the ELT, the ELT transfers the PA unique identification number (UIN) and option settings from the PA to its internal memory on power up.
4) The ELT updates its internal memory UIN only if the data checksum on the PA is correct and there is a mismatch between the PA UIN checksum and the ELT UIN checksum.
5) The ELT bypasses PA detection if the previously activated state of the ELT was Transmit mode on power-up.
6) The ELT continuously displays an error code by flashing the unit and remote LED (LED on legacy 5-wire switch or 2-wire switch) with two pulses of ½ second duration with ½ second spacing if one of the following conditions occurs on power up:
   a) UIN and option settings transfer is unsuccessful.
   b) ELT failed to update its internal memory with the PA UIN and option settings.
   c) The ELT is not in activation state.
7) The ELT continuously displays an error code by flashing the unit and remote LED (LED on legacy 5-wire switch or 2-wire switch) with two pulses of ½ second duration with ½ second spacing if one of the following conditions occurs during a self-test:
   a) UIN and option settings transfer is unsuccessful after 2 consecutive queries.
   b) ELT failed to update its internal memory with the PA UIN and option settings.
   c) The ELT is not in activation state.

D. Operation

1) PA operation is automatic.
2) The ELT is reprogrammed with aircraft ID information using +28 VDC aircraft power when applied to the ELT.

Installation and Programming

A. General

NOTE: When the programming adapter is enabled, it has the ability to store any protocol, except the Serial Number protocol.

1) If the ELT is configured for a PA, the PA is contained in the backshell of the connector as part of the wiring bundle. The PA contains a bi-directional I2C memory chip and stores the aircraft identification. The PA memory is readable and writable from the ELT, and a protocol to receive and send memory contents is available through the serial port.
2) The ELT options are also stored on the PA.

B. Wiring

1) Coordinate installation of the PA with installation of the remote switch harness ELT plug. Refer to ELT 22-Pin Plug Installation.
2) If the PA is undergoing installation on an aircraft with an existing ELT and remote switch harness, perform the following procedure, otherwise proceed to Step (3):
   a) Loosen the strain relief clamp and unscrew the strain relief from the plug body.
   b) Remove the wiring from the ELT mating plug by extracting the contact sockets using extraction tool MS27495R22MS, or equivalent.
   c) Remove the jumper from Pin 3 and Pin 4.
   d) Remove the sealing grommet plugs and empty contact sockets from Pin locations 1, 2, 4, and 11.
3) Loop the PA wires back through the wire path such that they exit at the front of the PA. See Figure 31.
4) Terminate the contact sockets of the four PA wires in the remote switch harness ELT plug using insertion tool MS27495A22MS, or equivalent. Connect to the mating plug. See Figure 31.

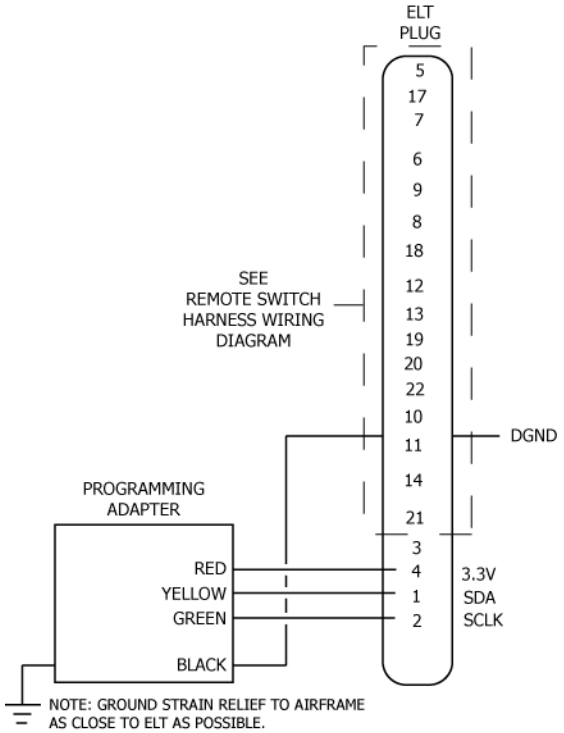

Figure 31 Programming Adapter Interface Wiring Diagram

5) Feed the remote switch harness wires and other wires associated with the ELT installation through the strain relief.

NOTE: Slide heat shrink tubing of suitable size over the wires, if desired. The diameter of the tubing must be large enough to accommodate the PA wire loop that extends back beyond the strain relief clamp.

6) Feed the remote switch harness wires and other wires associated with the ELT installation through the PA wire path.

7) Terminate the remote switch harness wires and other wires associated with the ELT installation in the ELT plug in accordance with ELT 22-Pin Plug Installation.

C. Assembly

CAUTION: ORIENT THE PA BODY TO THE PLUG SUCH THAT THE WIRE PATH IS AT THE BOTTOM. THIS ORIENTATION PREVENTS MOISTURE BUILDUP IN THE PA AND AROUND THE BACK OF THE PLUG.

1) Screw the PA body (i.e. back shell extension) onto the ELT plug, taking care not to twist the wires while rotating the back shell extension coupling. See Figure 30 for PA body orientation.

NOTE: Apply finger pressure in the center of the ELT plug face to prevent it from rotating and twisting the wires while tightening the coupling.

2) Shrink the heat shrink tubing, if installed.
3) Screw the strain relief onto the back shell extension.
4) Tighten the strain relief clamp.
5) Verify the strain relief is grounded to the airframe in accordance with Airframe Ground Connections.

D. Installation

1) See Figure 32.
2) Install the PA assembly on the ELT in the same manner that the remote switch harness ELT plug is normally coupled to the ELT receptacle.
3) After system operation is verified, with no errors displayed, it is suggested that the harness connector to the ELT be sealed against moisture. This is best accomplished by encapsulating the exposed connections in silicone sealant. ACR recommends Dow Corning® 4 Electrical Insulating Compound or an equivalent meeting SAE AS-8660 (MIL-S8660C)
   a) Disconnect the PA circular plug from the ELT.
   b) Separate the circular connector strain relief from the connector.
   c) Inject sealant into the back side of the plug so that sealant surrounds all exposed electrical connections and the back of the plug.
   d) Re-seat the circular connector strain relief to the connector.
   e) Coat the mating pins/receptacles lightly with sealant.
   f) Re-connect the PA Circular plug to the ELT.

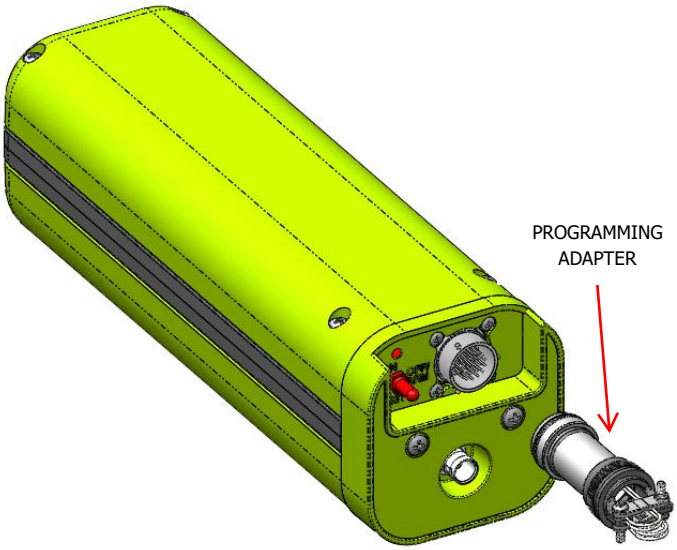

Figure 32 Programming Adapter Installation

E. PA Programming

CAUTION: THE PROGRAMMING AND LABELING OF THE ELT MUST MATCH THE AIRCRAFT IN WHICH IT IS INSTALLED. REMARK THE ELT PRODUCT LABEL AS NECESSARY TO REFLECT NEW PROGRAMMING AND/OR COUNTRY OF REGISTRY. CONTACT THE LOCAL REGULATORY AUTHORITIES RESPONSIBLE FOR ELT REGISTRATION. SEE APPENDIX A – ELT REGISTRATION.

1) The PA may be programmed with any aircraft ID [i.e. 24-bit address or registration number (tail number)].
2) The A3-06-2868 PA is available from ACR Electronics, Inc. pre-programmed with an aircraft ID.
3) An alternative version of the PA (A3-06-2869) is available with a default protocol pre-programmed into the unit.

4) Either version of the PA can be programmed in the field. Contact ACR Electronics, Inc. for the hardware and software required to program the PA.
5) ARINC 429: When Aircraft power is present, the ARTEX ELT 4000 receives and decodes ARINC 429 GPS position data using ARINC labels octal 310 and octal 311. This data will include the navigation data coming from the aircraft's Flight Management System (FMS). A 22-pin Mil-standard circular connector is used for programming and ARINC interface functions. The ARINC 429 Rx stops when aircraft power is lost, whether the unit is activated or not activated. The ARINC 429 Rx is started when aircraft power is reapplied, whether the unit is activated or not activated. The ARTEX ELT 4000 recognizes bad ARINC messages and location information from those messages are not transmitted to the Cospas-Sarsat satellites. The selected ARINC integrated circuit will perform error correction.

F. Example Programming Scenarios

1) This section highlights use cases for the Programming Adapter.
2) Case 1: Programming Adapter not enabled.
   a) The ELT functions as if there is no Programming Adapter attached. The Self-Test displays an error by flashing the unit and remote LED (LED on legacy 5-wire switch or 2-wire switch) with two pulses of ½ second duration with ½ second spacing if a Programming Adapter is detected and the ELT is not in activation state.
   b) If the Programming Adapter is disabled or the Programming Adapter is not present, there is no error.
3) Case 2: Programming Adapter enabled but Programming Adapter not present.
   a) The Self-Test displays an error by flashing the unit and remote LED (LED on legacy 5-wire switch or 2-wire switch) with two pulses of ½ second duration with ½ second if the Programming Adapter is not detected and the unit is not in activation state. This error continues to flash until the Programming Adapter issue is resolved.
4) Case 3: Programming Adapter enabled, Programming Adapter present
   a) Case 3a: ELT UIN and PA UIN mismatch: The ELT transfers the Programming Adapter UIN and option settings on the first power-up. If reprogramming is successful, the remaining functions behave normally. If the reprogramming was not successful, a self-test error is displayed continuously by flashing the unit and remote LED (LED on legacy 5-wire switch or 2-wire switch) with two pulses of ½ second duration with ½ second spacing. The ELT should be reset to the "Data Transfer Identification" UIN to attempt the data transfer.
   b) Case 3b: ELT and UIN match: No further action required.

G. Aircraft ID Verification Test

1) Apply +28 VDC power to the ELT. The ELT is not activated, only the +28 VDC power source for the ELT is active, which initiates ELT reprogramming. Refer to Table 6 if a long/short 2-flash error code is displayed on the ELT status LED when power is applied.
2) Disconnect the antenna coax cable at the ELT.