INSTALLATION MANUAL

EyeBeam Mini

DOC.NO: AVE-EBM-IM

© Aveo Engineering Group, s.r.o. All rights reserved. The information contained within this document must not be disclosed, copied or reproduced in whole or in part without prior written permission from Aveo Engineering Group, s.r.o.

Table of Contents

PART 0 MANUAL ADMINISTRATION 3

0.1 DOCUMENT APPROVAL 3
0.2 AMENDMENT RECORD PROCEDURE 4
0.3 AFFECTED PAGES PROCEDURE 4

PART 1 INSTALLATION DATA 5

1.1 EYEBEAM MINI 5
1.2 OPERATING INSTRUCTIONS 5
1.3 INSTALLATION SCHEMATIC / WIRING DIAGRAM 6
1.4 CONTROL & POWER INPUTS 6
1.5 TECHNICAL SPECIFICATION 6
1.6 TECHNICAL DRAWING 8
1.7 WIRING CHART 9
1.8 OPTIC SIMULATION 10
1.9 EQUIPMENT LIMITATION 11
1.10 CARE AND CLEANING OF YOUR AVEO ENGINEERING AVIATION LIGHTS 11
1.11 TESTING OF THE LIGHT BEFORE INSTALLATION 11
1.12 NOTES ON INSTALLATION 12
1.13 CONTINUES AIRWORTHINESS INFORMATION 12
1.14 ROHS COMPLIANCE STATEMENT 13
1.15 EU REACH REGULATION (EC) NO. 1907/2006 13

Part 0 Manual Administration

0.1 Document Approval

This document has been established in accordance with an alternative procedure to DOA approved under EASA AP429.
This installation manual is applicable for part numbers:

- ~~EyeBeam Mini - Silver / Black Faceplate~~ **~~AVE-EMB4S-00T~~**
- ~~EyeBeam Mini - Black / Silver Faceplate~~ **~~AVE-EMB4B-00T~~**
- EyeBeam Mini - Silver / Silver Faceplate **AVE-EMB3S-00T**
- EyeBeam Mini - Black / Black Faceplate **AVE-EMB3B-00T**
- EyeBeam Mini - Silver Custom **AVE-EMB3S-10T**

Compiled by:_____ 17. – Aug. - 2026
Aleš Vondráček
Engineer, Aveo Engineering Group, s.r.o.

Approved by:_____ 17. – Aug. - 2026
Georg Hartl
Head of DO, Aveo Engineering Group, s.r.o.

0.2 Amendment Record Procedure

The master copy of this document shall be kept electronically as a read only document under the control of Aveo Engineering Group, s.r.o. as Master Copy.
ALL amendments to this manual will initiate a raise of issue.
ALL raises of issue will be given a sequential numeric issue ident sequentially from 01 to 99 in Table 01 - ***Issue No:*** Column– Initial Issue of Document will be **"01"**
ALL Issues of this document will be approved by Head of DO

Issue No.	Details	Date	Affected Pages
01	Initial Issue	14.Apr.2021	ALL
02	Added new partnumber Added DO-160 G	17.Aug.2026	3,5,6,8 7
Table 01: Document Amendment Record Table			

0.3 Affected Pages Procedure

ALL pages affected by ANY raise of issue of this document will be listed in Table 01 - *Affected Pages* Column.
The reason(s) for ALL raise of issue and description of change due to raise of issue will be provided for ALL raises of issue in Table 01 - *Details* Column.
Changes from the previous issue are highlighted by YELLOW HIGHLIGHTING over new content. AND YELLOW HIGHLIGHTING AND CROSSING OUT of deleted content.
Example (~~CROSSING OUT~~)

Part 1 Installation Data

1.1 EyeBeam Mini

EyeBeam Mini™ is interior swivel LED light with TOUCH sensing control. It is available in black or natural anodized finish.

- EyeBeam Mini - Silver / Silver Faceplate **AVE-EMB3S-00T**
- EyeBeam Mini - Black / Black Faceplate **AVE-EMB3B-00T**
- EyeBeam Mini - Silver Custom **AVE-EMB3S-10T**

1.2 Operating Instructions

Operating Voltage range is 9-36VDC. When installed on the aircraft, using the aircraft's power (14 or 28 volts), the light will be at its maximum intensity.

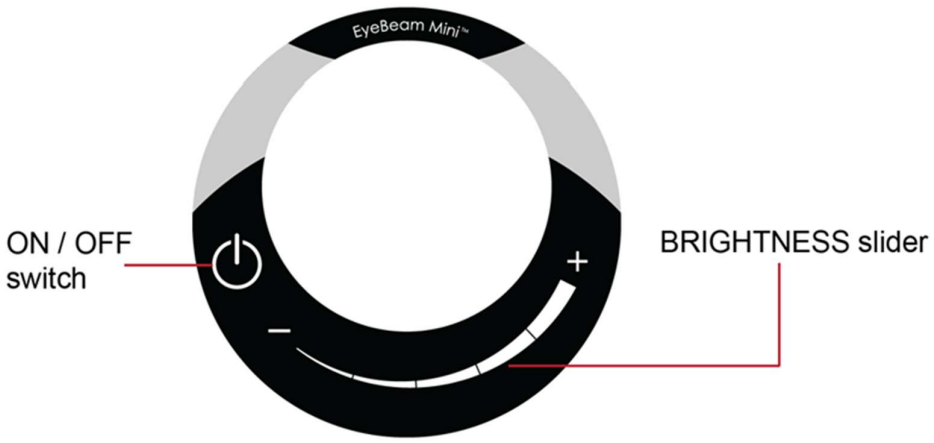

1.3 Installation Schematic / Wiring Diagram

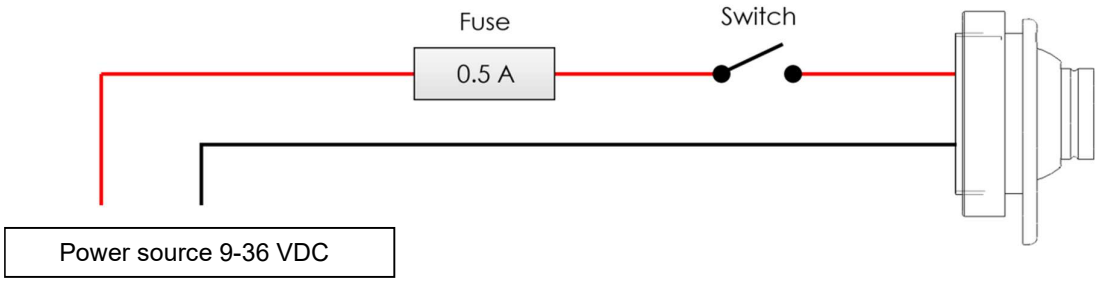

1.4 Control & Power Inputs

BLACK – Negative power supply line (ground)
RED – Positive power supply line

Wire length: 254 mm / 10”
Wire size: AWG 22
Teflon insulation

1.5 Technical Specification

Electronic specification - Ambient temperature (25°C):

Operating voltage range:	9-36V DC
Dimensions:	See section #1.6 – Technical Drawing
Performance:	
Input current (Min):	0.01A @14V
	0.01A @28V
Input current (Max):	0.15A @14V
	0.10A @28V
Input power (Min):	0.1W @14V (typ)
	0.3W @28V (typ)
Input power (Max):	2.1W @14V (typ)
	2.8W @28V (typ)
Operating temperature:	-40°C to +85°C / -40°F to +185°F
Weight:	3.35 oz / 95 g
Weight (AVE-EMB3S-10T):	3.53 oz / 100 g

DO160G Test qualified:

Environment	Section	Category
Temperature / Altitude	4	B2
Temperature Variation	5	A
Humidity	6	A
Operational Shock and Crash Safety	7	B*
Vibration	8	U curve G
Explosive Atmosphere	9	H
Waterproofness	10	-
Fluids Susceptibility	11	-
Sand and dust	12	D
Fungus	13	F
Salt Spray	14	T
Magnetics Effects	15	Z
Power Input	16	Z
Voltage Spike	17	A
Audio Frequency Susceptibility	18	B
Induced Signal Susceptibility	19	BW
Radio Frequency Susceptibility	20	S
Radio Frequency Emissions	21	M
Lightning Induced Transient Susceptibility	22	A2E2X
Electrostatic Discharge	25	A
Fire, Flammability	26	C**

** 20G Random*
***Compliance is demonstrated per design*

1.6 Technical Drawing

- **AVE-EMB3S-00T**
- **AVE-EMB3B-00T**

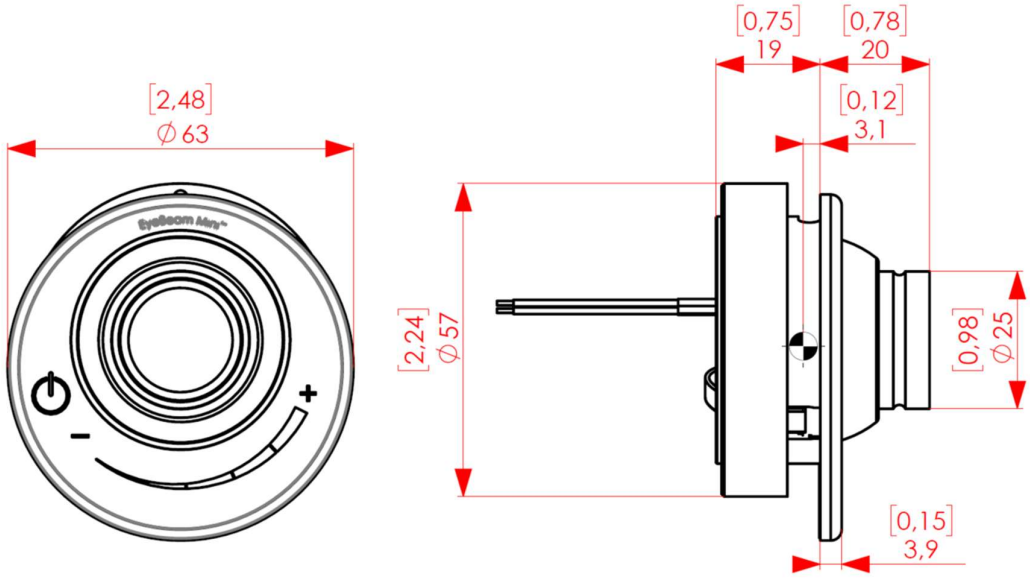

**dimensions in mm [inches]*

- **AVE-EMB3S-10T**

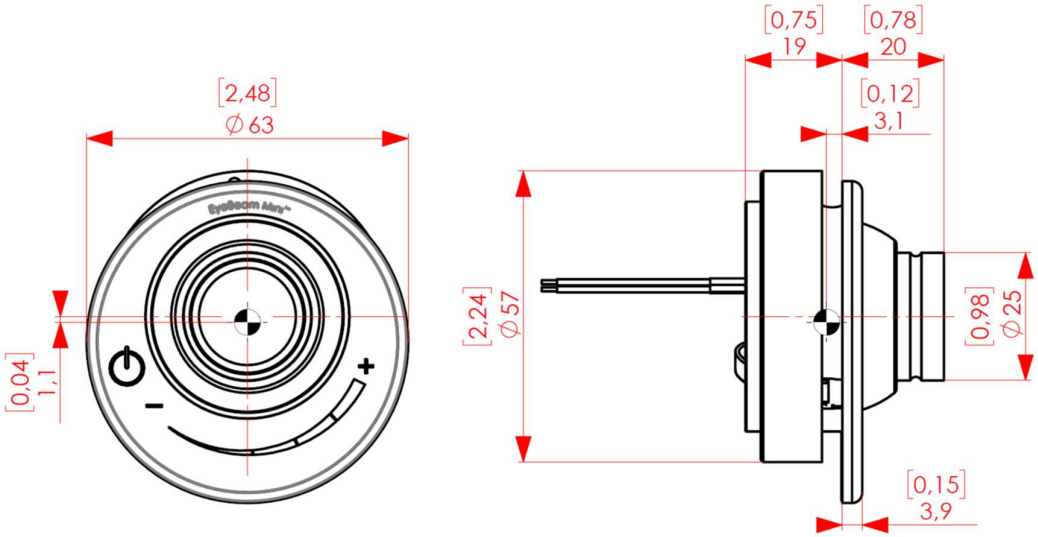

MOUNTING HOLE

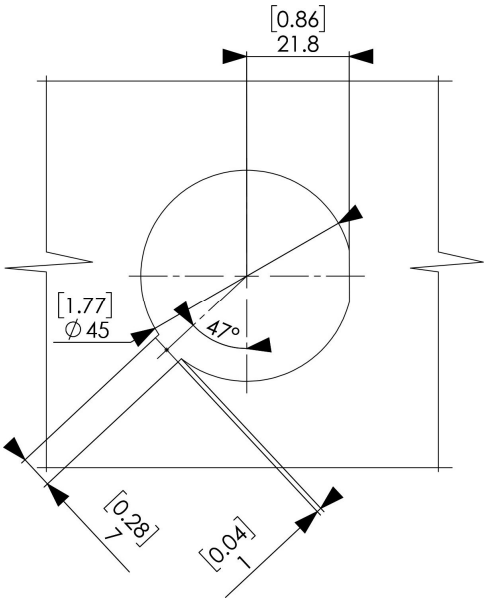

**dimensions in mm [inches]*

1.7 Wiring Chart

Use diagram below defining the wiring size depending on the current and the wire length. Make sure you add up the current for all connected lights. If current is not given, then divide the power by the voltage.

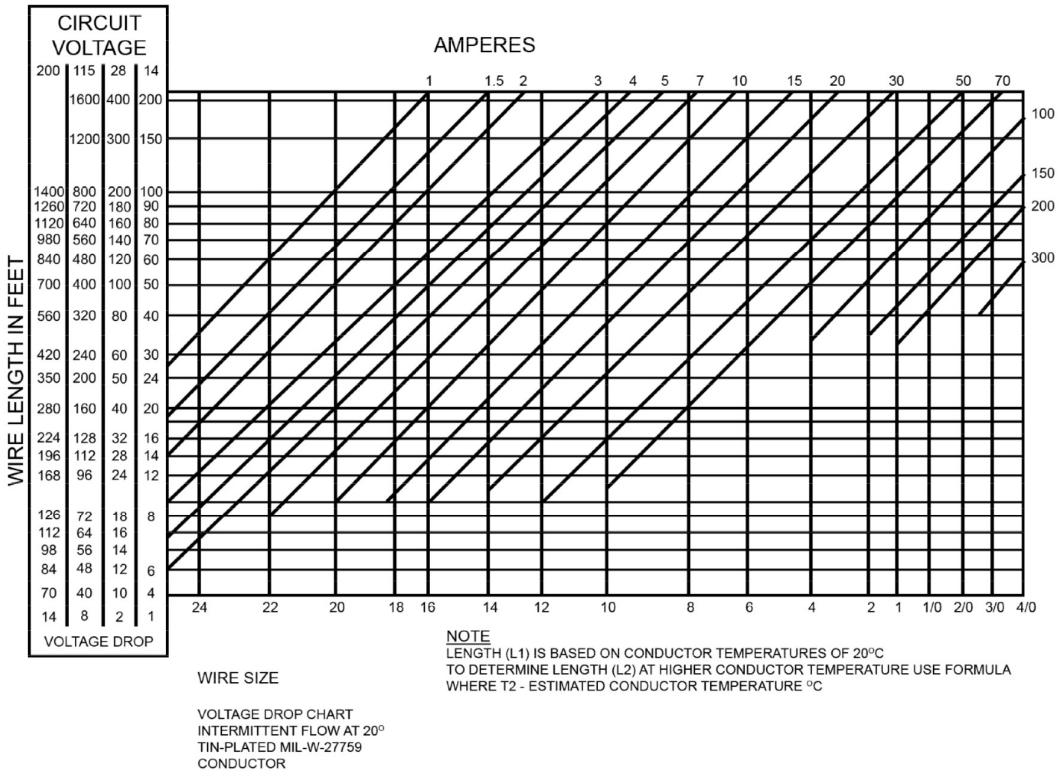

1.8 Optic Simulation

Standard lens
White LED
Intensity (max): approx. 317 cd

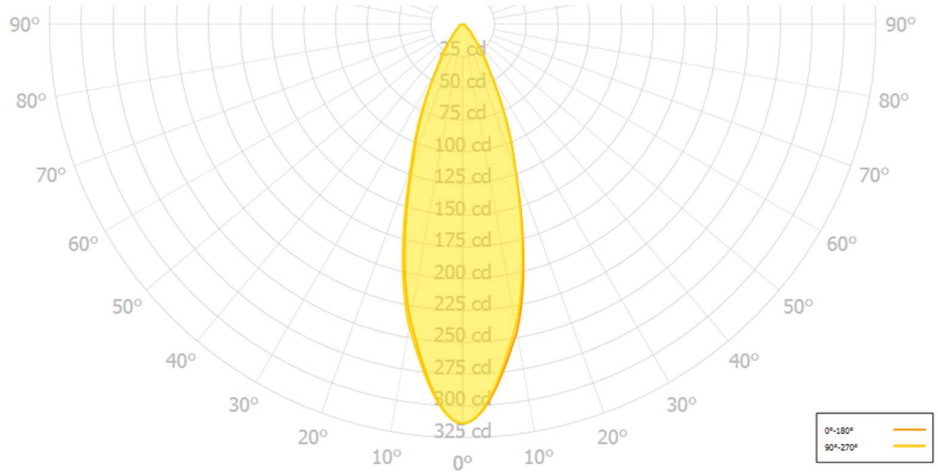

Candela Polar Plot

Intensity (min): approx. 32 cd

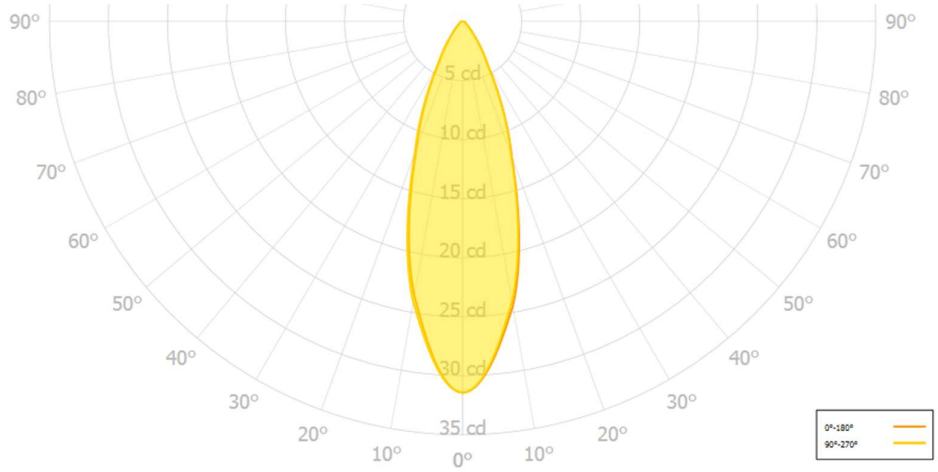

Candela Polar Plot

1.9 Equipment Limitation

EyeBeam Mini™ should only be powered by 9-36VDC.

1.10 Care and Cleaning of your Aveo Engineering Aviation Lights

When you receive your Aveo Engineering Aviation Lights, they will have been factory polished and ready to install on the aircraft.

If the lights require a deeper cleaning, they should be polished with a quality lamb's wool sheet and can also be used for deeper polishing. Under no circumstances should any petroleum based product be used to clean the lights.

1.11 Testing of the Light Before Installation

All Aveo Aviation lights undergo rigorous testing prior to being released from our engineering manufacturing department. This testing involves a burn-in time as well as other function testing. No light is released for sale without undergoing this extensive operational testing.

When you receive the ***EyeBeam Mini™*** light, and wish to test the function of the light prior to installation on your aircraft, please note the following:

1. Please review the written information that is enclosed in the packaging. Warranty information as well as a cautionary note about power supply removal is enclosed with each package.

2. Remove the light from the package. Note that there are two (2) wires:
   Black (-) Negative lead
   Red (+) Positive lead

3. Testing of the function of the light can be done with a regular 14V or 28V/5A dc power supply (not a battery charger). Connect the black wire to the ground (negative) leads of a power supply, and then connect the red wire to the positive (+) leads on the power supply. The EyeBeam Mini light should start lighting. When installed on the aircraft, using the aircraft's power (14 or 28 volts), the light will be at its maximum intensity.

After testing, the light can be installed on the aircraft.

IMPORTANT NOTES:

1. Under no circumstances should any power supply other than a 9-36 VDC, or a 14 or 28 volt battery be used to test the light. Do not use: Battery chargers, battery back-up power devices, or other bench avionics testing methods to test the aviation light. The light is functional between 9 and 36 volts. Use of a battery charger or other power unit to test the light will void the warranty and may damage the light.

If you have any questions about the installation of the lights, please refer to our web site: www.lightaveo.com

1.12 Notes on Installation

Insert the EyeBeam Mini light unit into the panel cutout (ceiling or wall) from the front. Secure it from the back of the panel by threading on the Tightening Nut. Finally, lock the assembly in place by tightening the M3x6 DIN 553 Locking Screw.

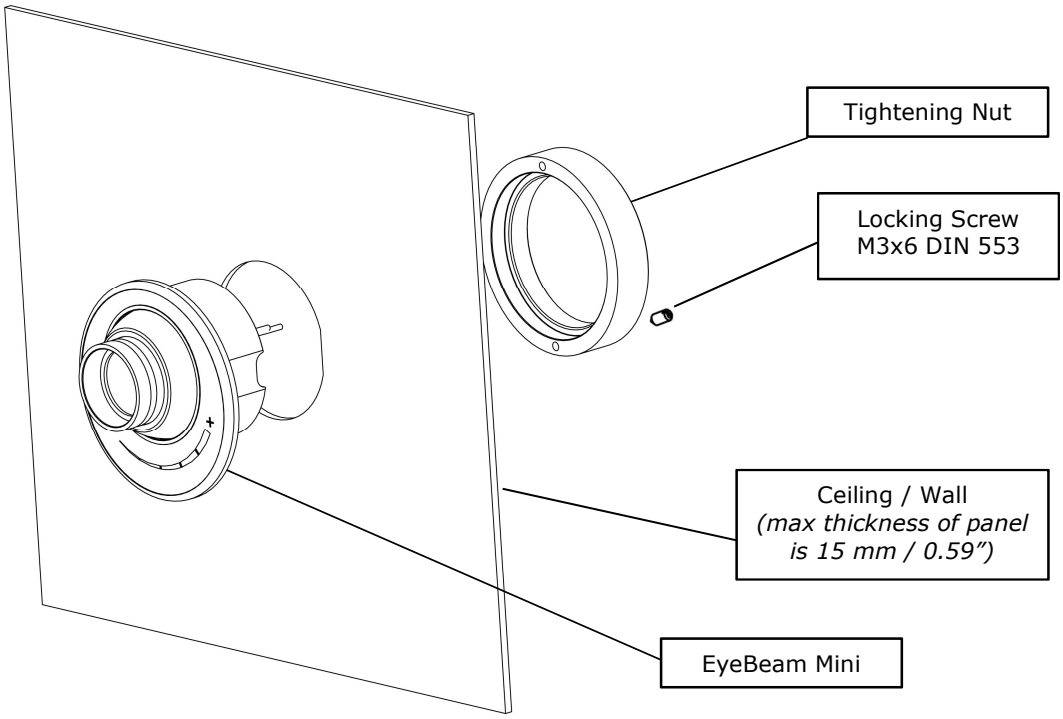

1.13 Continues Airworthiness Information

Periodic Inspection Procedure for EyeBeam Mini series.

The ***EyeBeam Mini***™ lights should always be checked for proper operation during preflight. This procedural information is already provided in all general aviation aircraft flight manuals.

The lights should be visually inspected for general condition, proper operation, and correct installation at each annual and/or 100 hours inspection. In addition refer to section 1.10 of installation manual for detailed cleaning instructions.

1.14 RoHS Compliance Statement

Scope

This statement clarifies Aveo Engineering's compliance with European Union Directive 2015/863/EU on the restriction of the use of certain hazardous substances in electrical and electronic equipment ("RoHS") that took effect on June 4, 2015. The RoHS Directive restricts the sale of electronic equipment containing certain hazardous substances in the European Union including:
Cadmium(Cd): 0.01%
Mercury: 0.1%
Lead(Pb) : 0.1%
Hexavalent chromium (Cr6+) : 0.1%
Polybrominated biphenyls (PBB): 0.1 %;
Polybrominated diphenyl ethers (PBDE): 0.1 %
Bis(2-Ethylhexyl) phthalate (DEHP): 0.1% (added in 2015);
Benzyl butyl phthalate (BBP): 0.1% (added in 2015);
Dibutyl phthalate (DBP): 0.1% (added in 2015);
Diisobutyl phthalate (DIBP): 0.1% (added in 2015)

Compliance

Aveo Engineering certifies that all products sourced from manufacturing facilities comply with the environmental standards set forth by the Directive 2015/863/EU, recast amendment of RoHS Directive 2011/65/EU Article (4), and do not contain any of the above-mentioned, 10 hazardous substances above the specified limits. All products manufactured by Aveo Engineering are RoHS-compliant. With regards to RoHS-2 CE marking, product packaging is labeled attesting conformity if required.

References

Directive 2015/863/EU of the European Parliament and of the Council on the restriction of the use of certain hazardous substances in electrical and electronic equipment.

1.15 EU REACH Regulation (EC) No. 1907/2006

Aveo Engineering declares that no chemicals are produced and that none of the chemicals used during the production process or needed for the product maintenance or service, is listed on the current European Chemicals Agency's Candidate list of Substances of Very High Concern for Authorization.