D30

Touchscreen Electronic Flight Display

Installation and Maintenance Manual

Includes Instructions for Continued Airworthiness (ICA)

103997-000

Copyright © 2024 by Dynon Avionics, Inc.

Dynon Avionics grants third parties' permission to print this document

Contact Information

Dynon Avionics, Inc.
19825 141st Place NE
Woodinville, WA 98072

Technical Support
Phone: +1 (425) 224-6736, 8:00 AM – 5:00 PM (Pacific Time) Monday – Friday
Email: support@dynon.com

Sales
Phone: +1 (425) 650-1269, 8:00 AM – 5:00 PM (Pacific Time) Monday – Friday
Email: sales@dynon.com

Find Us on the Web

dynon.com – Dynon homepage
dynon.com/docs – Product documentation
dynon.com/download – Software updates for products
dynon.com/support – Support resources
dynon.com/register – Register your Dynon Avionics product
shop.dynon.com – Dynon's *secure* online store

Stay in Touch

dynon.com/newsletter – Sign up to receive Dynon's newsletter
forum.flydynon.com – Dynon-hosted forum for customers and pilots
preflight.dynon.com – Dynon's blog
facebook.com/dynonavionics
instagram.com/dynonavionics
twitter.com/dynon

Videos and Training

youtube.com/DynonAvionics – Training, events, and other videos on YouTube

Copyright

©2024 Dynon Avionics, Inc. All rights reserved. No part of this manual may be reproduced, copied, transmitted, disseminated, or stored in any storage medium, for any purpose without the express written permission of Dynon Avionics. Dynon Avionics hereby grants permission to download a single copy of this manual and of any revision to this manual onto a hard drive or other electronic storage medium to be viewed for personal use, provided that such electronic or printed copy of this manual or revision must contain the complete text of this copyright notice and provided further that any unauthorized commercial distribution of this manual or any revision hereto is strictly prohibited.

Information in this document is subject to change without notice. Dynon Avionics reserves the right to change or improve its products and to make changes in the content without obligation to notify any person or organization of such changes. Visit the Dynon Avionics website (dynon.com) for current updates and supplemental information concerning the use and operation of this and other Dynon Avionics products.

Revision History

REV	APPROVAL	DESCRIPTION OF CHANGE
B	09/30/2024 ECO 392602	• Fixed typo in Section 2.1: Specifications. • Revised Figure: 5: Mounting Dimensions for clarity. • Revised Section 3.4: Electrical Installation to clarify wiring harness is sold separately. • Revised Section 5.2: Cleaning to remove discontinued product. • Revised unit installation procedure and Figure 5 in Section 5.2 to include an optional hole for unit retaining screw.
A	07/20/2023 ECO 387170	Initial Release

Table of Contents

1 General 1-1

1.1 Document Control 1-1

1.2 Using this Manual 1-1

1.3 Intended Audience 1-1

1.4 Manual Iconography 1-1

1.5 Reference Documents 1-2

1.6 Mechanical Drawings 1-2

1.7 Product Delivery & Warranty 1-2

1.8 Product Registration 1-2

2 System Overview 2-1

2.1 Specifications 2-1

2.2 Basic Controls 2-2

2.3 System Operation 2-3

3 Installation 3-1

3.1 Backup Battery Installation 3-1

3.2 Unit Installation 3-2

3.3 Pitot and Static Connection 3-7

3.4 Electrical Installation 3-9

3.5 System Check 3-11

3.6 Configuration 3-12

4 Troubleshooting 4-1

4.1 Self-Diagnostics 4-1

4.2 Unit Does Not Start-up 4-2

4.3 Airspeed Incorrect 4-2

4.4 Airspeed Indicator Frozen or Indicates Zero 4-2

4.5 Altitude Indicator Frozen 4-3

5 Maintenance 5-1

5.1 Periodic Maintenance 5-1

5.2 Cleaning 5-2

5.3 Backup Battery Test 5-2

5.4 Backup Battery Replacement 5-3
5.5 Unit Removal and Replacement 5-5
5.6 Pitot and Static Leakage Tests 5-7
5.7 Zero-pressure Calibration 5-8
5.8 Pitch/Roll Angle Check & Adjustment 5-8
5.9 Altimeter Function Testing & Altitude Offset 5-9
5.10 System Software Updates 5-10

This page intentionally left blank.

1 General

This document provides installation and configuration information for the Dynon D30 Touchscreen Electronic Flight Display. It also provides Instructions for Continued Airworthiness (ICA) for use by technicians and homebuilders to service and maintain the D30 according to Federal Aviation Regulation (FAR) 14 CFR § 23.1529 and 14 CFR 23 Appendix G.

1.1 Document Control

This document is released, archived, and controlled according to the Dynon's document control system. Dynon posts documents for customer use at dynon.com/docs. Only the latest revision of a document is made available. Owners and installers are notified of the new revision via an official Dynon Marketing email release.

1.2 Using this Manual

To save paper, Dynon does not provide a printed version of this manual. However, Dynon grants permission to third parties to print this manual, as necessary. The most recent PDF version is available for download at dynon.com/docs. This manual is updated periodically. It is important to use the most recent revision when servicing the D30 Touchscreen Electronic Flight Display.

Dynon suggests keeping a PDF version of the manual on a smartphone, tablet, or laptop computer while installing and servicing SkyView components. Using the manual electronically allows quick navigation of the document, figures to be viewed in color, and keyword searches.

1.3 Intended Audience

This document is intended for technicians and homebuilders who are installing or servicing a D30 Touchscreen Electronic Flight Display.

1.4 Manual Iconography

This manual uses the following iconography:

Alerts reader to important information that mitigates potential unsafe conditions and/or equipment damage.

Alerts reader to noteworthy technical information.

Alerts reader to helpful tips or suggestions.

1.5 Reference Documents

- 104002-000 – D30 Airplane Flight Manual Supplement (*current revision*)
- 23.1311-1C – Installation of Electronic Display in Part 23 Airplanes
- AC 43.13-1B – Acceptable Methods, Techniques and Practices – Aircraft Inspection and Repair
- AC 43.13-2B – Acceptable Methods, Techniques and Practices – Aircraft Alterations

1.6 Mechanical Drawings

All mechanical drawings included in this manual are for *reference purposes only*. They should not be scaled or copied and used as templates or patterns.

1.7 Product Delivery & Warranty

Upon delivery, visually inspect the D30 and accessories (bracket, fasteners, cable harness) for damage that may have occurred during shipping. If damage has occurred, contact Dynon Technical Support.

1.8 Product Registration

Register the D30 at dynon.com/register. Product registration confirms ownership, expedites warranty claims, and allows Dynon to send notification when product Service Bulletins and Technical Advisories are published. This site also allows owners and installers to register to receive news and product announcements from Dynon. Dynon will not share contact information with third-parties or send announcements without explicit consent.

2 System Overview

The D30 Touchscreen Electronic Flight Display features internal calibrated solid-state sensors and a high-definition display to present Airspeed, Altitude, and Attitude data.

The D30 provides pilots with immediate Primary Flight Information (PFI) in case of failure of the primary display or instruments providing PFI. It also allows pilots to cross-compare the presented PFI to ensure data integrity.

2.1 Specifications

MECHANICAL SPECIFICATIONS	
Width	3.35" (85.1 mm)
Height	3.85" (97.8 mm)
Depth	4.27" (108.5 mm)
Weight	1.1 lbs. w/ Battery
Finish	Black Anodized Aluminum
Operating Temperature	-20 to 70 °C
Storage Temperature	-55 to 80 °C
ELECTRICAL SPECIFICATIONS	
Power Requirement	10–30V
Power Consumption	0.6A at 12V 0.3A at 24V
Power Consumption when Battery is Charging	1.1A at 12V 0.6A at 24V
Connector Type	D25 Male
USB Port Type	Type-C USB 2.0
USB Port Power Output (1)	0.5V
DISPLAY SPECIFICATIONS	
Display Type	LCD
Resolution	720 x 720 px
Vertical Viewing Angle	80°
Horizontal Viewing Angle	80°
Screen Treatments	Anti-Reflective Anti-Fingerprint

(1) Charging external devices using the USB port is prohibited.

2.2 Basic Controls

Operating the D30 is intuitive for people familiar with flight instrumentation. Basic operation happens via touching the actual indicators on the screen or the menu icon in the upper left corner of screen. The front bezel has an ON/OFF button (i.e., Bezel Button) and a USB-C port.

Figure 1: Dynon D30

2.3 System Operation

No special operating procedures are required for using the D30. Operating limitations for the D30 are listed in the *D30 Airplane Flight Manual Supplement* document at dynon.com/docs.

2.3.1 Flight Indications

The D30 provides the flight indications listed below. See Figure 2 for locations of the D30's flight indications

- Airspeed Tape
- Indicated Airspeed
- Slip/Skid Indicator
- Bank Angle Indicator
- Turn Rate Indicator
- Vertical Speed Indicator (VSI) w/ Altitude Scale
- Altimeter
- Barometer / Altimeter Setting

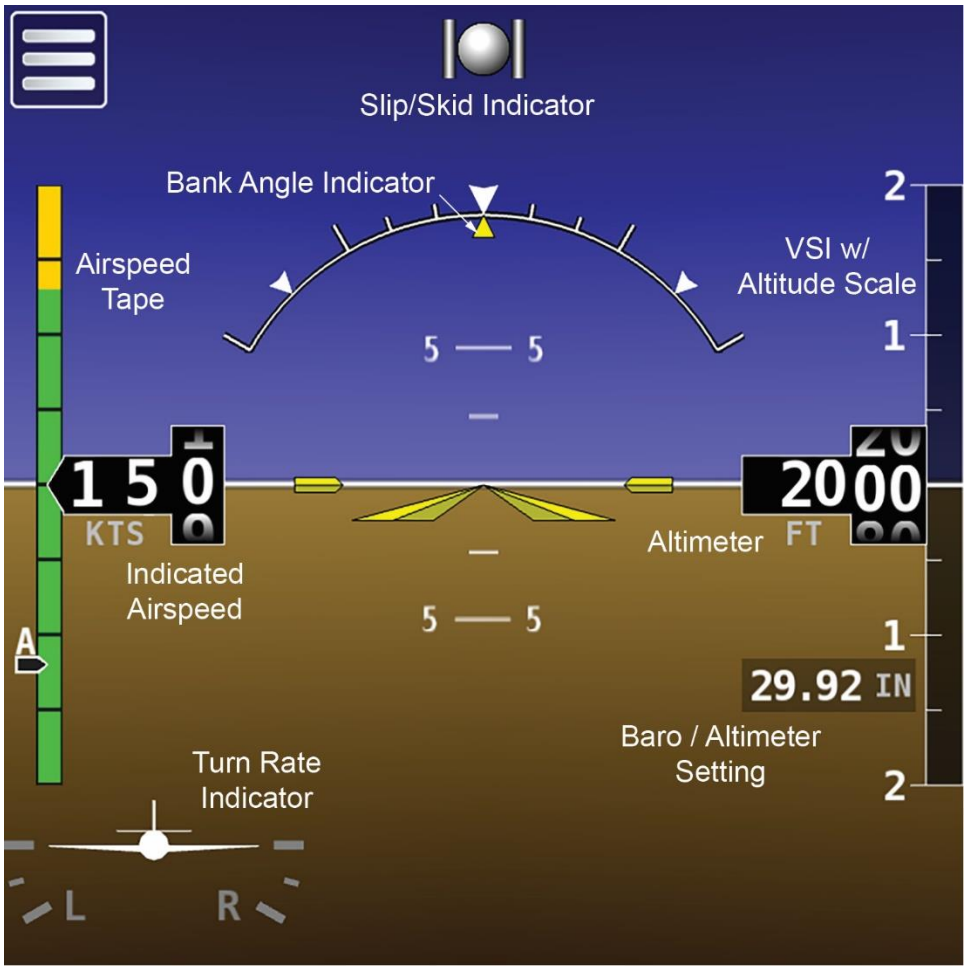

Figure 2: Flight Indications

2.3.2 Start-up and Shut-down

To start-up the D30:

1. Apply power to unit. Unit will start-up.
2. If power is applied and unit does not start-up, then press and hold bezel button for two seconds. Unit will start-up.

Altitude is not displayed until 30 seconds after start-up. If the D30 senses an airspeed or altimeter setting adjustment, then altitude is immediately displayed.

To shut-down the D30:

1. Remove power from unit. The SHUTTING DOWN window is displayed with a *30-second* countdown timer. After countdown, unit will shut-down.
2. Alternatively, press and hold bezel button for two seconds. The SHUTTING DOWN window is displayed with a *3-second* countdown timer. After countdown, unit will shut-down.

2.3.3 Screen Brightness Control

To adjust the screen brightness on the D30:

1. Touch Menu icon (see Figure 2). Main Menu is displayed.
2. Use Brightness slider bar on Main Menu to set screen brightness level.
3. When done, tap 'arrow' icon to close Main Menu.

2.3.4 Altimeter Setting

To change the altimeter setting on the D30:

1. Touch Barometer / Altimeter Setting indicator (see Figure 2). The Altimeter Setting tool appears.
2. Use the slider bar or tap + / — to adjust the altimeter.
3. When done, touch any other part of screen to hide the Altimeter Setting tool and restore Altimeter and Altitude Tape.

3 Installation

This section provides information and instructions for installing the Dynon D30.

3.1 Backup Battery Installation

Per shipping regulations, the D30 is shipped without the backup battery installed. Prior to unit installation, the D30 needs its backup battery installed.

To install the D30's backup battery:

1. On back of unit, loosen captured retaining screw on access plate (see Figure 3), and then remove access plate.
2. Connect backup battery to unit. Unit and backup battery have mating Molex connectors.
3. Gently insert backup battery and wires into unit.

When installing the D30's backup battery, avoid pinching or chaffing the wires against the housing. Exposed wires can short against the housing or each other and cause a battery failure. Ensure the battery wires are routed so that the access plate closes properly.

4. Reposition access plate, and secure with retaining screw.

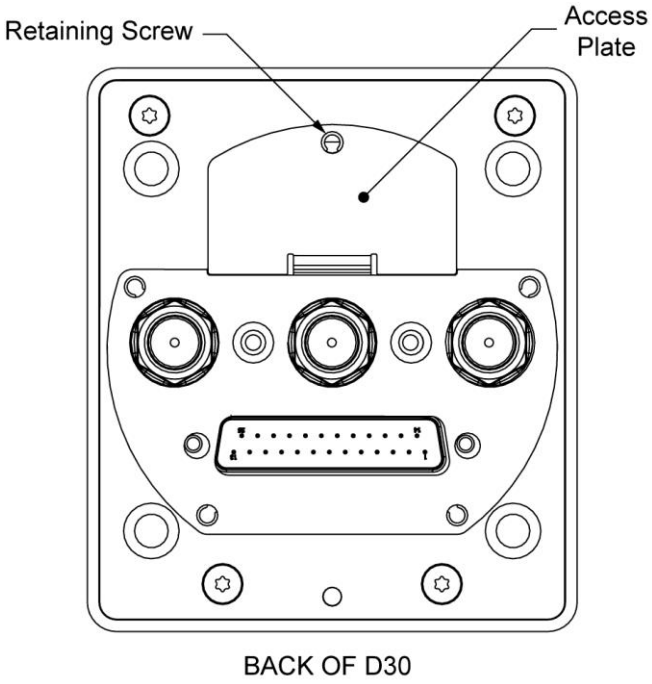

Figure 3: Backup Battery Access

3.2 Unit Installation

The D30 should be installed within the primary maximum field-of-view boundary, as close as practicable to the equipment that displays Primary Flight Information (PFI). According to AC 23.1311-1C, the primary maximum field-of-view is based on vertical and horizontal visual fields from the pilot's eye reference point that can be observed with eye movement and minimal head movement only.

The D30 is designed to mount to the instrument panel in a standard 3-1/8" diameter instrument hole with little modification. See installation guidelines and specifications below for more information.

The D30 is designed as near direct-fit replacement for the Dynon EFIS-D10A.

Observe the following guidelines and specifications when installing a D30:

- Unit should be installed so its bezel is level across aircraft's lateral axis.
- Wire harness extends about 3" from the rear of the unit. (This can be reduced if 90° connector shell is used on the wire harness.)
- A small relief must be cut at the bottom of the 3-1/8" instrument panel hole (see Figure 5).
- If retrofitting an EFIS-D10A with a D30, the holes drilled in the instrument panel for the EFIS-D10A can be reused for the D30's bracket (see Figure 6).
- Front bezel will extend 0.5" beyond the face of the instrument panel.
- Unit will need to be accessed during service; therefore, provide enough slack in the wire harness and the pitot and static lines to remove the unit from the instrument panel without disconnection.
- Avoid placing the unit near sources of heat.

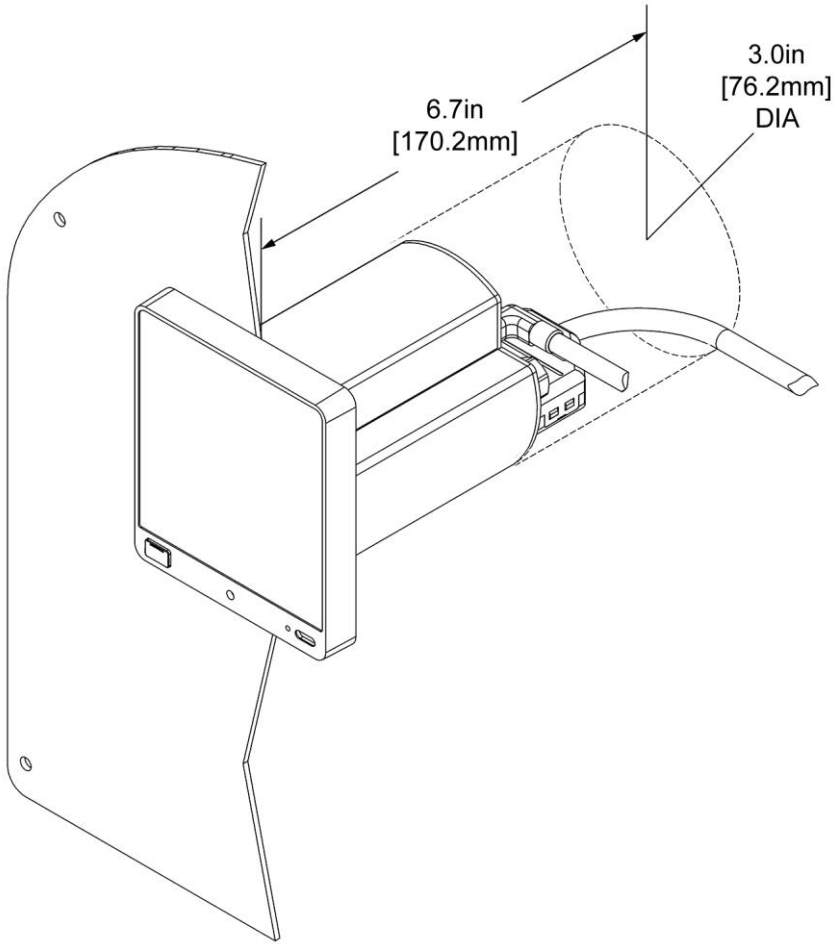

Figure 4: Volume Requirements

To mount the D30 to an instrument panel:

1. If needed, use Figure 5 as a guide to mark and drill holes in instrument panel for mount bracket attachment.
2. Drill small hole or cut a small notch at bottom of instrument hole (see Figure 5) to allow clearance for unit's retaining screw.
3. Deburr cut edges.
4. Feed mount bracket through instrument hole, as shown in Figure 6, and then secure to instrument panel with provided hardware.
5. Complete pitot and static connection (see Section 3.3) and electrical installation (see Section 3.4).
6. Insert unit into instrument hole and mount bracket, as shown in Figure 6.
7. Use 3/32" hex wrench to tighten captured retaining screw that secures unit to mount bracket (see Figure 7). Tighten retaining screw to 3-5 lbs.

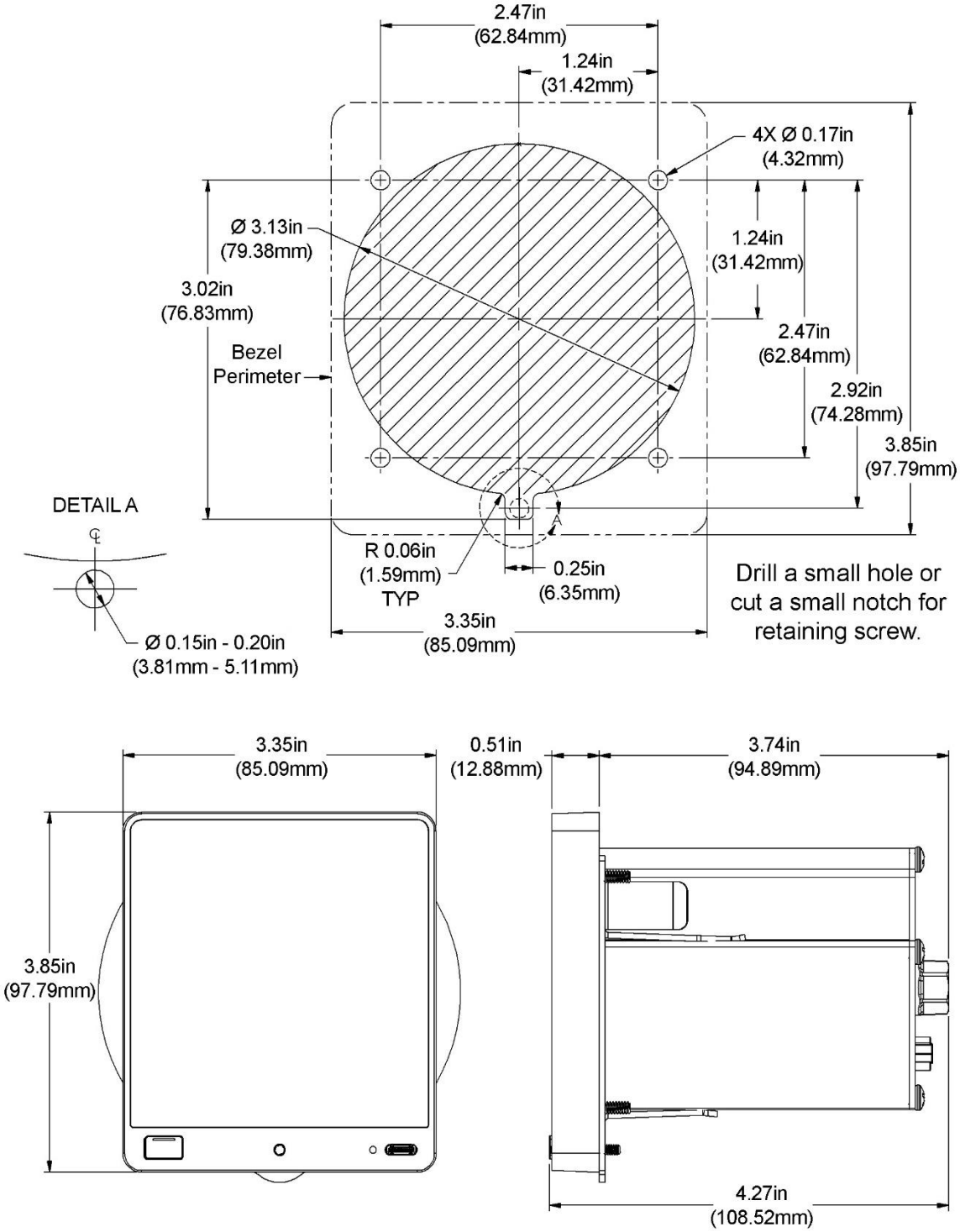

Figure 5: Mounting Dimensions

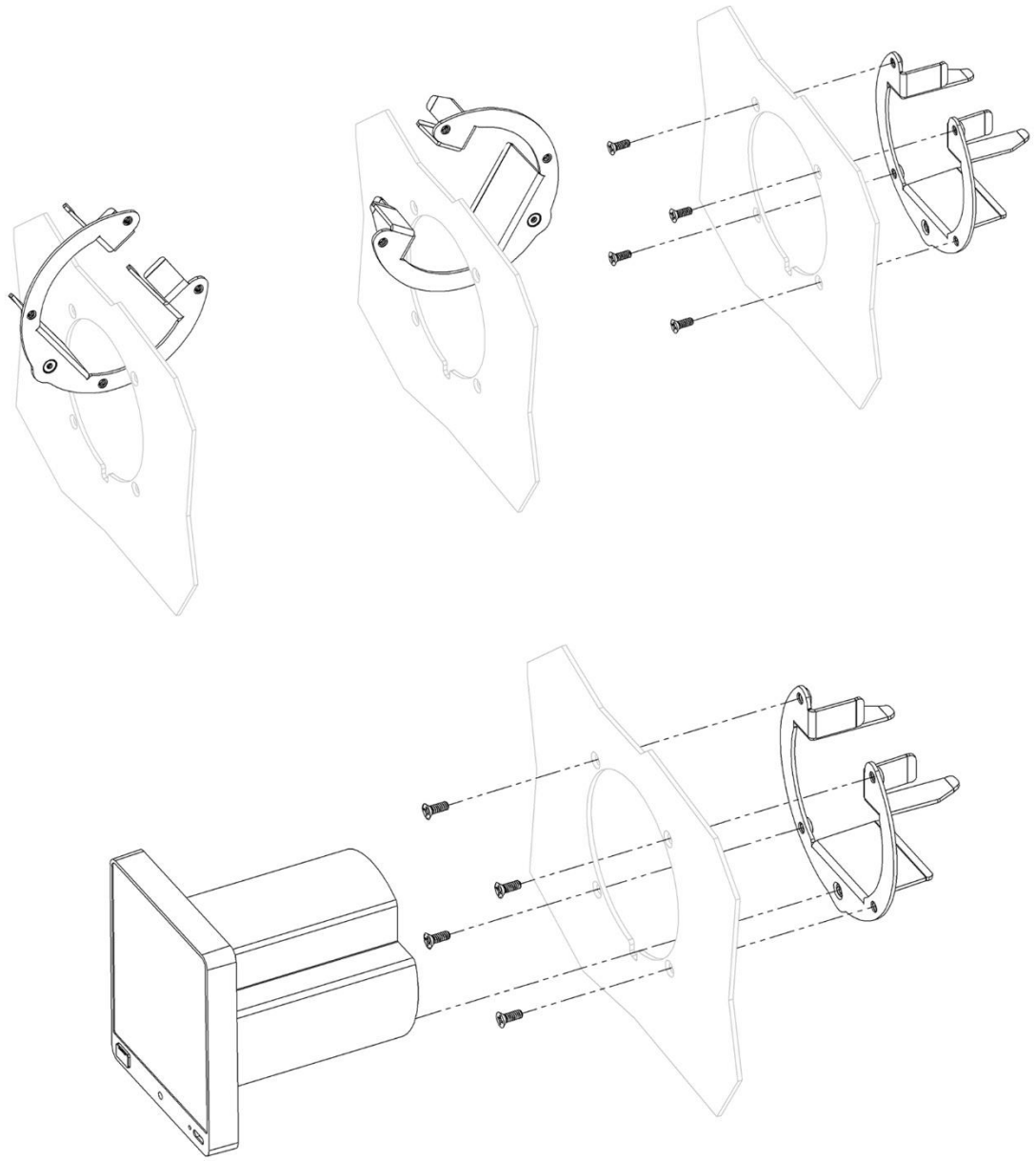

Figure 6: Instrument Panel Installation

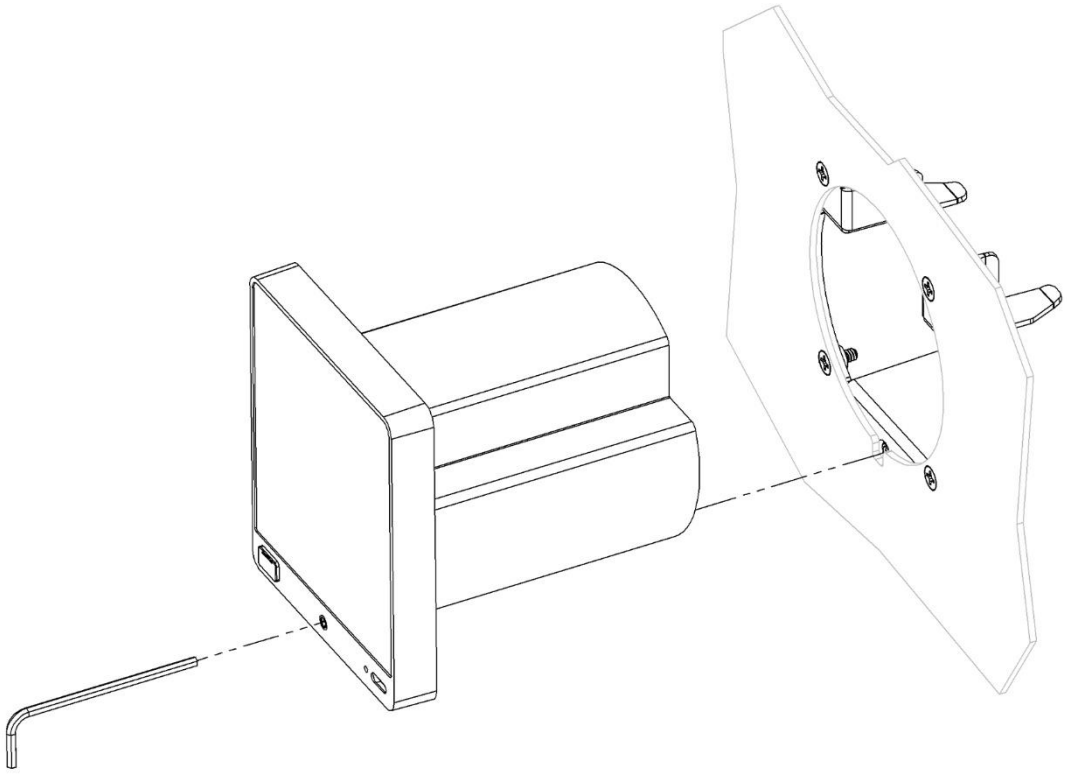

Figure 7: Instrument Panel Attachment

3.2.1 Replacement Hardware

If the provided mounting hardware is lost or damage, replace with the hardware is listed below.

Table 1: Replacement Hardware

DYNON P/N	HARDWARE DESCRITION
100980-001	PHIL SCREW 100 DEG, #6-32, 3/8" L, STAINLESS

3.3 Pitot and Static Connection

The pitot and static ports on the back of the D30 are equipped with 1/8" NPT female fittings. Installers need to source appropriate flexible hose and AN/MS fittings for connection to existing pneumatic tubes/hoses.

To plumb the D30 into the pitot and static systems:

1. Find an appropriate place to connect the D30 plumbing to the airplane's existing pitot and static systems.
2. Measure and cut correct lengths of flexible hoses to connect to the airplane's pitot and static systems.
3. Install AN/MS fittings into ends of flexible hoses for connection to the airplane's pitot and static systems.
4. Route flexible hoses and connect them to the airplane's pitot and static systems using AN/MS fittings.

   Ensure there are no low spots in the flexible hoses that could trap condensation and cause an obstruction.

5. On a bench, remove plugs from the 1/8" NPT fittings on back of unit (see Figure 8). Leave the AoA pipe fitting capped.
6. Apply appropriate thread sealant to AN/MS fittings and hand-thread them into the 1/8" NPT fittings on back of unit.
7. When AN/MS fittings are snug, place a wrench on the unit's 1/8" NPT fittings to prevent them from rotating, and then carefully tighten.

   DO NOT overtighten! If the unit's 1/8" NPT fittings rotate during tightening it may damage its internal components.

8. Connect flexible tubes to the corresponding AN/MS fittings on back of unit.

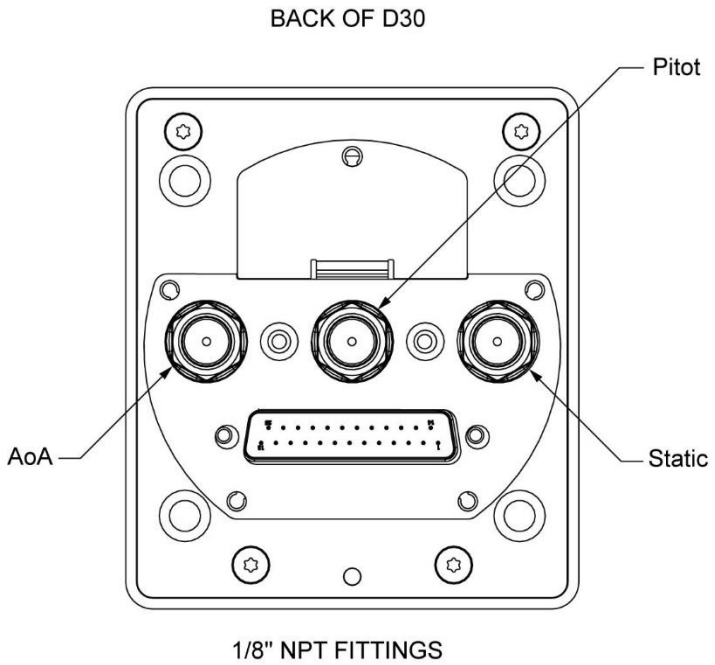

Figure 8: Threaded Pipe Fitting Ports

3.4 Electrical Installation

A separate D25 female wire harness (P/N 104749-000) can be purchased from Dynon that plugs into the D25 male connector on the rear of the D30. The wire harness has designated wires for connection to airplane power (see Table 2 for pin/wire connections).

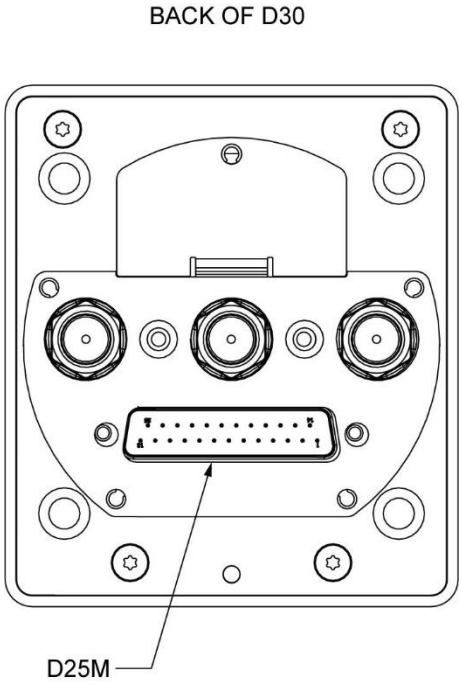

Figure 9: D25 Male Connector

Table 2: Pin/Wire Connections

D30 D25 PIN #	D30 D25 WIRE FUNCTION	D30 D25 WIRE COLOR	CONNECTION / NOTES
1	Power	Red	Power Input 3A Circuit Breaker/Fuse
3	Ground	Black	Ground
All Remaining	Do Not Connect	N/A	Do Not Connect

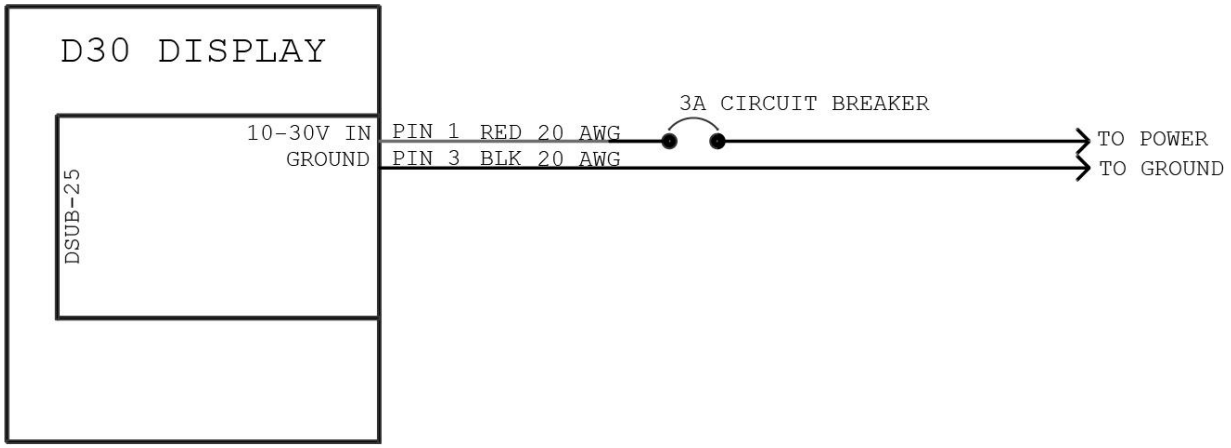

Figure 10: Electrical Connections

3.4.1 Power and Ground Connection

The D30 is compatible with 14V and 28V electrical systems and requires a power supply of 10–30V DC. Power input to the D30 must be protected with an aviation-grade 3A circuit breaker or replaceable fuse.

To connect the D30 to an airplane's electrical system:

1. Make sure aircraft power is disconnected.
2. Connect dedicated 3A circuit breaker or replaceable fuse to appropriate electrical bus. See airplane manufacturer's documentation for guidance.
3. Route Power wire (pin 1) to power source and Ground wire (pin 3) to airframe ground.
4. Support and secure wires to avoid high heat and entanglement with moving components.
5. Use insulated connectors to connect Power wire to breaker/fuse and Ground wire to airframe ground.

3.5 System Check

After the mechanical, electrical, and pneumatic installations, installers need to perform several checks to verify the physical installation of the D30.

3.5.1 Start-up and Shut-down

To start-up and shut-down the D30:

1. Apply power to unit. Unit will start-up.
2. If power is applied and unit does not start-up, press and hold bezel button for 2 seconds. Unit will start-up. If unit still does not start-up, see Section 4 for help.
3. After start-up, make sure following indicators appear without a Red X covering them:
   - Airspeed,
   - Altitude (may take up to 30 seconds to appear),
   - Attitude,
4. If some indicators are not functional, see Section 4 for troubleshooting.
5. To shut-down unit, press and hold bezel button. The SHUTTING DOWN window is displayed with a *3-second* countdown timer. After countdown, unit will shut-down.

3.5.2 Setup Menu Access

To access the D30 Setup Menu:

1. Make sure power is not applied to unit.
2. Push and hold bezel button, and then immediately (within 2 seconds) apply power to unit.
3. Immediately (within 2 seconds) after applying power, release bezel button. The bezel button will rapidly blink red, and the unit will enter the Setup Menu upon start-up.

Button rapidly blinks red when the unit is entering the Setup Menu upon start-up; button slowly blinks green when the unit is starting up normally.

3.5.3 Pitot and Static System Leakage

Test the pitot and static systems for leaks (see Section 5.6).

3.5.4 Pitch and Roll Angle

Check, and possibly adjust, the pitch and roll angles on the attitude indicator (see Section 5.8).

3.5.5 Altimeter Function

Per 14 CFR § 91.411, an altimeter system test must be performed by an appropriately rated person or facility before the airplane can operate under IFR. If testing determines the Altitude indicator requires adjustment, enter the determined altitude offset in the D30 (see Section 5.9).

3.6 Configuration

There are several configuration tasks that must be completed to finalize the installation. This section guides installers through those tasks.

3.6.1 System Configuration

This section details how to configure the D30 per airplane limitations and user preference.

To configure the D30 system settings:

1. Enter Setup Menu (see Section 3.5.2), and then select Settings.
2. Refer to aircraft's POH and configure system settings. See Table 3 for a list of all system settings.

Table 3: System Settings

SETTING	PARAMETERS	ACTION / NOTES
Units		
Speed	Knots MPH KPH	Enter preferred unit of measure for displayed speeds.
Altitude	Feet Meters	Enter preferred unit of measure for displayed altitude.
Pressure	Inches Hg Millibars	Enter preferred unit of measure for displayed pressures.
Temperature	Celsius Fahrenheit	Enter preferred unit of measure for displayed temperatures.
Airspeed		
Options		Select the v-speeds that apply to the airplane. Selected v-speed are then listed in menu.
V_{S0}	<numerical value>	Enter airplane's specified stall airspeed with landing gear and flaps extended.
V_{S1}		Enter airplane's specified stall airspeed with landing gear and flaps retracted.
V_{FE}		Enter airplane's specified maximum airspeed with flaps extended.
V_{NO}		Enter airplane's specified maximum structural cruising airspeed.
V_{NE}		Enter airplane's specified airspeed to never exceed.
V_X		Enter airplane's specified airspeed for maximum altitude gain in shortest distance.
V_Y		Enter airplane's specified airspeed for maximum altitude gain in shortest time.
V_A		Enter airplane's specified design maneuvering speed.
V_O		Enter airplane's specified maximum operating maneuvering speed.
V_G		Enter airplane's specified airspeed for maximum glide.
V_{MC}		Enter airplane's specified minimum airspeed for satisfactory flight with one engine.
V_{YSE}		Enter airplane's specified maximum altitude gain in shortest time with one engine.
Auto Baro		
Auto Baro	Toggle Button On/Off	Enables/disables automatic setting of barometer using last indicated altitude prior to system shutdown after flight.

3.6.2 Zero-pressure Calibration

Installers need to perform a zero-pressure calibration to calibrate airspeed (see Section 5.7).

This page intentionally left blank.

4 Troubleshooting

This section provides information and procedures for troubleshooting issues with the Dynon D30.

4.1 Self-Diagnostics

The D30 includes limited self-diagnostic capability. If a fault or other condition is detected, an alert is displayed on the screen. Table 4 provides a possible cause and recommended action for each alert.

Table 4: D30 Alerts

ALERT	CAUSE	RECOMMENDED ACTION
SHUTTING DOWN <TIMER>	Electrical power has been removed while the airplane is on the ground.	If power was not intentionally turned OFF, inspect/verify the following: • Harness connector and mating connections. • Power connection at circuit breaker and power supply bus. • Power is provided to the electrical bus. If condition persists, contact Dynon Technical Support.
AIRCRAFT POWER LOST	Electrical power has been removed while the airplane is in the air.	Land at nearest suitable airport! Inspect/verify the following: • Harness connector and mating connections. • Power connection at circuit breaker and power supply bus. • Power is provided to the electrical bus. If condition persists, contact Dynon Technical Support.
	D30 is running on backup battery power. More than 30 minutes of battery life remains.	If power was not intentionally turned OFF, inspect/verify the following: • Harness connector and mating connections. • Power connection at circuit breaker and power supply bus. • Power is provided to the electrical bus. If condition persists, contact Dynon Technical Support.
	D30 is running on backup battery power. Less than 30 minutes of battery life remains.	
 (Flashing)	D30 is running on backup battery power and the battery capacity is critical. Device shutdown imminent.	

ALERT	CAUSE	RECOMMENDED ACTION
	The D30 is not detecting the backup battery.	If backup battery was not intentionally removed, inspect battery connector and mating connections. If condition persists, contact Dynon Technical Support.
	The D30 has detected an issue in its software. This message is not an emergency, nor does it make the D30 unairworthy. This issue must be corrected before the next flight.	Follow on-screen instructions to report issue to Dynon Technical Support.
LCD WARMING UP	The D30 has detected low internal temperatures during startup and has turned on an internal heater to warm up the LCD screen.	Normal operations may resume after the alert is removed.
ADAHRS CAL CORRUPT	The D30 has detected an internal issue in its firmware or calibration tables. This issue must be corrected before the next flight.	Contact Dynon Technical Support.

4.2 Unit Does Not Start-up

If unit does not start-up, thoroughly check electrical connections, and retry. If unit still does not start-up, contact Dynon Technical Support.

4.3 Airspeed Incorrect

If the airspeed indicator appears incorrect, the airspeed function may need to be re-calibrated. Perform a zero-pressure calibration (see Section 5.7).

4.4 Airspeed Indicator Frozen or Indicates Zero

If the airspeed indicator is a fixed value of zero, and does not change, or only increases slightly, the pitot sensor and lines may be disconnected or leaking.

- Inspect pitot system for loose or open connections and reconnect and tighten as needed.

If the airspeed indicator is a fixed value that does not change, the pitot sensor and lines may be obstructed. The following must be performed by an appropriately rated person or facility.

- Disconnect the pitot and static systems from all sensing instruments and reverse flush the system with compressed air. Failure to disconnect all sensing instruments will result in instrument damage.

4.5 Altitude Indicator Frozen

If the altitude indicator is a fixed value that does not change, the static sensor and lines may be obstructed. The following must be performed by an appropriately rated person or facility.

- Disconnect the static system from all sensing instruments and reverse flush the system with compressed air. Failure to disconnect all sensing instruments will result in instrument damage.

This page intentionally left blank.

5 Maintenance

This section provides information and procedures for maintaining the Dynon D30.

5.1 Periodic Maintenance

See Table 5 for maintenance tasks that must be performed routinely.

Table 5: Periodic Maintenance

TASK	FREQUENCY	DESCRIPTION / PROCEDURE
Backup Battery Test	Once Every 12 Calendar Months	See Section 5.3.
Zero-pressure Calibration	Once Every 12 Calendar Months	See Section 5.7.
Visual Inspection	Once Every 12 Calendar Months	The D30 needs to be routinely inspected to ensure the continued integrity of the installation: • Inspect unit for secure attachment to mount bracket; inspect mount bracket for secure attachment to instrument panel. • Inspect unit for signs of corrosion. • Inspect condition of wiring, shield terminals, routing, attachment/clamping, and any airframe penetration points. • Inspect display screen, bezel, and buttons for dust, dirt, or obstructions. Clean as needed (see Section 5.2). • Inspect backup battery for corrosion or damage. Replace if needed (see Section 5.4).
Display Backlighting	Once Every 24 Calendar Months	Display brightness may dim over time and not perform as well in direct sunlight. The user must determine by observation when the display brightness is not suitable for intended use. If determined unsuitable, contact Dynon Technical Support.
Altimeter	For IFR Operations, every 24 calendar months in accordance with §91.411	Test the Altimeter system per Title 14 CFR Part 43, Appendix E and document in accordance with §43.9 (see Section 5.9).

5.2 Cleaning

The D30 screen and bezel can be cleaned with any cloth intended for LCD screens, as well as soft cotton cloth dampened with clean water. Avoid using harsh cleaning agents. Take care to not scratch surface of display.

5.3 Backup Battery Test

The following procedure will determine if the internal backup battery meets the 45-minute expected operation duration.

The backup battery needs to be fully charged prior to beginning the test. If backup battery was recently used for more than 5 minutes, allow it to charge on airplane power for at least 4 hours before performing test.

To check the D30 backup battery:

1. Set D30 screen to full brightness (see Section 2.3.3).
2. Remove airplane power from unit. When power is lost, a 30-second countdown window will appear.
3. Touch SHUTTING DOWN countdown timer to allow unit to operate on battery power. Battery icon will appear in upper right corner of screen.
4. Allow unit to operate for 45 minutes.
5. If battery icon *does not* turn red during that time, then battery passed test.
6. If battery icon *does* turn red during that time, then battery failed test and needs to be replaced (see Section 5.4).
7. Before returning to service, restore airplane power to unit and allow battery to charge for 4 hours.

5.4 Backup Battery Replacement

This section provides replacement procedures for the D30 backup battery.

If backup battery replacement requires the unit to be disconnected from the electrical and/or pitot and static systems, it must be performed by an appropriately rated person or facility.

Replacement D30 backup batteries (P/N 104243-000) are available from Dynon or authorized dealers and can be replaced in the field.

To replace the D30 backup battery:

1. Make sure airplane power is disconnected.
2. Use 3/32" hex wrench to loosen retaining screw that secures unit to mount bracket (see Figure 11).
3. Carefully slide unit out.
4. On back of unit, loosen captured retaining screw on access plate (see Figure 12), and then remove access plate.
5. Gently pull battery wires to remove old battery.
6. Disconnect old backup battery from unit and connect new backup battery to unit. Unit and backup battery have mating Molex connectors.
7. Gently insert new backup battery and wires into unit.

   When installing the D30's backup battery, avoid pinching or chaffing the wires against the housing. Exposed wires can short against the housing or each other and cause a battery failure. Ensure the battery wires are routed so that the access plate closes properly.

8. Reposition access plate, and secure with retaining screw.
9. Carefully slide unit into instrument panel.
10. Use 3/32" hex wrench to tighten retaining screw that secures unit to mount bracket (see Figure 11). Tighten retaining screw to 3-5 lbs.
11. Before returning to service, restore power to unit and allow new battery to charge for 4 hours.

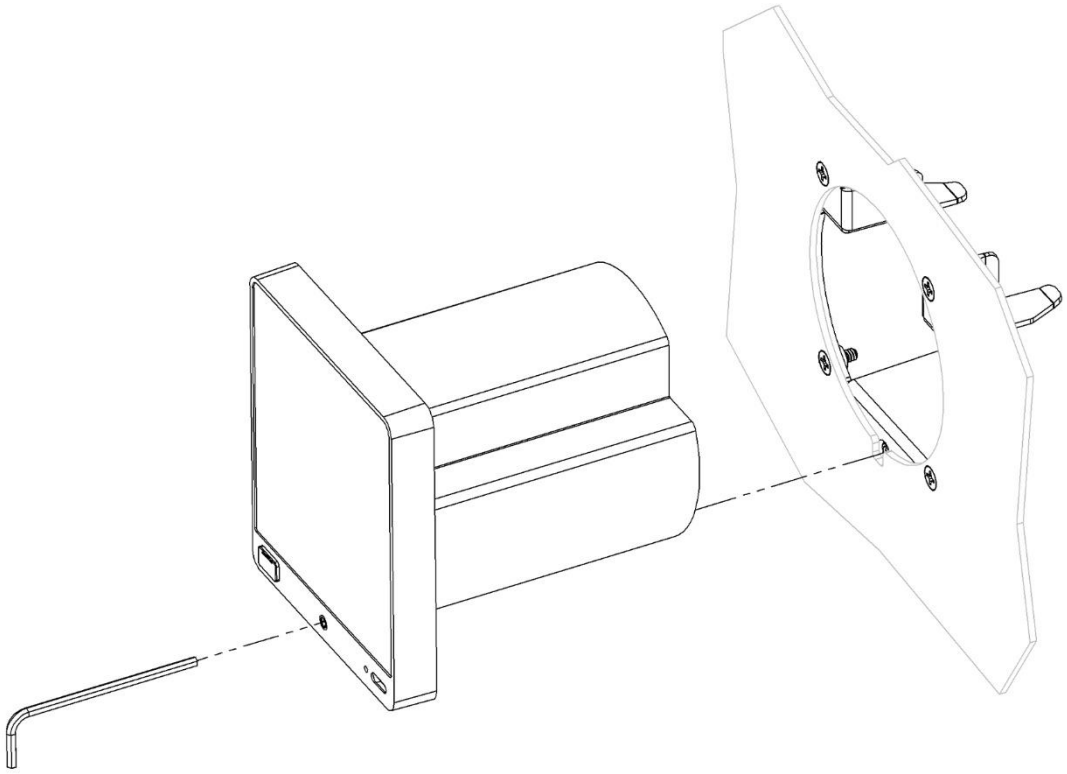

Figure 11: Unit Removal and Re-installation

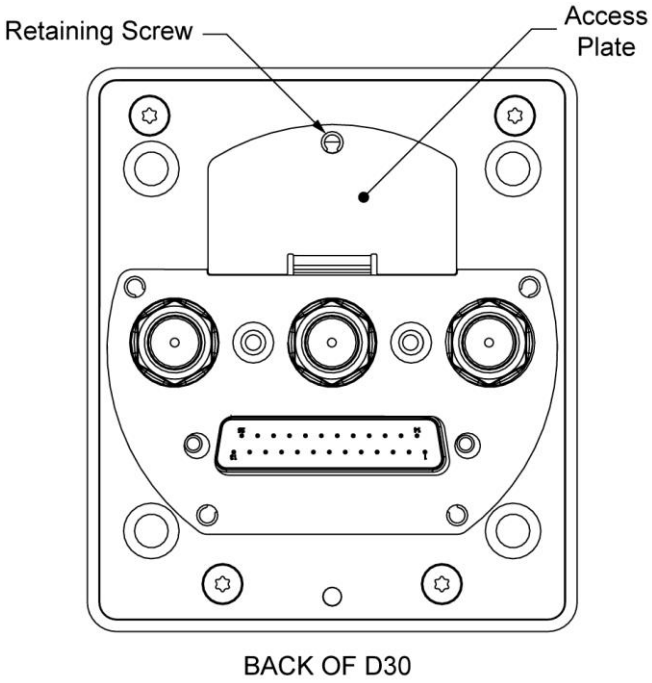

Figure 12: Backup Battery Access

5.5 Unit Removal and Replacement

This section provides procedures for removing and replacing the D30.

The following procedure must be performed by an appropriately rated person or facility.

To remove the D30:

1. Make sure airplane power is disconnected.
2. Use 3/32" hex wrench to loosen retaining screw that secures unit to mount bracket (see Figure 11).
3. Carefully slide unit out.
4. Disconnect harness connector from back of unit (see Figure 13) by loosening retaining screws and pulling out connector.
5. Disconnect and plug pitot and static flexible tubes from back of unit (see Figure 13). Mark tubes for identification during re-installation.
6. Use a wrench to loosen and remove AN/MS fittings from 1/8" NPT fittings on back of unit. Retain AN/MS fittings for re-installation.
7. Cap open 1/8" NPT fittings.

To install the D30:

1. Remove caps from 1/8" NPT fittings on back of unit (see Figure 13). Leave AoA pipe fitting capped.
2. Apply appropriate thread sealant to AN/MS fittings and hand-thread them into the 1/8" NPT fittings on back of unit.
3. When AN/MS fittings are snug, place a wrench on the unit's 1/8" NPT fittings to prevent them from rotating, and then carefully tighten.

   DO NOT overtighten! If the unit's 1/8" NPT fittings rotate during tightening it may damage its internal components.

4. Unplug and connect flexible tubes to the corresponding AN/MS fittings on back of unit.
5. Plug harness connector into mating connector on back of unit (see Figure 13), and then hand-tighten retention screws to secure.
6. Carefully slide unit into instrument panel.
7. Use 3/32" hex wrench to tighten retaining screw that secures unit to mount bracket (see Figure 11). Tighten retaining screw to 3-5 lbs.

8. If replacing original unit:
   A. Apply power to unit. If unit does not start-up, see Section 4 for troubleshooting.
   B. Perform pitot and static leakage tests (see Section 5.6).
9. If replacing with new unit, perform all system check procedures (see Section 3.5) and configuration procedures (see Section 3.6).

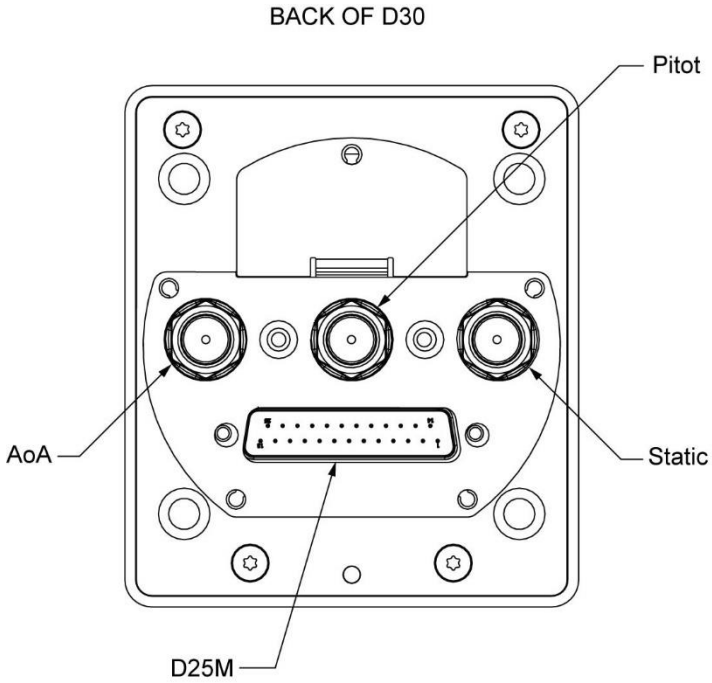

Figure 13: Pneumatic Pipe Fittings and D25M Connector

5.6 Pitot and Static Leakage Tests

These are performed to make sure there are no leaks in the pitot or static lines. The tests need to be performed during initial installation and then anytime the pitot and static tubes are removed from the D30.

When performing the leakage tests, put the D30 into Pitot Static Test Mode. Not doing so can corrupt the D30's internal calibrations.

To perform pitot/static system tests:

1. Enter Setup Menu (see Section 3.5.2), and then select Calibration > Pit./Stat. Test.
2. Touch Enable. The Pitot Static Test Mode notification bar appears on screen.
3. Perform pitot and static leakage tests per Title 14 CFR Part 43, Appendix E.
4. Service systems as needed.
5. Disable Pitot Static Test Mode:
   - Touch Pitot Static Test Mode notification bar on screen, or,
   - Touch Main Menu icon, select Setup Menu > Calibration > Pit./Stat. Test, and then touch Disable.

5.7 Zero-pressure Calibration

This calibration samples pitot and static pressures. This calibration needs to be performed during initial setup to calibrate airspeed, and as needed if airspeed indicator appears incorrect.

This calibration should be performed in a windless environment to provide the best possible Indicated Airspeed (IAS) readings at very low airspeeds.

To perform zero pressure calibration:

1. Enter Setup Menu (see Section 3.5.2), and then select Calibration.> Zero Press Cal.
2. Touch Acquire, and then follow on-screen instructions.

5.8 Pitch/Roll Angle Check & Adjustment

This section provides instructions for checking and adjusting the pitch and roll angles on the attitude indicator to compensate for a tilted instrument panel or unlevel installation. This calibration should be considered a configuration step that does not need to be performed routinely.

Pitch angle calibration is not the same as a parallax adjustment on a mechanical attitude indicator. Additionally, this calibration should not be used to "zero-out" pitch when the airplane is at an attitude other than level.

Pitch angle can be adjusted ±30° to compensate for tilted instrument panels; roll angle can be adjusted ±6°.

To check and adjust the pitch and roll angles:

1. Level airplane according to manufacturer's instructions.
2. View attitude indicator on screen.
   - If attitude indicator *is* aligned with horizon indicator, no further action is required.
   - If attitude indicator *is not* aligned with horizon indicator, complete remaining steps.
3. Enter Setup Menu (see Section 3.5.2), and then select Calibration > Pitch/Roll.
4. Tap up/down arrows to increase or decrease angle as needed to correct pitch on attitude indicator.
5. Tap left/right arrows to increase or decrease angle as needed to correct roll on the Attitude indicator.
6. Press ACCEPT.

5.9 Altimeter Function Testing & Altitude Offset

The D30's altimeter function must be tested in accordance with 14 CFR, Part 43, Appendix E by an appropriately rated person or facility.

When performing the Altimeter Function Test, put the D30 into Pitot Static Test Mode. Not doing so can corrupt the D30's internal calibrations.

To perform the altimeter function test:

1. Enter Setup Menu (see Section 3.5.2), and then select Calibration > Pit./Stat. Test.
2. Touch Enable. The Pitot Static Test Mode notification bar appears on screen.
3. Perform altimeter function tests per Title 14 CFR Part 43, Appendix E.
4. Determine offset value.
5. Disable Pitot Static Test Mode:
   - Touch Pitot Static Test Mode notification bar on screen, or,
   - Touch Main Menu icon, select Setup Menu > Calibration > Pit./Stat. Test, and then touch Disable.

To enter an altitude offset:

1. Make sure altimeter setting is correct (see Section 2.3.4 for instructions).
2. Enter Setup Menu (see Section 3.5.2), and then select Calibration > Altitude Offset.
3. Enter the offset value as determined by testing.
4. Press OK.

5.10 System Software Updates

Occasionally, Dynon will release new system software for the D30. When this occurs, Dynon will send notification to registered owners.

To download system software:

1. Navigate to Dynon's software download website: dynon.com/download.
2. Download latest software file (.dyn) to a USB drive. The file must be on root directory of USB drive or will not be recognizable by the D30.

To update system software:

1. While D30 is *OFF*, use a USB-C adapter to insert USB drive into USB-C port on D30 bezel.
2. Turn D30 *ON* and wait, and then follow on-screen instructions.
3. When finished, remove USB drive and adapter from USB-C port.

Leaving a USB drive and/or adapter in the USB-C port or using the USB-C port to charge electronic devices is prohibited.