TABLE OF CONTENTS

Section **Page**

1. *Revisions* 2
2. *Read This First* 2
3. *Instrument Labeling* 5
4. *Primary TSO Label* 5
5. *Operation and Abbreviations* 6
6. *Remote Alarm Light EDM 900* 7
7. *Locating and Installing the Indicator and Remote Alarm Display (RAD and Alert Light)* 10
8. *EDM-900/930 Key information installation* 12
9. *Routing the Wiring Harnesses* 13
10. *Pressurized Aircraft wire Routing* 13
11. *Power Connection* 14
12. *Probe Wiring* 14
13. *Exhaust Gas Temperature Probe (EGT) Installation* 15
14. *Cylinder Head Temperature (CHT) Probe Installation* 16
15. *Radial Engine CHT (spark plug gasket)* 16
16. *Outside Air Temperature (OAT) Probe Installation* 16
17. *Oil Temperature Probe Installation* 17
18. *Oil Pressure Sensor Installation* 17
19. *Fuel Pressure Sensor Installation using combination sensor* 18
20. *Ammeter Shunt Installation* 19
21. *General Fuel Flow Transducer Installation* 20
22. *Fuel Level Sender Wiring Types* 22
23. *Fuel Flow Totalizer, Refuel Question* 28
24. *GPS Interface* 28
25. *Manifold Pressure (MAP) Sensor* 28
26. *RPM Sensor installation* 29
27. *EDM-900/930 Specifications and Limitations* 31
28. *EMI Radio Test and functional check:* 32
29. *Component Parts* 33
30. *Weight and Balance Data* 35
31. *Pilot Programming* 35
32. *Programming the HP Constant* 36
33. *Programming the MAP* 36
34. *Selecting Fuel Pressure Type (EDM-900 only)* 36
35. *Customizing Non-Primary Data (EDM900 only)* 37
36. *K Factor* 37
37. *Fine tuning the K Factor* 38
38. *Adjusting the K Factor* 39
39. *Programming Accumulate Trip Total* 39
40. *Trouble Shooting* 40
41. *GPS Interface Diagnostics* 41
42. *Connector Pin Assignments on EDM, J1 through J5* 42
43. *Connector Pin Assignments on EDM, J1 through J5* 43
44. *J3 RPM, MP, Oil-P* 46
45. *Appendix A Connector Pin Assignments on EDM, J1-J2 Only with ARINC 429* 51
46. *Appendix B ICA* 52

The Owner of the EDM-900/930 must keep this manual

J.P. INSTRUMENTS
PO BOX 7033
HUNTINGTON BEACH CA

1. *Revisions*

REV	Description	Date	Approval
G	Added new pictures of 900 and 930, page 6. Abbreviations page 4. Revised how the JPI data base functions, page 3. Added revision box. Page 2. Added fuel level calibration, page 22. Renumbered all pages.	9-28-2011	JFP
H	Revised to include new trouble shooting section for ICA and renumber pages. Updated pressure sensors to capsadense	12-02-2011	JFP
I	Revised TSO Label to show lighting change and added ARINC 429 wire chart	1-18-2013	JFP
J	Updated Part Numbers and Added new ICA and Pressure bulkhead paragraph	5-24-2014	JFP
K	Updated for new features adding digital fuel gauges with fuel flow monitoring per the "Flight manual"	4-08-2016	JFP
L	Improved wire list.	2-12-2020	JFP
M	Added CIES note	7-10-2021	JFP
N	Revised Oil Pressure sensor, MAP sensor and P3 harness	10-15-2025	JFP

2. *Read This First*

- The following notes apply to a new installation. **Read this section before proceeding**.
- If you are installing **CIES** sender for fuel level DO NOT get the power to drive the **CIES** senders from the EDM but install an independent power source with it's own CB.
- The JPI warranty found in the back of the pilots guide clearly states that JPI will replace defective parts under warranty, **but does NOT cover labor to remove or install any parts**.
- The most common cause of probe problems is poor terminal crimps. Crimp ring terminals with AMP tool or equivalent. **Fold back the wire double before crimping terminals.**
- Do not use aluminum fittings or Teflon tape or pipe sealant with the FXT-201 or FXT-231 fuel flow transducer.
- Write down the K-factor engraved on the side of the fuel flow transducer here _____. Once the transducer is installed and covered with the fire sleeve, you will not be able to access this K factor.
- Determine the locations of all holes before drilling to ensure that nothing interferes with the probe, clamp, clamp screw or wire.
- Provide service loops at the instrument so that it can be moved for maintenance or troubleshooting.
- Thermocouple wire length is not critical. Trim to required length, allowing for service loops at the engine so that probes can be swapped with probes on adjacent cylinders for troubleshooting purposes.
- Dress all wires away from high temperature components such as exhaust stacks.
- Never splice thermocouple wire using copper wire. Use only K-type thermocouple wire. Solder using zinc chloride flux such as Nokorode brand – rosin flux alone will not work.
- Observe correct polarity on all probe wires. Connect like colors together (red to red, yellow to yellow).
- **The instrument must be grounded at the engine**, not at the avionics ground.
- Record the installation of the EDM-900 or EDM-930 on a FAA form 337. Make an entry in the aircraft logbook.

- Note: Removal of probes, sensors and the instrument is the reverse of the installation procedure.

Do not install a non-certified EDM-900/930 in a certified aircraft. A certified EDM-900/930 lists see AML
.
If the EDM-900/930 is configured to monitor the aircrafts fuel tanks, the EDM-900/930 must be calibrated to the aircraft fuel system and the EDM-900/930's accuracy must be verified before flying the aircraft.

Before allowing the aircraft to be flown, verify the instrument markings displayed on the EDM-900/930 screens are accurate with the aircraft's POH for every function displayed on the EDM-900/930.

The use of the EDM-900/930 requires recurring training for any pilot who will be flying the aircraft in which it is installed. Recurring training should include reading the EDM-900/930 Installation Manual and seeking a flight instructor for proper interpretation of information being displayed to the pilot.

Fuel Level Accuracy Limitations:

1. Angle of Attack - The EDM-900/930 must be calibrated with the aircraft in a cruise angle of attack. If the aircraft is in an angle of attack other than cruise, the EDM-900/930 may display inaccurate fuel levels (depending on the mounting location and type of sensor used). If your aircraft does not sit at a cruise angle of attack when on the ground, it may not display accurate fuel levels. Test your aircraft at different angles of attack to see the effects on the EDM-900/930 fuel level readings.

2. Full Fuel Readings - As a tank is filled the fuel sensor may not be able to detect the fuel entering the upper corners of the fuel tank. If this is the case with your sensor, the EDM-900/930 will display lower fuel levels than the actual fuel in the tanks when the tanks are full. When the fuel level drops to a point where the fuel sensor starts to detect a change, the displayed fuel level should be accurate. Check the accuracy of your system by comparing the displayed fuel levels on the EDM-900/930 to the fuel levels listed in the flight manual at each fill up.

3. Low Fuel Readings - Do not rely on the EDM-900/930 to determine the fuel level in the tank for an indicated tank level below 1/8. You should always fly the aircraft in such a manner as to maintain at least the FAA minimum fuel requirements in the aircraft at all times.

4. Improper Calibration - If the EDM-900/930 has not been properly calibrated it will not display accurate fuel levels in the tanks. It is important you verify the accuracy of the EDM-900/930. Always crosscheck your measured fuel levels in the tanks with the readings on the EDM-900/930 before each flight.

5. Poor Connections - Poor connections between the wires leading from the EDM to the fuel sensors can become intermittent. An intermittent connection most likely will show up as wandering or inaccurate readings on the EDM-900/930. Always crosscheck your measured fuel levels in the tanks with the readings on the EDM-900/930 before each flight.

6. Defective Fuel Level Sensors - Fuel sensors can become intermittent or change resistance with age. It is not uncommon to find intermittent problems even in new sensors. An intermittent problem with a fuel sensor most likely will show up as wandering or inaccurate readings on the EDM-900/930. Always crosscheck the measured fuel levels in the tanks with the readings on the EDM-900/930 at each fill up. If you ever find an inaccuracy issue or any other problem with a fuel level display on the EDM-900/930, troubleshoot and fix the problem before the next flight.

DETERMINE THE FUEL LEVELS IN THE AIRCRAFT.

1.The use of the EDM-900/930 does not eliminate or reduce the necessity for the pilot to use good flight planning, preflight and in-flight techniques for managing fuel. It is important the pilot adopt the practices listed below. If you are not familiar with these techniques, contact the FAA to acquire proper training.

2. Flight Planning - Always calculate the fuel requirement for each leg of a flight, including any

alternate plans for bad weather. Keep this information available in the aircraft during the flight. Keep a chart of the published fuel flows for various flight/engine conditions in the aircraft. Keep a chart of the measured fuel flows for various flights in the aircraft. Measured fuel flows can be considerably different from published figures. This usually is due to old, inaccurate engine instruments.

3. Preflight - Do not rely on the EDM-900/930 to determine the fuel level in the fuel tanks. The pilot must visually check/measure the fuel levels in the tanks before every takeoff. Crosscheck the measured fuel levels with the displayed levels on the EDM-900/930. Also, crosscheck these levels with the fuel requirements for the flight listed in your flight plan.

4. In Flight - Make the EDM-900/930 part of your normal instrument scan. Crosscheck the fuel levels displayed on the EDM-900/930 with your flight plan at each leg of the flight or every 30 minutes (whichever happens first). If there is a discrepancy, land the aircraft at the nearest airport and verify the fuel levels. Discrepancies should be taken seriously.

5. New Pilot or Owner of the Aircraft - If there is a new pilot or owner of the aircraft, it is the previous aircraft pilot/owner's responsibility to insure the new pilot has read this manual and is aware of any accuracy limitations and other important considerations. All limitations and operating characteristics learned from operating the EDM-900/930 must be passed on to the new pilot/owner.

3. *Instrument Labeling*

The TSO label on the instrument is marked as to the instrument configuration.
The part number of the instrument is as follows:
Model designation system by part number for EDM-900/930

Model Number / Part Number	Description
EDM-900 PN 790000-A- [XXX]	TFT (liquid crystal) Type Display
EDM-930 PN 790000-C- [XXX]	TFT (liquid crystal) Type Display

INSTRUMENTS THAT CAN BE PRIMARY IF IN POH

CHT 4-9	FUEL FLOW	RAD Alert Light
OIL TEMP	FUEL PRESS	TIT
OIL PRESS	RPM	CDT
	MAP	FUEL Quantity

NON-PRIMARY INSTRUMENTS

EGT 4-9	Time to empty	Fuel Remaining Fuel USED
OAT CARB	Required to WP	Shock Cooling
Volts Amps	Reserve at WP	Differential EGT Normalize
IAT	MPG	Percent of HP

Example PN 790000-(X)-(XXX) (X) denotes EDM-900 or EDM-930, (XXX) denotes Part Number for a specific aircraft with or without and engine STC. Each PN is specific to a Make and Model Aircraft with or without STC. In which the information is gathered from the Aircraft POH or STC Data sheet.

	Aircraft type w/engine STC No. if applicable	JPI assigned Data Base Part No. per Limits found in the POH or engine STC for a specific aircraft	Part No. Displayed on 930 RAD at Start-up or 900 message area
	Cessna 182-P	534	790000-X-534
	Cessna 182-P, STC12345NW	875	790000-X-875

4. *Primary TSO Label*

[ ] PN 790000-A-[xxx], Wt:1.7 lbs
[ ] PN 790000-B-[xxx], Wt:1.7 lbs
[ ] PN 790000-C-[xxx], Wt:2.7 lbs
[ ] PN 790000-C-[120], Wt:2.7 lbs

SN: xxxxx

J.P. Instruments, Inc
Costa Mesa, CA, 92626

MFG DATE: xx/xx/xxxx

TSO-C43c, CLASS 1A TSO-C45a, TYPE TSO-C55c, TYPE II
TSO-C44b TSO-C47, TYPE II TSO-C49b, TYPE I/II

Bld-1: xxx.xx.xxxx
POWER: 14 / 28 VDC
CURRENT: 4.0 AMP MAX

DO-160E ENV.CAT. D1XBAB[SBM]XXXXXXABBBAWM[B3K33]XXA
DO-178B LEVEL-C H/W 7999-x S/W PN 7990-x

Note: EDM-900/930/950 TSO-C55, incomplete system for Type I (Float Inst.), no sensor tested
Note: EDM-950 (Display-less) incomplete system for all TSO's
Note: PN790000-C-120 incomplete system Display only.

5. *Operation and Abbreviations*

The EDM-900/930 is a combined electronic indicating system which simultaneously displays to the pilot powerplant and aircraft systems operating parameters. It includes the following indicating systems; replacing all previous primary digital and/or analog instruments: Message Area Abbreviation in parenthesis. (X)* denotes cylinder No.

Gauge Function	Message Area Alarm Abbreviation
Primary	**Primary**
Engine rotational speed	RPM xxxx
Engine Manifold Pressure	MAP xx.x in hg
Engine Cylinder Head Temp	CHT2 xxx ^{o}F
Engine Oil Temperature	O-T xxx ^{o}F
Engine Oil Pressure	O-P xxx ^{o}F
Fuel Pressure	F-P xx PSI
Fuel Flow to engine	F-F xx.x GPH
Comp. Discharge Temp.	CDT xxx ^{o}F
Turbine inlet Temp. Left side	TIT-L xxxx ^{o}F
Turbine Inlet Temp. Right side	TIT-R xxxx ^{o}F
Single Turbine Inlet Temp.	TIT xxxx ^{o}F
Non-Primary	**Non-Primary**
Exhaust Gas Temp.	EGT2 xxxx ^{o}F
Shock Cooling of CHT	CLD xx ^{o}/MIN
Differential Temp. of EGT	DIF xx ^{o}F
Bus Voltage	Volts xx.x
Amperage Load	AMPS xx
Outside Air Temp.	OAT xx ^{o}F
Estimated Time to Empty	Est. T to E xx:xx H:M
Fuel used to date	USED xx.x GAL
Estimated Remaining fuel	Est. REM xx GAL
Estimated Fuel required to Waypoint	Est. WP REQ xx GAL
Estimated Fuel Remaining at Waypoint	Est. WP RES xx GAL
Nautical Miles per Gallon	ECON xx.x MPG
Brightness, Dim control	DIM/BRT

6. *Remote Alarm Light EDM 900*

The remote alarm light is a Red or Yellow light depending on the alarm condition. The EDM-900 incorporates a single light that alerts the pilot that a problem existing within the engine. This light is placed in with the primary flight instruments and is required for primary installation. It is a single light that changes color with condition and the label associated with the light must be lit by a post light or such that you can see the word “ENGINE”.

6.1 *Remote Alarm Display (RAD) Operation EDM-930*

The RAD is a 0.2” high, 8 character independent display found on the EDM-930 only. The RAD will still function if the main display is inoperable. An alarm—such as the CHT is 480° on cylinder number 2—is displayed as 480CHT2. The label CHT2 will flash whenever an over-temperature exists and will extinguish when the temperature falls below the limit temperature. Other alarms would be displayed as, for example: 2780 RPM.

The RAD is located directly in front of the pilot and displays digital caution and limit exceedances when any of the parameters have reached its preset trigger point. Whenever limit alarms are not triggered, the RAD continuously displays MAP and RPM.

On initial startup or whenever power is turned on, the words EDM-930 PRIMARY” are displayed, followed by the make and model of the aircraft with STC information for which the primary limits were set

Alarm hierarchy for the EDM-900/930

When a measurement limit is reached, the pilot should momentarily depress the STEP button on the EDM-900/930 instrument to extinguish the particular flashing alarm acronyms. If another function has also reached its limit, that label will then begin to flash. The pilot should continue to monitor the affected parameters as he would if a conventional analog display had reached a limit. The bar graph functions of CHT, EGT, and TIT remain displayed for easy reference should one of these limits be reached. Alarm hierarchy is shown in the table below.

1. OILP_LO.	**6. FLVL.**	**11. CLD.**	**16. AMPS.**
2. FP_LO.	**7. REM.**	**12. RPM.**	**17. CDT.**
3. OILT_HI.	**8. FP_HI.**	**13. OILT_LO.**	**18. RES.**
4. CHT.	**9. MAP.**	**14. VOLTS.**	**19. EGT.**
5. TIT.	**10. DIF.**	**15. OILP_HI.**	**20. Fuel Flow.**

6.2 Dimming

Automatic dimming is provided to dim both the panel display and the remote alarm display. Dimming can also be accomplished manually to change the Automatic setting. Button #3 initiates the manual Dim function and shows which button to press for Dim or Bright changes. The display starts up in the max brightness mode.

RAD

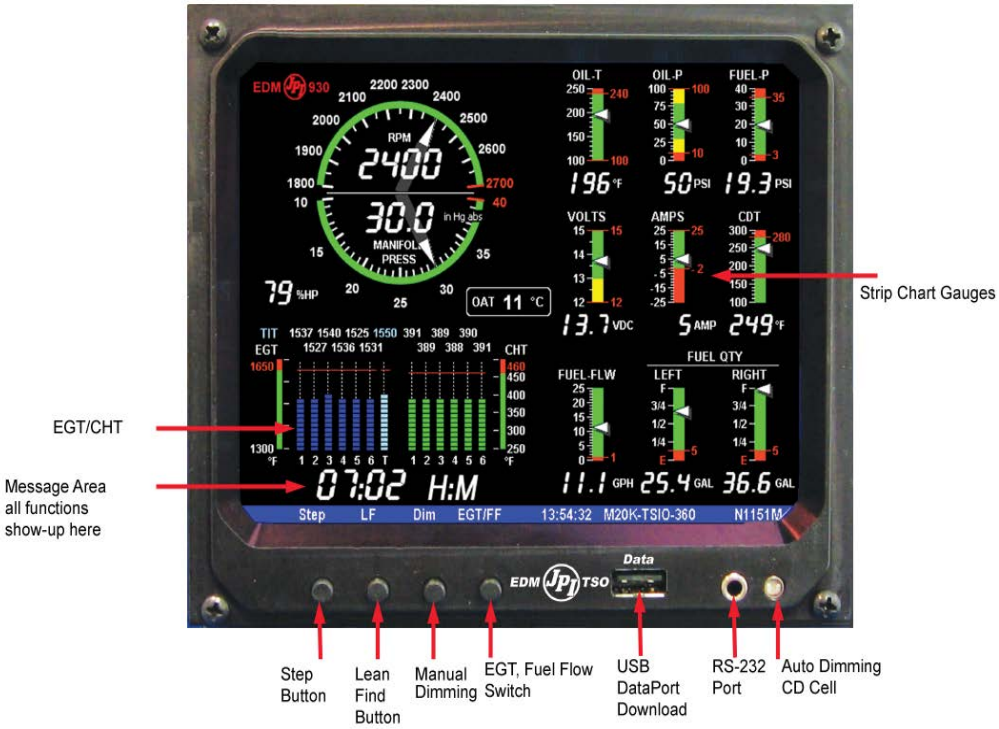

EDM-930 Display

EDM-900 TFT Flat panel display
Portrait Mode

Remote Alert Light comes with the placard "Engine"

EDM-900 TFT Flat panel display

Landscape Mode

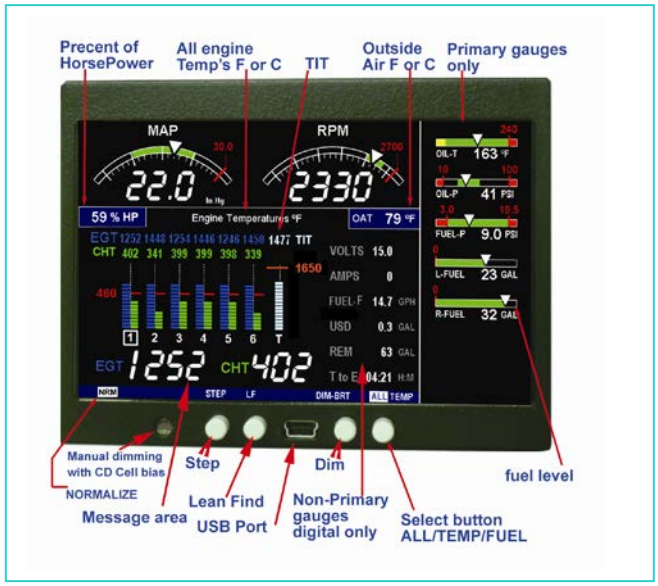

EDM-900 system mounts in a 3.125 inch diameter instrument panel hole in either a portrait or landscape position depending on the panel hole location. By holding the Step button (First button on the left) for approx. 10 seconds an arrow will appear on the display showing which way the rotation will use as up. Use the LF button (Second button from the left) to index the rotation arrow. When the proper position is achieved, Tap STEP to save the new rotation. At this point proper rotation will be saved and the unit will reboot to the new orientation. The rotation function will not be allowed if the engine is running.

7. *Locating and Installing the Indicator and Remote Alarm Display (RAD and Alert Light)*

Single Engine Aircraft EDM-900/930

A) The EDM-900/930 display should be located as close as possible to the pilot with an unobstructed view and for easy access to the buttons on the instrument. The least desirable view angle is landscape looking up. To improve the view angle call the factory. A remote display is also provided for alarm indications and should be directly in front of the pilot.

B) The RAD PN-790749 mounts in a 5/8 inch hole in the panel directly in front of the pilot for the EDM-930 and an alert light for the EDM-900 is mounted in a 3/8" diameter hole.

The diagram below should be used as a guide for cutting and drilling the mounting and buttonholes in the instrument panel. The dimensions shown are for the finished cutout. Allow extra clearance for any panel finish such as powder coat. The EDM mounts from behind the panel through this cutout. Fabricate the appropriate cut-out using the fig below as a guide. If the panel has too many holes for a clean installation, it is recommended that a 0.10" aluminum overlay panel be constructed and installed over the original instrument panel and the EDM be installed into this overlay panel. The Remote Alarm Display PN-790749 mounts in a 5/8 inch hole above the Attitude Gyro / D.G. / HIS, +/- 0.5 inches from their centerline directly in front of the pilot.

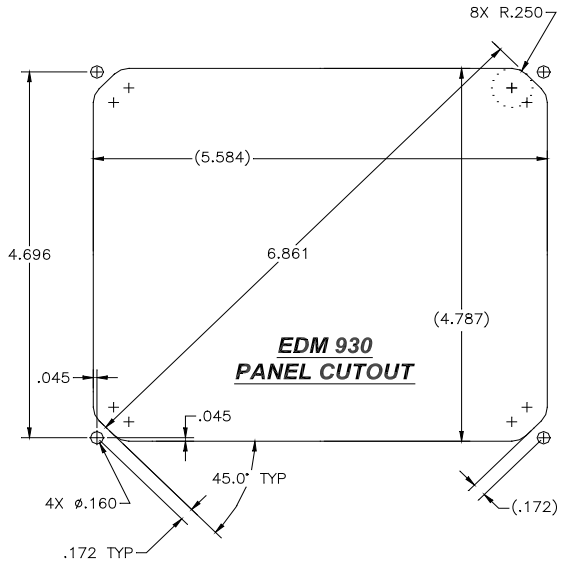

4.1 Figure 1:

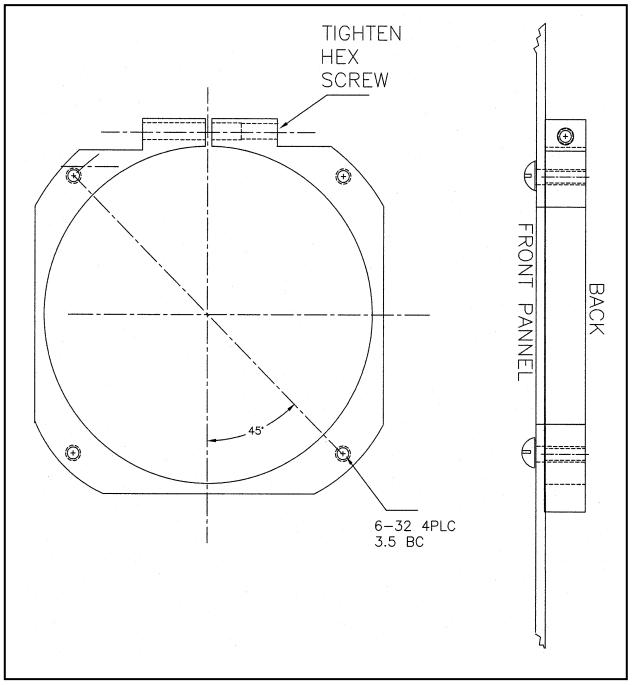

Mounting bracket for the EDM-900

EDM-900 Model: Mounts in a standard 3-1/8” instrument hole. First, place the mounting bracket on the instrument and tighten the clamp hex screw until you can just remove the instrument from the bracket. The Mounting bracket is then placed behind the instrument panel hole and screwed (6-32 x ½” screws) in place using the existing holes. Three screws should be used leaving one hole vacant on either side of the hex screw. Locate the hex screw in a location that you can easily get to from the rear of the panel. The body of the instrument is 3.0 inches in diameter and 2.0 inches deep less connectors.

5. *EDM Display Installation*

Choose the Proper Installation Location
The display is best located within the natural scan and easy reach of the pilot. The recommended mounting location is defined as the distance from the vertical centerline of the Primary Flight Instruments to the outer edge of the further most gauge displayed on the EDM.

HORIZONTAL ORIENTATION:
The EDM display may be mounted from the vertical centerline of the Primary Flight Instrument "T" to a maximum of 21" to the further most gauge of the EDM display and to the left of the centerline as much as needed.

VERTICAL ORIENTATION:
The EDM display is to be mounted within +/- 10" from the horizontal centerline of the Primary Flight Instrument "T". The installer should insure that the EDM display is not obstructed by either the glare shield or the control wheel.

The installing A&P and IA must insure that the installation location complies with the viewing angle requirements listed above.

8. *EDM-900/930 Key information installation*

Aircraft specific configuration information is loaded differently on both the EDM-900 and the EDM-930. The configuration data is the same for both instruments. The data for the EDM-900/930 is loaded via the mini USB port on the EDM-900 and a standard USB port for the EDM-930.

Be sure to verify that this matches your aircraft.

Note: If your EDM should ever have to be replaced with a different unit, the factory will reprogram it to match your configuration. You should always retain your fuel quantity calibration records, as these may need to be manually re-entered in a different or serviced unit.

9. *Routing the Wiring Harnesses*

Five connectors are protruding from the rear of the instrument. Connect the five wiring harnesses to the rear of the instrument and run the cables through the firewall into the engine compartment. Allow sufficient service loop to facilitate removal of the connectors for servicing. These wiring harnesses are labeled as follows:

Conn	Harness PN	
P1	790200	Power, Engine ground, MFD input, MFD output the following are optional and need to be added : Oil temperature, Induction temperature, Carburetor temperature, Outside air temperature, Turbine inlet temperature, Turbine inlet temperature 2,
P2	700700 700702	CHT, EGT 6 cylinder CHT, EGT 4 cylinder
P3	790420	RPM, MAP, Oil pressure
P4	700708	Serial data to GPS, Serial data from GPS, Fuel flow transducer
P5	790723	Fuel Pressure, Fuel Level (Resistive and Capacitive), Amps
RAD	790749	Category 5 jack and cable for RAD (Remote Alarm Display)

Route the wires from the connectors through the firewall using rubber grommets and flame retarding silicone. Use an existing hole if possible. All wires must be routed away from high temperature areas (exhaust stacks, turbochargers, etc.). Secure probe and sensor leads to a convenient location on the engine approximately 8 to 12 inches from the probe or sensor, being sure there is sufficient slack to absorb engine torque. It is essential in routing the probe wire that this wire not be allowed to touch metal parts of the air-frame or engine since abrasion will destroy this high temperature wire. Secure wires along the route to the indicator. Secure wire using original clamps, tape or tie wrap if possible.

Note: The probe wires must **not** be tied in with **ignition**, alternator or engine cabin heater ignition wires or transceiver coax cables because of potential induced interference with readings.

The temperature probe wiring harness is made of Chromel-Alumel alloy wires that **must not be substituted or extended with copper wire**. Temperature probe leads must be spliced with the same type of wire (typically Chromel-Alumel for JPI temp probes) using copper butt splices. The other signal and power wires are made from normal copper and must meet MIL-W-32759/16 or equivalent.

CAUTION: Be sure the installation does not result in interference with any aircraft control movements. When the installation is complete all wires should be secured using ties and carefully checked for interference, rubbing or chafing with flight controls and associated cables or any other moving parts.

10. *Pressurized Aircraft wire Routing*

Pressurized Aircraft have a factory installed pressure bulkhead pass thru boot or connector at the pressure vessel or firewall where all electrical wires from the engine pass through to the cockpit. If you can not find the opening follow the wires from the engine to the pressure vessel. If a boot with sealant is used, remove the sealant, pass the signal wires from the transducers mounted in the engine compartment to the display unit. Upon accomplishing this reseal the opening with factory recommended sealant.

An alternate method for a cannon connector is to use existing wires in the aircraft going thru the pressure bulkhead. The EDM-900/930 replaces the RPM, MAP, CHT, Oil Temperature, Oil Pressure Fuel Pressure, Fuel Flow and TIT gauges which have wires going thru the pressure bulkhead. Making a new hole in the pressure bulkhead is beyond the scope of this document and will require a DER or other FAA approval.

11. *Power Connection*

The EDM automatically adapts to either a 14 or 28-volt electrical system. **Master Bus power** wire to the EDM should be 20ga copper connected directly to the master solenoid located at the battery to avoid a line drop when cranking. A **5 amp circuit breaker** is required. **Connect the EDM ground wire to the engine block.** The instrument is designed to reset at less than 10vdc bus power, therefore **the instrument may reset on engine start** (typical for 14vdc systems). For lighting, no connection to the aircraft dimmer system is required because the instrument dims automatically with reductions in ambient light. Required power for 900 or 930 is 1.0 amp at 14vdc

12. *Probe Wiring*

When cutting the pair of leads to the proper length to connect to the probes, leave enough slack in the wiring so that probe may be interchanged to an adjacent cylinder if necessary for trouble-shooting and servicing. Thermocouple wire length is not critical and should be trimmed to any length as required for a clean installation.

The Temperature probe must be wired with the correct polarity. The temperature probe connects to its temperature indicator with yellow jacket Teflon Chromel-Alumel wire supplied. Strip the wires as shown below—observing color-coding.

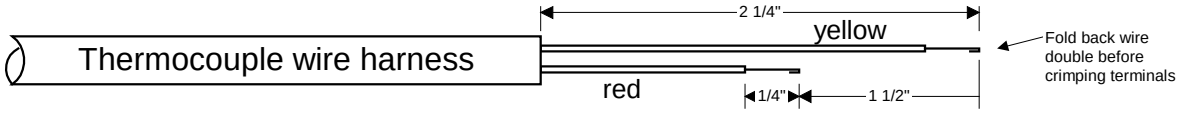

Terminate each wire with a crimp-on ring terminal, provided. The ring terminals may be crimped with an AMP part number 48518 crimp tool is recommended however, a “service-type” tool may also be used. Verify the quality of each crimp with a sharp tug on the wire. The terminal should be impossible to pull off when crimped correctly.

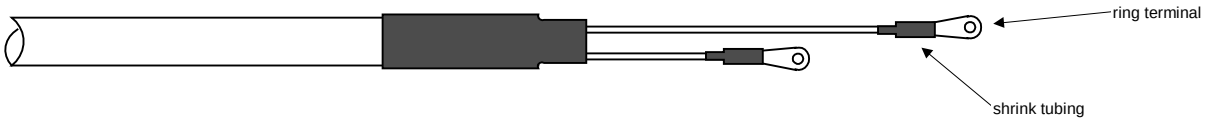

Place a ¼ x 4-inch sleeve over each pair of wires in the wiring. Connect the wire ring lug to the probe ring lug using the supplied number 4 screws and nuts, placing the star washer *between* the ring lugs, not against the nut.

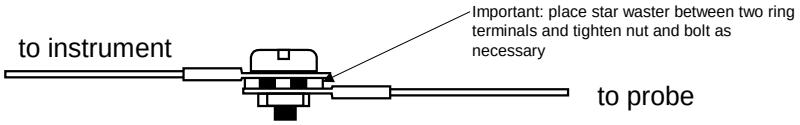

Slide the sleeve over the joint and secure with three tie-wraps.

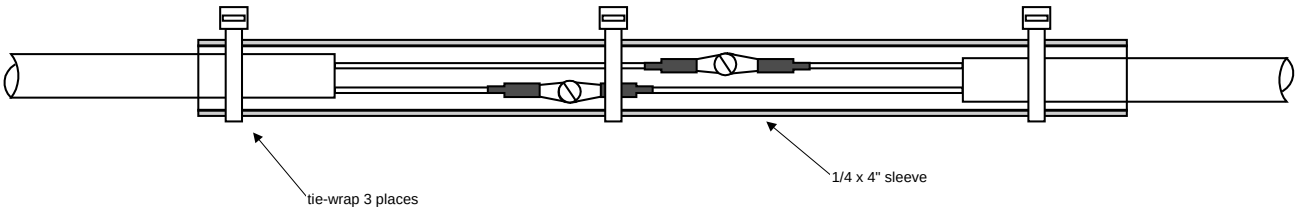

The most common installation problems are related to poor quality terminations.

12.1 *Wiring Markings*

The EDM-900/930 is supplied with special Teflon insulated Chromel-Alumel factory assembled wiring harness configured for the correct number of cylinders. The wire harness is marked E1= EGT-1, C1= CHT-1, etc.

NOTE: Unlike most other EGT & CHT installations **the probe wire length is not critical** and should be trimmed to any length as required for a clean installation. **Do not extend the thermocouple wire with copper wire.**

13. *Exhaust Gas Temperature Probe (EGT) Installation*

Use the J2 connector harness 700700 or 700702 labeled E1 through E4 or E6. Remove the existing EGT gauge and Probe. Replace with JPI probe M-111 in all exhaust stacks.

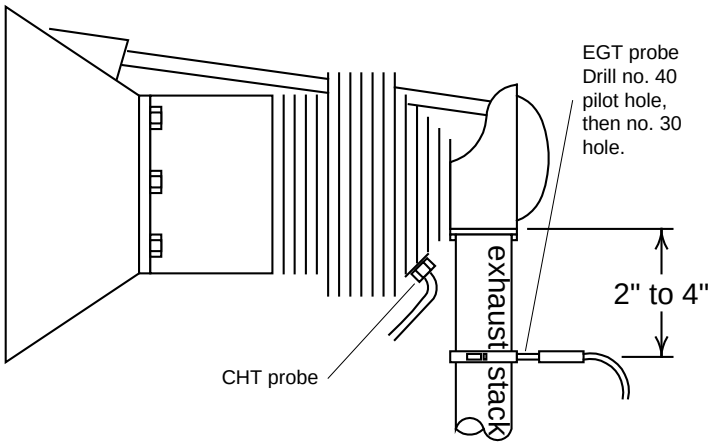

The Model M-111 Probe will fit any engines where the existing holes in the exhaust stack are 1/8" to 1/4" in diameter. If no hole exists, it will require the drilling of a 1/8" diameter hole and ream to fit. It is important that each probe be mounted the same distance from its exhaust stack flange. A nominal distance of 2 to 4 inches from the exhaust flange is recommended. **If the recommended distance is impractical** because of obstructions, slip joints or bends in the exhaust system then position the probes a uniform distance from the flange as space permits. **Do not mount probes in slip joints.** Be certain to locate all holes BEFORE drilling to ensure that nothing interferes with the probe, clamp, screw or wire. Careful matching of probe position will provide best temperature readings.

Insert the probe in the exhaust or previously drilled hole so that the tip of the probe is in the **center of the exhaust stream**. Tighten the stainless steel clamp to a torque of 45 in/Lbs. Cut off the excess strap close to the screw.

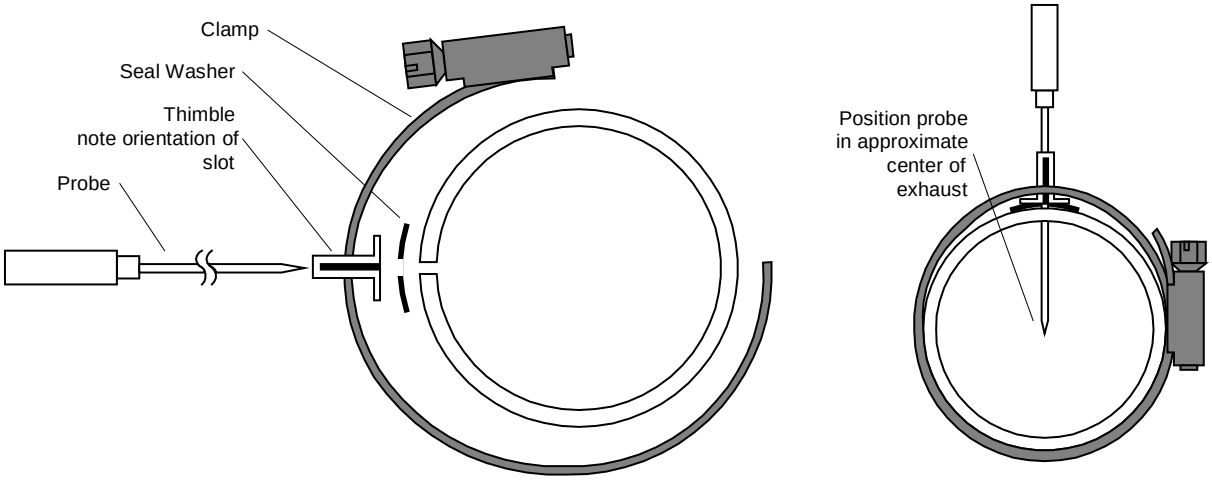

13.1 *Radial Engine EGT*

Radial engine exhaust, require a larger EGT clamp (supplied) to fit the 2.5 inch exhaust pipe. The EGT probe is installed in the same fashion as a Lycoming or Continental engine and should be placed between the exhaust pipe flange and the accumulator at a distance of 2 to 3 inches from the engine exhaust flange. Refer to the engine manufactures recommended location. Do not route the EGT/CHT harness in with the ignition harness. Do not extend the yellow thermocouple leads with copper wire.

13.2 *Turbine Inlet Temperature (TIT) Probe Installation (optional)*

Use the J1 connector harness 790200 and insert the yellow wire into the connector pin 16 and the red wire into pin 17. The standard TIT probe PN M111-T with a #48 clamp is placed in the exhaust stack accumulator to a maximum depth of 1/2 inch and approximately 4 inches from the turbine inlet if possible, on the waste-gate side of the turbine.

13.3 *TIT for second Turbine Inlet Temperature*

Use the J1 connector harness 790200 and insert the yellow wire into the connector pin 18 and the red wire into pin 19. The standard JPI TIT probe P/N M-111-T with a special clamp is placed in the exhaust stack accumulator to a **maximum** depth of 1/2 inch and approximately four inches from the Turbine inlet if possible, on the waste gate side of the turbine.

13.4 *Using the Factory original TIT Probe*

The factory installed TIT probe (K-calibration) is compatible with the JPI EDM-900/930 System. Connect the JPI wire marked TIT in parallel with the factory probe noting color polarity. Replacement probes should be purchased per part number from the aircraft manufacturer.

If you choose to use only the EDM-900/930 TIT display you may remove the factory installed TIT indicator and leave the TIT probe installed. Connect the JPI wire marked TIT directly to the probe noting color polarity. The TIT probe should now have only the JPI leads attached to it. No calibration of the EDM-900/930 is necessary.

14. *Cylinder Head Temperature (CHT) Probe Installation*

Use the J2 connector harness 700700 or 700702 labeled C1 through C4 or C6. The JPI probe is a bayonet probe P/N 5050 that has a captive 3/8-24 boss that is screwed into the head of each cylinder.

15. *Radial Engine CHT (spark plug gasket)*

Cylinder head temperatures are measured with a spark plug gasket type probe placed under the rear sparkplugs. The spark plug gasket probe, P/N M-113, replaces the standard copper spark plug gasket on one spark plug. The probe is placed on the rear plug for a cleaner installation and less chance of chaffing the thermocouple wiring. After many removals the probe may be annealed for re-use. Heat to 1100 ^{o}F and quench in water.

16. *Outside Air Temperature (OAT) Probe Installation*

Use the J1 connector harness 790200 labeled OAT. All wiring must be type K thermocouple wire. Do not splice ordinary copper wire in any temperature probe circuits.

Install the OAT probe, PN 400510 in the airframe manufacturer's recommended location. If this information is not available, place the OAT probe in clean airflow such as in a cabin air scoop or below the underside of the wing away from engine heat or exhaust. In this case it is recommended that the installation be done similar to the antenna installation instructions of AC 43.13-2b *Acceptable Methods, Techniques and Practices*.

The outside aluminum shield tube is used to both hold the probe in place and shield it from radiated heat from the sun. The OAT option is displayed as an independent digital temperature bar graph such as "75."

16.1 *Induction Air (IAT), Compressor Discharge Temperature (CDT) Probe Install (optional)*

Use the J1 connector harness 790200 and insert the yellow wire into the connector pin 3 and the red wire into pin 4. All wiring must be type K thermocouple wire. The Induction Air Temperature probe, (IAT), is installed just after the inter-cooler and the Compressor Discharge Temperature (CDT) just before the inter-cooler. The probe is the same as an EGT probe and installed similarly to an EGT probe. A large clamp is supplied to fit around the air duct leaving the inter-cooler. Alternately a 1/8 NPT fitting is available. IAT option is displayed as an independent digital temperature like "125 IAT". On non-turbo engines the IAT in reality is the Carburetor temperature and displayed as "34 CRB."

16.2 *Carburetor Probe Installation (optional)*

Use the J1 connector harness 790200 and insert the yellow wire into the connector pin 5 and the red wire into pin 6. All wiring must be type K thermocouple wire. Do not splice ordinary copper wire in any temperature probe circuits. Locate the access hole (1/4-24 thread) in the carburetor near the butterfly valve. Remove the screw plug

now in that hole and screw the CRB probe into the carburetor throat. No drilling or machining of the carburetor is necessary.

17. *Oil Temperature Probe Installation*

The sensor port is a standard 5/8-18 thread for both the Continental and Lycoming engines. Probe PN 400509 is a complete assembly using type K thermocouple wire (red/yellow). Connect the wire marked oil temperature observing polarity to pin 1 and 2 on 790200. Wire length has no effect on the readings. Oil temperature will be displayed as an independent temperature digital and bar-graph. Check with engine manufactures proper location for oil temperature. Check for oil leaks before first flight.

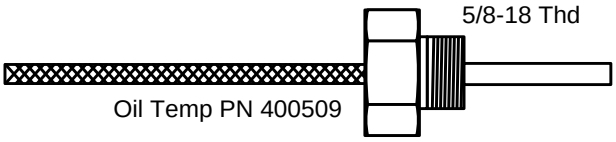

18. *Oil Pressure Sensor Installation*

Use the J3 connector harness 790420 labeled OIL-P for a VDO pressure sensor (shown in diagram below).

Mount Oil Pressure sensor using aluminum clamp MS21919-25 to FIREWALL, DO NOT MOUNT DIRECTLY TO ENGINE

Connect the pressure sender to the pressure line using a flexible hose (not supplied) and fitting as depicted in the drawing below. Connect the other end of the hose to the engine manufacturer's recommended location for engine oil pressure. There is no polarity on the oil pressure sensor wires.

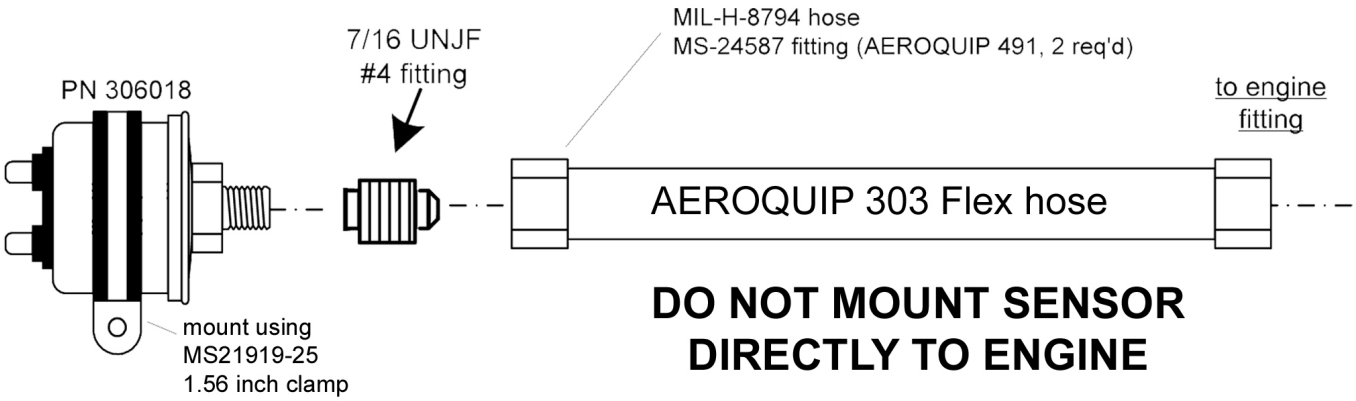

18.1 *Alternate method of installation keeping the original sensors in the aircraft operational*

The oil pressure sensor should tee off the oil pressure line feeding the original aircraft gauge or the oil pressure switch is removed and the sender is installed in that location.

19. Fuel Pressure Sensor Installation using combination sensor

Use the J5 connector harness 790723.

Mount the pressure sensor to the pressure line using a flexible hose and fittings (not supplied) as depicted in the drawing below. Use Aluminum Clamps MS21919WDG25, or WDG14 to mount the pressure sensor to engine mount structure or firewall. Do not mount the sensor's directly to the engine. Connect the other end of the hose to the existing pressure line. Later, you will connect the pressure sensor to the three pressure sensor wires through the supplied 3-pin connector. Sensor PN 159935 Normally Aspirated or Turbo-Normalized or PN 159939 OR 159938 for turbocharged. Fuel pressure sensors are only supplied if the POH requires it. If not in the POH Fuel pressure can be supplied at additional cost.

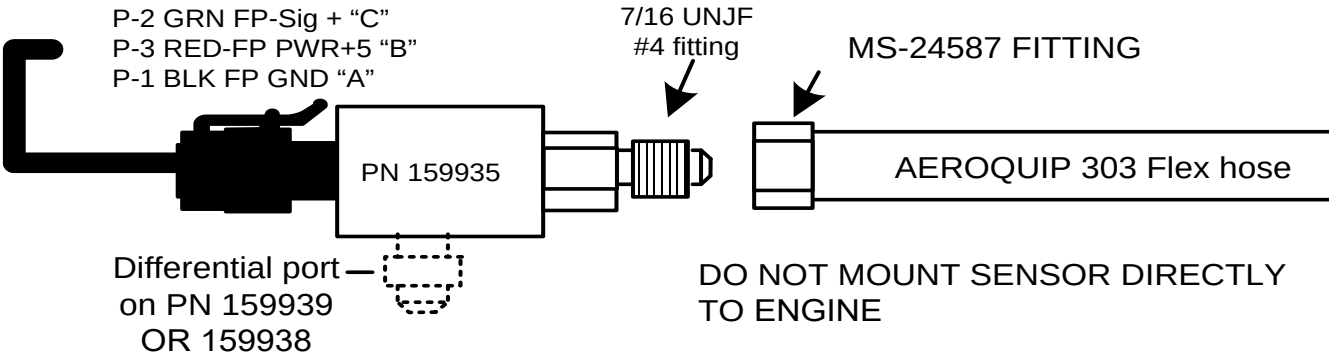

19.1 *Adding a non-primary gauge to the system*

Requirements: All EDM930 and EDM960 units manufactured after Sep 15, 2012 have the EDM Configuration Editor built into a separate utility memory area of the EDM.

To start the EDM Configuration Editor, hold the left two EDM buttons (STEP & LF) while powering up the EDM. This will start the EDM in a special AppLoader mode. Once the EDM Configuration Editor program is found, a button will be labeled CFG EDITOR**.** Press the button to run the EDM Configuration Editor program. Follow prompts and continue to the "Usage Agreement" page and press ACCEPT to continue.

Tap YES or NO for "SHOW CONFIGURATION TUTORIAL". Tap NEXT to skip "RESTORE FROM USB DRIVE?" Continue tapping NEXT until you see "EDIT GAUGES ?" Tap YES to begin the process. Using the NEXT button will scroll through the available non-primary gauges on the display. Once the gauge you wish to modify appears, tap MODIFY.

Tap NEXT until the title block "FUEL-P" or whatever non-primary gauge you selected is highlighted.
Tap MODIFY then YES when "Change Gauge Channel" appears.
Follow prompts to select a new gauge title.
Tap SAVE to save changes to the gauge, YES to confirm.
Tap DONE to exit gauge editing mode.

Tap NEXT repeatedly until "EDIT CHANNELS" is displayed.

Tap YES to edit channels. This will take you to the "EDM Probe & Sensor Channels" page. On this page you will see values for Primary gauges in RED which are not available for alteration. The values in WHITE can be selected or deselected to be displayed on the EDM. An "X" in the box selects the gauge to be displayed.

Tap STEP several times to select FUEL PRESS or desired gauge input channel.
Tap ENABLE key to enable the input.
Tap SAVE, then YES to save change to channels.

Tap STEP key repeatedly until prompted to exit configuration, EDM will restart with FP or desired gauge enabled.

20. Ammeter Shunt Installation

Use the J5 connector harness 790723 labeled AMP+ and AMP-. Connect the harness leads using ring terminals to the smaller terminal screws on the side of the shunt.

20.1 *Charge/Discharge configuration*

The shunt can be installed between the master contactor and the main bus in which case it will be in the ammeter configuration showing battery charge and discharge. Be sure that the *positive* side of the shunt is connected to the main bus in the *ammeter* configuration. The alarm will be triggered by a discharge condition.

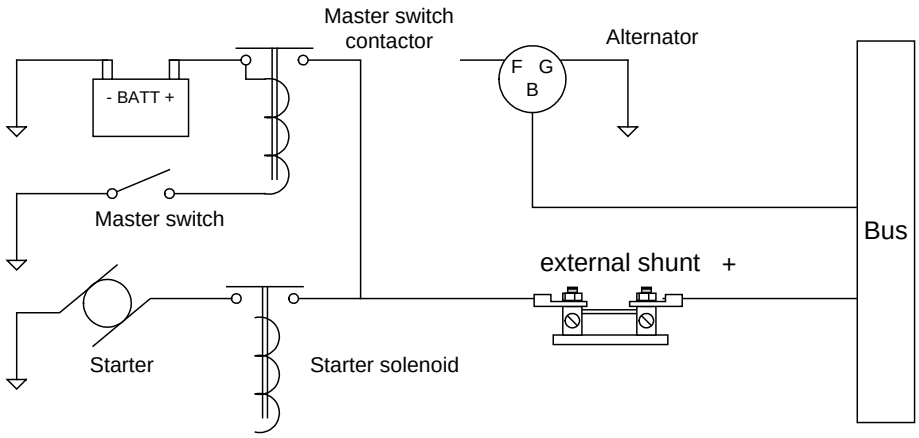

Ammeter Configuration

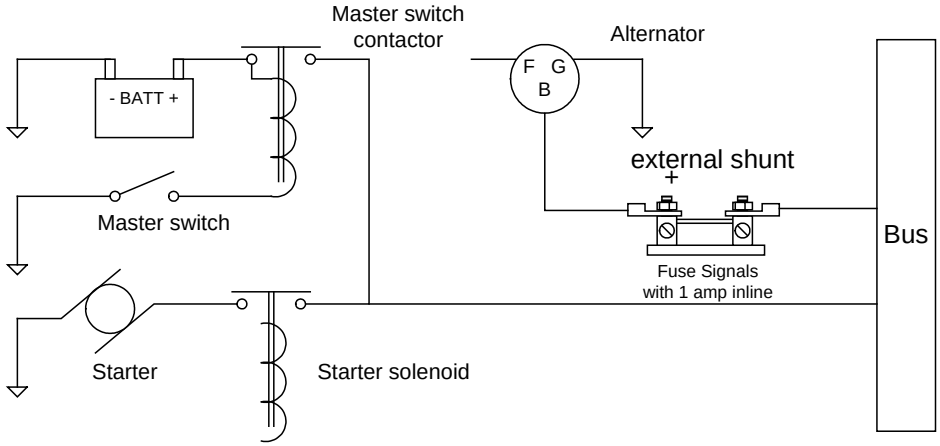

Load Meter Configuration

20.2 *Load Meter Configuration*

Alternatively the shunt can be installed between the alternator output and the main bus in which case it will be the load meter configuration showing alternator load (positive only). Be sure that the *negative* side of the shunt is connected to the main bus in the *load meter* configuration. There is no alarm.

21. *General Fuel Flow Transducer Installation*

Use the J4 connector harness 700708 labeled FFSIG (white), FFPWR (red), and FFGND (black). If no previous fuel flow transducer is installed, install transducer per **APPENDIX-A Report 503 FUEL FLOW TRANSDUCER INSTALLATION.**

The EDM-900/930 receives signal from any installed FloScan Transducer with the following FloScan P/N's embossed on to the top of the transducer. The K-Factor is marked on the side of the Transducer and on a white ticket. Wire per drawing 700744, Route the JPI wires along the existing wiring bundle lacing every foot.
The EDM is approved to work with the following Shadin equivalent PN.

FloScan PN	Shadin equivalent PN
201-A	NA
201-B	680501/680600
201-C	NA
231	680503

Before connecting any hoses to the transducer, thoroughly clean them and insure they are free of any loose material. **Never pass air pressure through the transducer or use Teflon tape/pipe cement; damage will occur.** Use only steel fittings supplied never use aluminum fittings on transducer (Additional fittings are available from JPI). Remove the transducer cap plugs only when ready to install the hoses. Note the direction of fuel flow marked on the transducer. Fuel must flow in this direction. Reverse flow installations will read ½ the required flow. Mount the transducer with the three wires pointing up. The K-factor is printed on the side of the transducer and on a tag. Write down the K-factor here for future reference _____.

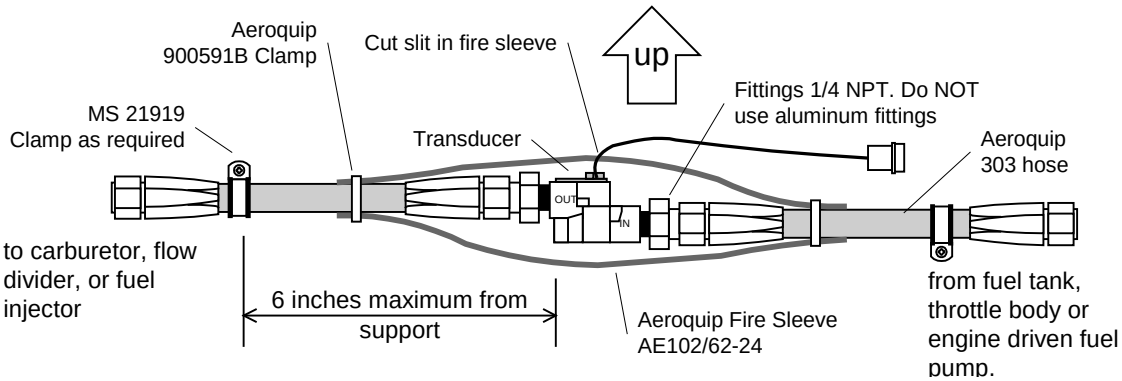

The EDM-900/930 fuel flow transducer receives signal from any installed 201 or 231 transducer with either of these part numbers embossed on to the top of the transducer**. For specific engine Installations see Appendix A Report 503**

22. *Fuel Level Sender Wiring Types*

The EDM has the capability to interface to the aircraft's fuel level system. It is also used to directly read the fuel senders for fuel calibration (**no other equipment is needed**). To implement the EDM fuel tank gauge functionality, the EDM is connected directly to the senders or in some cases to the aircraft's fuel sender signal conditioner (for example the Pennycap system typically found in Cessna). The EDM has the capability to process signals from three types of sender signals: Resistive output, Voltage output or Frequency output. JPI provides the appropriate interface hardware (the P5 harness and any associated signal conditioners) based on information you provided when your order was placed. Once installation is completed, you will perform a fuel level calibration. The EDM stores this calibration internally. **NOTE: The fuel quantity function will not be available until this calibration has been performed successfully**.

22.1 *Capacitive Sender Frequency Output Type Sender System*

Although frequency output type senders are uncommon in certified aircraft, JPI supports this interface. The P5 harness has two 3 conductor cables labeled LEFT TNK and RT TANK that are connected directly to the left and right senders. See the drawing below for basic connection information (only right tank shown for illustration purposes). Final route the LEFT TNK and RT TANK cables as necessary, then crimp the female contacts onto each cables GRN, BLK, RED wires, then insert them into the connector housing. Connect this to the sender's cable connector. Connect the white wire of the pod cable to the center insulated terminal on the sender, and the black wire to the terminal mounted on the metal body on the sender. See illustration on following page**.**

22.2 *Resistive Output Type Sender System (Float type, most common)*

Locate the wires that run between the existing ships fuel gauges and the senders and disconnect them. For tanks that have more than one sender, the wiring <u>between</u> the senders must be retained. Make sure the senders do not have voltage on them before connecting to the EDM. Connect the EDM to the senders using the wire pairs coming from the signal conditioner as shown below. Note that one pair is for MAIN and the other is for AUX. Connect the 'SIG' wire to the senders signal terminal (typically the center stud) and the 'GND' wire to the closest ground terminal near or on that sender. See illustration on following page.

Example harness arrangement for an aircraft with resistive output senders

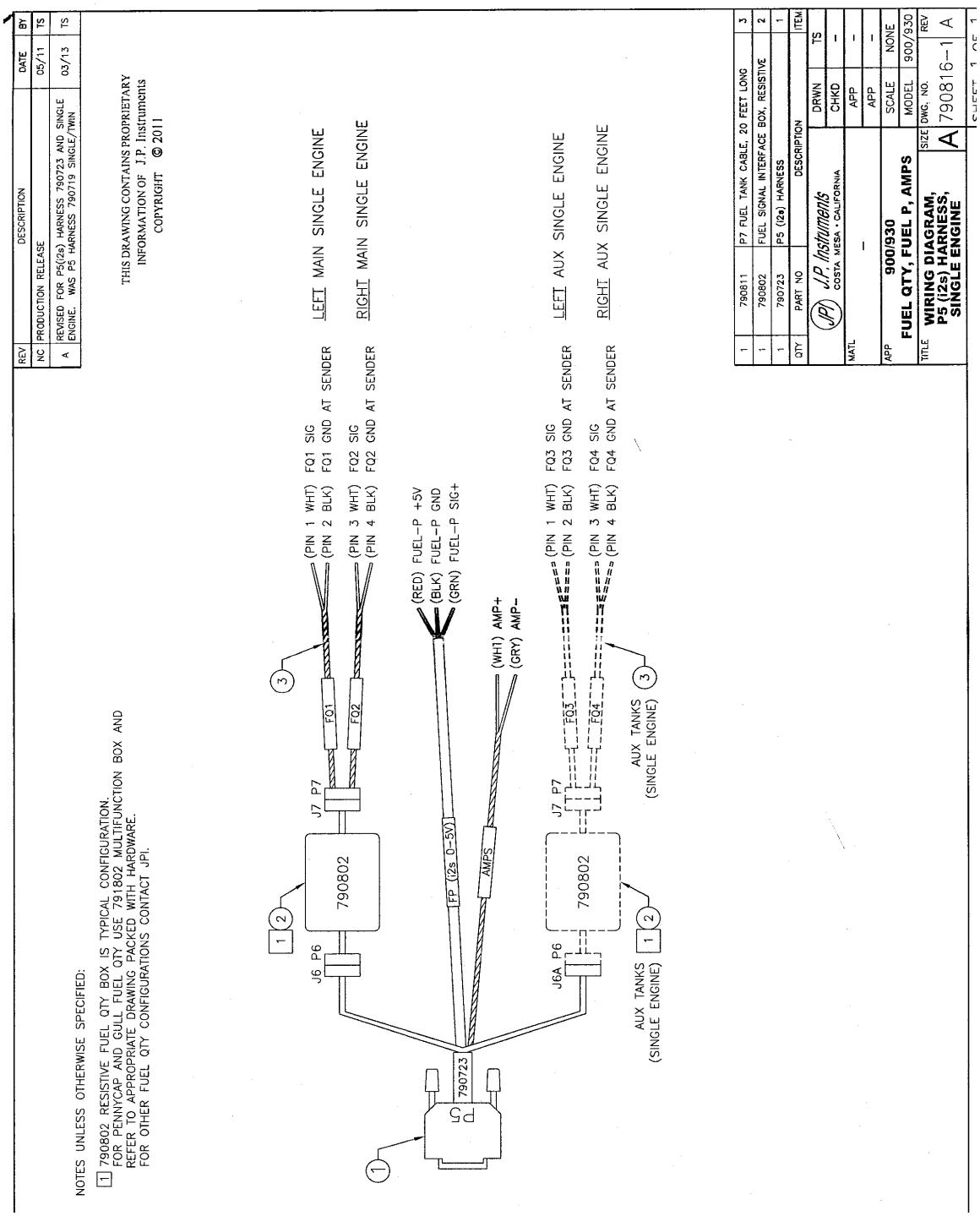

22.3 *Voltage Output Type Sender System*

Voltage output type systems usually have a convertor box. This is typical with the 'Pennycap' brand capacitive sender system. The Pennycap convertor box measures sender capacitance and converts it to a DC voltage output signal for the aircrafts fuel level gauge. In some cases the Pennycap convertor box alternately monitors two tanks per wing controlled by cockpit selector switch positions. This is typical for Cessna's having 4 selectable tanks. The EDM can interface to this system with the addition of the interface hardware (PN 791802). NOTE: This drawing is sent with the kit if applicable and is accurate for most models of the Pennycap system; however it is the installer's responsibility to verify proper connections to the Pennycap output signal.

22.4 *Fuel Tank Calibration Setting Fuel Calibration Points*

The EDM interfaces to various fuel level sensor types to facilitate direct reading of the fuel level in the aircraft fuel tanks. The EDM has a multi-point fuel calibration table that you must enter. This table contains calibration values (stored in non-volatile memory) used to translate sensor readings into the displayed fuel quantity values. The calibration information is collected and recorded on paper for later entry into the EDM. NOTE: Fuel quantity gauges will not be functional until the fuel calibration information has been entered into the EDM. You will use the EDM instrument itself as the measuring device to collect calibration data.

The following describes the basic procedures necessary for collection and entry of data into the fuel level calibration table. Note: Any changes to fuel table data will be temporary until you execute the **'SAVE'** function (available after last cell of the last tank table is entered).

Before beginning the fuel table entry/edit process, you must have properly installed and tested for correct functionality of the fuel sensors with the airplane in flight attitude.

WARNING:

- **Never add or remove fuel from the aircraft when the master switch is turned on.**
- **Fuel quantity gauge performance is affected by many factors, such as the integrity of the sensor performance, the accuracy of the calibration data you collected and entered and most importantly your validation that the EDM fuel quantity gauge is accurate and repeatable after installation and calibration. You should not use the fuel quantity gauge system for any flight related operations until this validation criteria has been met.**
- **JPI strongly recommends replacing the fuel quantity senders before calibration.**

DO NOT RELY SOLELY ON THE FUEL LEVEL DISPLAYED ON THE EDM-900/930 TO DETERMINE THE FUEL LEVELS IN THE AIRCRAFT. The use of the EDM-900/930 does not eliminate or reduce the necessity for the pilot to use good flight planning, preflight and in-flight techniques for managing fuel. It is important the pilot adopt the practices listed below. If you are not familiar with these techniques, contact the FAA to acquire proper training.

Getting Started…Collecting Fuel Level Calibration Data using the EDM as a meter.

1. With power off, hold in **Button 4 (Button 1 being far left)** and then turn on power. For each EDM monitored tank, create a **paper table** with the 5 calibration points and at what volume each will be. The zero gallon point reading is always taken with unusable fuel in the tank. Example of a completed table for **LEFT** tank:

	LEFT	
F	39.0 GAL	1907
¾	29.3 GAL	1431
½	19.5 GAL	1145
¼	9.8 GAL	971
E	0.0 GAL	685

2. This screen shown below provides real-time readings of all active fuel level sensors. Verify readings look normal. Reading are arbitrary whole numbers
3. Now add fuel as needed to match the required volume for a particular point. Cycle power between readings (hold in button 4), then take a reading and record it on paper adjacent to that point.
4. Repeat this process until all points have been recorded for each tank.

With AUX it would say LAUX and RAUX

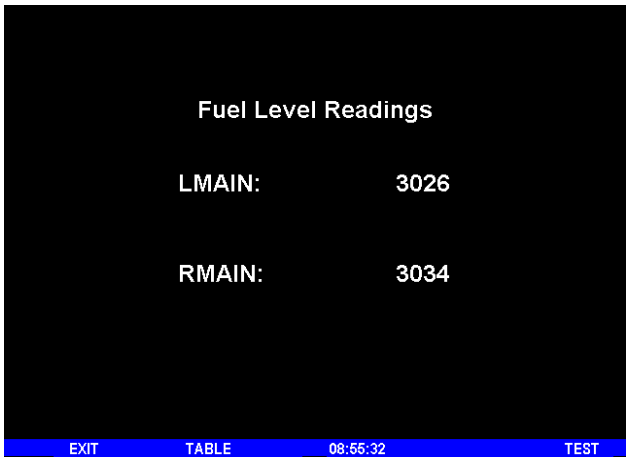

Actual Screen Shot

22.4.1 *After you have collected your data*

After you have collected your data…Entering / Editing Fuel Level Calibration Data

The Fuel Table Editor is a spreadsheet type format allowing you to easily see the volume and related calibration values side by side. You can easily navigate through the cells to enter values.

1. With power off, hold in **Button 3 (Button 1 being far left)** and then turn on power. Wait until you see '**Do you agree with the disclaimer?**'. Tap **YES** if you agree and wish to continue.

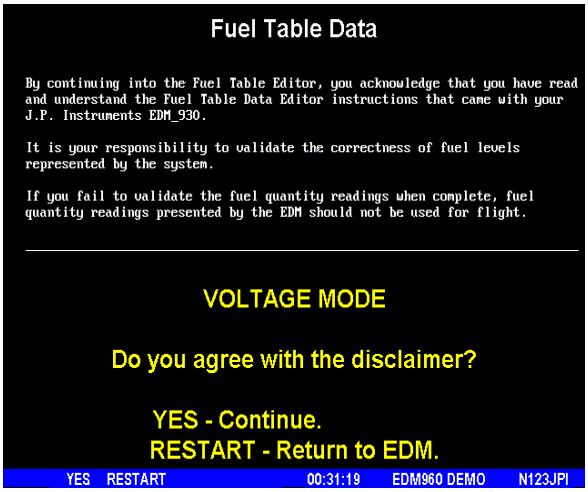

2. Tap **YES** when you see '**Do you have table data?**'.

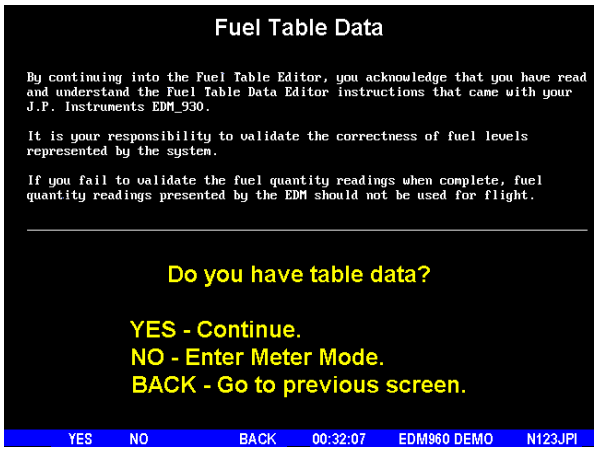

3. Tap **USER** when you see '**Do you want to restore user table?**' (Note: tapping FACTORY causes the fuel table stored on the Key Card to over-write any previous user entries in the fuel table. Use FACTORY if you want to start from the original factory default).

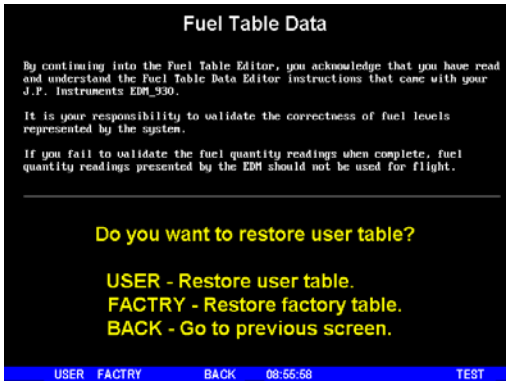

4. Tap **TANK** to select the next active tank and repeat previous step. Continue until all tanks 'points' have been set.

5. Tap **TABLE**. You see '**Fuel Table Data**' (White at top of screen) with a table. You may change any of the fuel levels in the left column except for empty. You will enter the readings taken previously on paper into the right column.

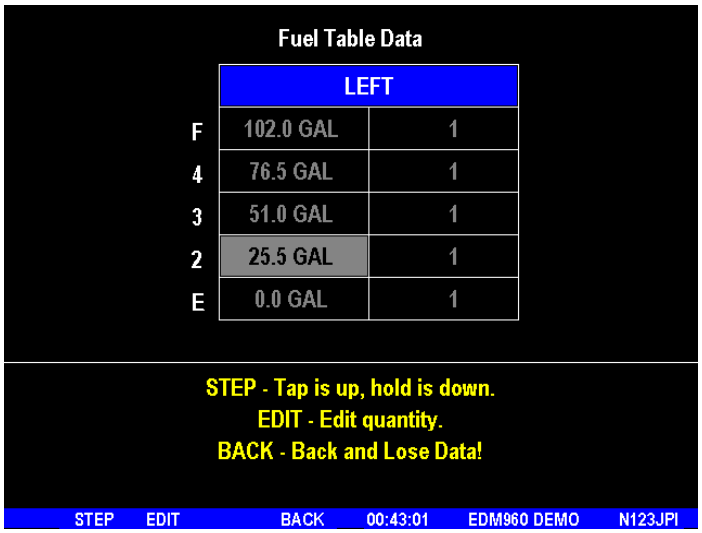

6. Tap/hold **STEP** to select the cell you want to edit. Tap **EDIT** to change the value. Tap or hold **Modify** to change digit. Tap digit to change another part of the number.

7. Tap **SAVE** to record it. Follow the on-screen menus to edit the value. Repeat previous step until all tanks data have been entered.

8. You see '**Save fuel tank data?**'. Answer **SAVE** to store all final data values or **CANCEL** to return to table editing. To complete the process, tap **SAVE** a second time.

23. Fuel Flow Totalizer, Refuel Question

The fuel flow totalizer can be set to a **different** value than the fuel level **tank size**. To reprogram the "Refuel setting for Main (total) and Auxiliary (total), enter the "Factory Program Mode" by holding buttons 1 and 2 in for a few seconds until the display reads "Program". Keep tapping **next** until you see "**END**". At this point hold in button 1 and 2 again until the display (5 sec.) changes and you see **FACTORY**. At this point you will see MAIN = XX, adjust with the **"Plus" and "Minus"** buttons. Tap **next** for AUX=XX and adjust. Tap button twice to finish and save.

24. *GPS Interface*

Use the J4 connector harness 700708 labeled RS232 OUT TO GPS (white) and RS232 IN FROM GPS (gray). Refer to the Manufactures GPS manual for the required pin connections on the GPS.

25. *Manifold Pressure (MAP) Sensor*

Use the J3 connector harness 790420 labeled MAP for the manifold sensor (shown in diagram below).

Connect the pressure sender to the pressure line using a flexible hose (not supplied) and fitting as depicted in the drawing below.

Connect the other end of the hose to the **factory manifold gauge.**

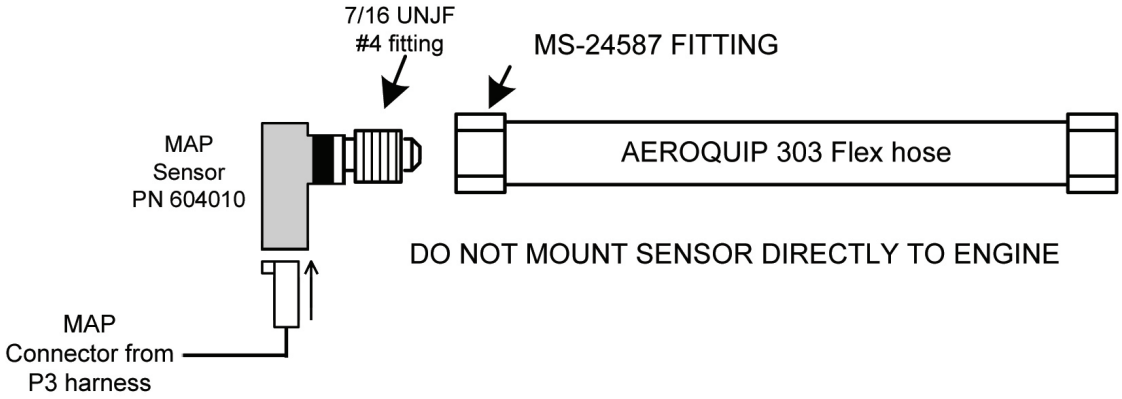

Manifold Pressure Calibration

The manifold pressure must be calibrated to the ambient air pressure. Enter the current ambient barometric pressure. The engine must *not* be running. This setting is *not* the same as the altimeter setting that you receive from ATIS or Unicom. It will vary with field elevation. Use the chart below to calculate the MP FACTOR. Multiply this MP FACTOR by the altimeter setting that you receive from ATIS or Unicom. For example if the field elevation is 1700 ft and the altimeter setting is 30.1, the MP FACTOR is 0.9400 from the table. Multiply 30.1 x 0.9400 to get the ambient MP of 28.29.

Field Elev.	MP FACTOR						
-500	1.0182	1200	0.9574	3100	0.8929	5000	0.8320
-400	1.0145	1300	0.9539	3200	0.8896	5100	0.8289
-300	1.0109	1400	0..4	3300	0.8863	5200	0.8258
-200	1.0073	1500	0.9469	3400	0.8830	5300	0.8227
-100	1.0036	1600	0.9435	3500	0.8798	5400	0.8196
0	1.0000	1700	0.9400	3600	0.8765	5500	0.8165
100	0.9964	1800	0.9366	3700	0.8733	5600	0.8135
200	0.9928	1900	0.9332	3800	0.8700	5700	0.8104
300	0.9892	2000	0.9298	3900	0.8668	5800	0.8074
400	0.9856	2100	0.9264	4000	0.8636	5900	0.8043
500	0.9821	2200	0.9230	4100	0.8604	6000	0.8013
600	0.9785	2300	0.9196	4200	0.8572	6100	0.7983
700	0.9750	2400	0.9162	4300	0.8540	6200	0.7953
800	0.9714	2500	0.9129	4400	0.8508	6300	0.7923
900	0.9679	2600	0.9095	4500	0.8477	6400	0.7893
1000	0.9644	2700	0.9062	4600	0.8445	6500	0.7863
1100	0.9609	2800	0.9028	4700	0.8414	6600	0.7833
		2900	0.8995	4800	0.8382	6700	0.7804
		3000	0.8962	4900	0.8351		

26. *RPM Sensor installation*

Use the J3 connector harness 790420 and connect the 3 leads using the supplied 3-pin connector and pins. There are four types of magnetos commonly in use. You must have the correct RPM sensor for the magneto installed in the aircraft. The following part numbers apply: Slick – pressurized 4000, -6000 series use JPI P/N 420809. For the Bendix pressurized -1200 series use P/N 420807. Dual magnetos use JPI PN 420808. For the pressurized Bendix -20, 200 series & S6LSC-25P and non-pressurized Slick 600 use JPI P/N 420806. Mount the sensor in the vent plug closest to the base of the magneto as shown in the appropriate diagram below. Note: this is eligible for installation on all 4 & 6 cylinder engines only.

.

Bendix Magnetos

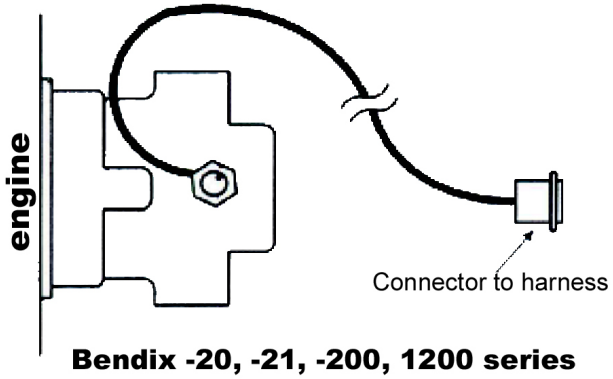

Bendix -20, -21, -200, 1200 series
non-pressurized
JPI 420815-2

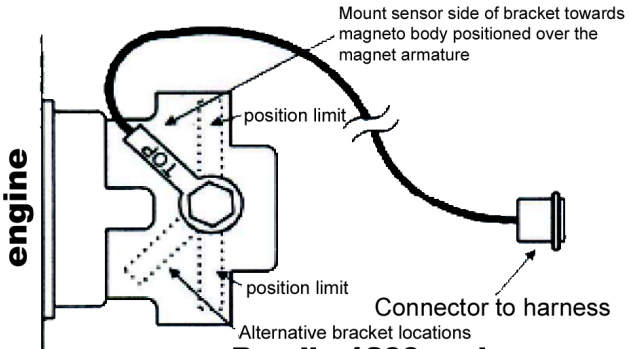

Bendix 1200 series
pressurized
JPI 420807

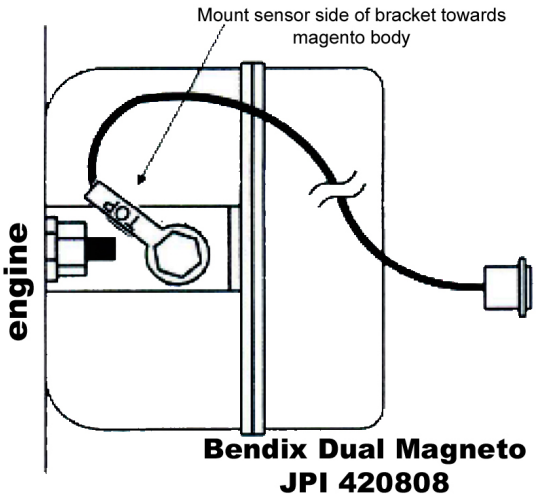

Bendix Dual Magneto
JPI 420808

Slick Magnetos

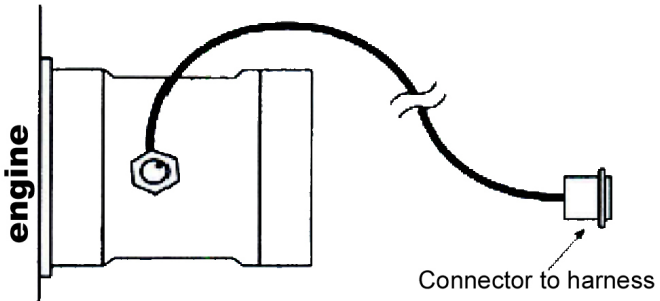

Slick 6000, 4000 series
non-pressurized
JPI 420815-1

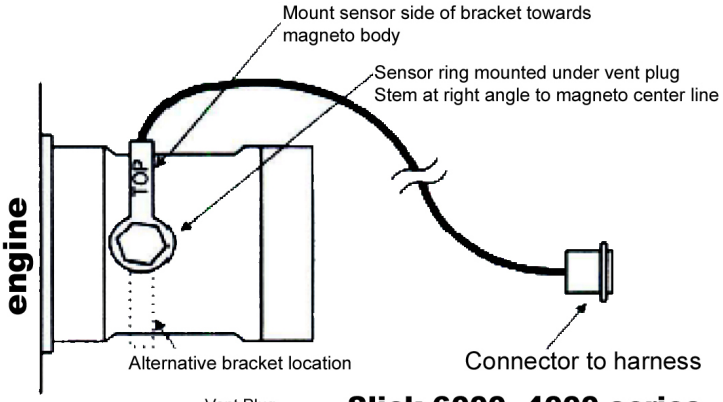

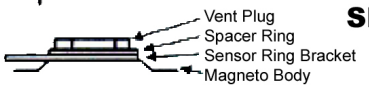

Slick 6000, 4000 series
pressurized
JPI 420809

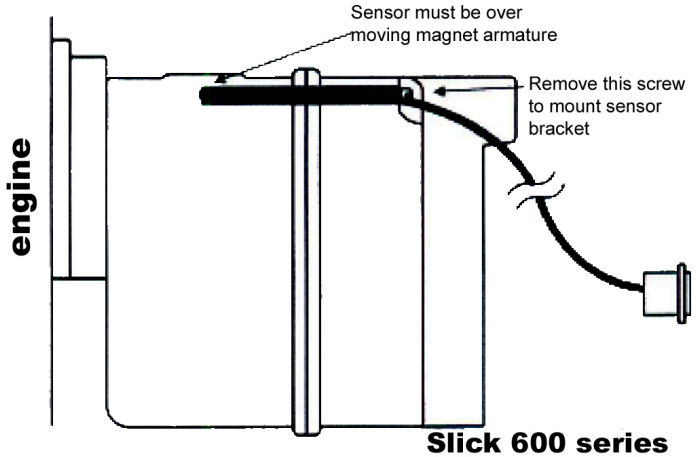

Slick 600 series
non-pressurized
JPI 420806

Also for Bendix Pressurized 20, 200, and S6LSC-25P

27. *EDM-900/930 Specifications and Limitations*

The following parameters must be customized for the aircraft into which the EDM-900/930 is installed.

Factory set limits or default values for EDM-900/930

1.	TIT 1650 F	TSO-C43
2.	CHT 450 F	TSO-C43
3.	Oil Temp Low 90 F	TSO-C43
4.	Oil Temp HI 230F	TSO-C43
5.	Oil Press low 15 psi	TSO-47
6.	Oil Press Hi 100 psi	TSO-47
7.	Vacuum 0- 15”hg	TSO-47
8.	RPM 2700 Limit and range	TSO-C49
9.	RPM set to cyl 6	TSO-C49
10.	Map 32 In hg HI	TSO-C45
11.	Map setting 29.90 In Hg	TSO-C45
12.	Fuel Pressure Hi 35 psi Injected	TSO-47
13.	Fuel Pressure Lo 15 psi Injected	TSO-47
14.	Fuel Pressure Hi 8 psi Carb	TSO-47
15.	Fuel Pressure Lo .5 psi Carb	TSO-47
16.	Fuel Flow 24 GPH	TSO-C44
17.	K-factor 29.99	
18.	Carburetor filter smoothing 1	
19.	Ammeter configuration (load or charge-discharge). Load	NON TSO
20.	HC-120 (% of HP)	NON TSO
21.	Fuel Level Resistive/Capacitive	TSO-55
22.	Low fuel 10 Gal	
23.	Low time 45 Min	
24.	Main tank 75 gallons	
25.	Aux tank 0	
26.	GPS set at GARMIN	
27.	Diff 500 degrees	TSO-C43
28.	CLD 60 degrees per minute	TSO-C43
29.	Amps limit 100 amps	NON TSO
30.	Record time, 6 sec intervals	NON TSO
31.	Hobbs on at 1000 RPM	NON TSO

On 14 vdc systems during start-up the EDM may reset it self. This is normal due to extremely low battery voltage. The conditions and test required for TSO approval of this article are minimum performance standards. It is the responsibility of those desiring to install this article either on or within a specific type or class of aircraft to determine that the aircraft installation conditions are within the TSO standards. The article may be installed only if installation of the article is approved by the Administrator. The functions of Volts, Amps, and Horse Power were tested to DO-160D and DO-178B, but not TSO’d since no TSO exist for these functions. Deviation granted for TSO-C49b to include digital display and sensor. All TSO required probes, transmitters and sensors also tested to DO-160D.

28. *EMI Radio Test and functional check:*

Even through the EDM-900/930 has been tested to DO-160E Section 20 (EMI) the installation itself could creates radio interference on specific frequencies. The following test is to insure that this does not exist.

EMI/RFI TESTS: perform tests, in accordance to the table below, to insure wire routing and connectivity has not compromised the signal integrity of the NAV/COM receivers. Power up the aircraft bus (or buses) in accordance with normal engine prestart procedures (see Aircraft Pilot Operating Handbook). Verify that the EDM-900/930 is operating normally and there are no bad probes or alarm messages. Set the frequency and audio panel to listen to that radio. Loud buzzing/humming is considered 'unusual noise' in the context of these tests also the OBS needle should not move. Should any EMI noise be found that is attributed to the EDM-900/930 system, it must be corrected by shielding and/or rerouting wiring to eliminate the noise. If unusual noise is heard, remove power from the EDM-900/930 system to check if it is the source of this noise. If the EDM-900/930 system is not the source of 'unusual noise' then mark the table with a 'PASS'.

Frequency	NAV/COM 1 (PASS/FAIL)	NAV/COM 2 (PASS/FAIL)	Comments
108.00			
112.00			
115.00			
117.00			
120.00			
121.00			
122.00			
123.00			
124.00			
125.00			
126.00			
127.00			
128.00			
129.00			
130.00			
132.00			

29. *Component Parts*

	Single engine				
	-4 Cyl	-6 Cyl	-7 Cyl	-8 Cyl	-9 Cyl
Display EDM-930 P/N 790000-C-(xxx)	1	1	1	1	1
Display EDM-900 P/N 790000-A-(xxx)	1	1	1	1	1
EGT probe KIT PN 1280	4	6	7	8	9
TIT probe with option KIT 1200	1	1	1	1	1
CHT probe KIT 1260	4	6	7	8	9
OAT probe with option KIT 1300	1	1	1	1	1
IAT probe with option KIT 1144	1	1	1	1	1
Carb temp probe KIT 1250 PN 500409	1	1	1	1	1
Oil Temp probe with option KIT 1255 PN 400509	1	1	1	1	1
Oil pressure sender KIT 1170 PN 306018	1	1	1	1	1
Fuel pressure sender KIT 1450 PN 159935	1	1	1	1	1
Fuel pressure differential sender Kit 1480 PN 159938	1	1	1	1	1
Ammeter shunt PN 159920	1	1	1	1	1
Fuel Flow transducer PN 700900-1 or -2	1	1	1	1	1
Fuel Level sender option	1	1	1	1	1
MAP KIT 1340 PN 604010	1	1	1	1	1
RPM one of P/N 420806 or 420809 Pressurized	1	1	1	1	1
RPM one of P/N 420815-1, -2 Non Pressurized	1	1	1	1	1
RAD P/N-790749 (for EDM-930)	1	1	1	1	1
RAL P/N-790547 (for EDM-900)	1	1	1	1	1

29.1 *Component Parts List for EGT (KIT 1280), TIT (KIT 1200) Probe*

1 Thermocouple type K probe PN M-111
1 Stainless Steel Clamp Thimble
1 Stainless Steel Exhaust Seal Washer
1 Stainless Steel Screw Type Clamp
2 Ring Terminals
2 Screws and nuts 6-32 X 1/4
1 Fiberglass tube 3/8” x 5”

29.2 *Component Parts list for CHT KIT 1260*

1 Bayonet Probe Thermocouple type K Spring loaded PN 5050
2 Ring Terminals
2 Screws and Nuts 6-32 X 1/4"
1 Fiberglass tube 3/8” x 5”

29.3 *Component Parts list for IAT (KIT 1300) probe*

1 Thermocouple type K probe PN M-111
1 Stainless Steel Clamp &Thimble
1 Stainless Steel Exhaust Seal Washer

29.4 *Component Parts list for OAT (KIT 1220) probe*

1 P/N 400510, OAT probe
2 Ring Terminals
2 Screws and Nuts 6-32 X1/4"
Fiberglass tube 3/8” x 5”

29.5 *Component Parts list for CARB (KIT 1190)* probe

1 P/N 400128, CARB probe
2 Ring Terminals
2 Screws and Nuts 6-32 X1/4"
1 Fiberglass tube 3/8” x 5”

29.6 ***Component Parts list for OIL Temperature probe (KIT 1250)***

1 P/N 400509 OIL probe
1 AN900-10 crush washer
2 Ring Terminals
2 Screws and Nuts 6-32 X 1/4"
1 Fiberglass tube 3/8" x 5"

29.7 ***Component Parts list for Oil Pressure sensor KIT 1170***

1 P/N 306018 Oil Pressure sensor
1 P/N 159964 Clamp, Loop Cushioned
2 Ring Terminals

29.8 Component Parts list for Kit 1490 or 1480 Differential Fuel Pressure (only if required by POH)

1 P/N 159939 or 159938 Fuel pressure sensor
1 P/N 159961 Clamp, Loop Cushioned
1 P/N 174204 Connector MS 3116F8-4S

29.9 ***Component Parts list for ampere shunt Kit 1300***

1 P/N 159920 100 amp shunt
2 Ring Terminals

29.10 ***Component Parts list for Fuel Flow Transducer***

1 fuel flow transducer, 201 or 231 PN 700900-1,-2
8 inches of 1.5" dia. fire sleeve
1 3-pin connector housing
3 female pins
2 AN816-4-4 fittings (Continental) or AN816-4-6 (Lycoming)

29.11 ***Component Parts list for MAP sensor KIT 1340***

1 P/N 604010 Manifold pressure sensor

29.12 ***Components Parts list for non pressurized RPM sensor P/N depends on Magneto make and model***

Bendix magneto -20, 1200……P/N 420815-2
Slick magneto 4000 or 6000……P/N 420815-1
Bendix dual ……P/N 420808

29.13 *Components Parts list for pressurized RPM sensor P/N depends on Magneto make and model*

Slick 6000……P/N 420809
Bendix magneto 20, slick 600……P/N 420806
Bendix Dual ……P/N 420808
Bendix 1200……P/N 420807

30. *Weight and Balance Data*

Indicator PN 790000(-A) EDM-900	2.0 Lbs
Indicator PN 790000(-C) EDM-930	3.0 Lbs
EGT / TIT / CDT / IAT / OAT probe	2.0 oz. each / 0.125 lbs
CHT / Oil Temperature probe	1.5 oz. each / 0.094 lbs
4/6 Cylinder Harness 8 ft.	14.0 oz. each / 0.88 lbs
RPM	1.5 oz each / .094 lbs
MAP	5.0 oz / 0.42 lbs
Fuel Pressure Sender	5.0 oz / 0.42 lbs
Oil Pressure Sender	5.0 oz / 0.42 lbs
Harness each	1.0 Lbs

31. *Pilot Programming*

To start the Pilot Program procedure, simultaneously hold the STEP and LF buttons for five seconds. You will see the word PROGRAM for two seconds and then the sequence shown in the chart below.

Tap the STEP button to advance to the next item in the list. Hold the STEP button to step back to the previous item. Tap the LF button to select alternate values of that item. Simultaneously hold both STEP and LF to exit.

STEP *advances next item*	LF *sequences through these values*	*Comments*
PROGRAM		*Stays on for two seconds.*
FUEL N	FILL? N	Tap LF to change fuel status. Exits program mode when done.
RATE 4	0 … 9	Index rate (pause time in seconds) in the Automatic Mode. 0 disables the Automatic Mode.
OAT F	OAT F ⇔ OAT C	To calibrate the OAT ±10°, hold both the STEP and LF buttons simultaneously for five seconds, which will proceed to the next step. Otherwise the next step will be skipped.
OAT+0	OAT-I0 … OAT+I0	This step will be normally be skipped. Adjust the indicated temperature up or down by up to 10°. For example, OAT+3 adjust the OAT 3° higher.
EGT I?N	EGT I?N ⇔ EGT I?Y	Y—Yes—sets the digital display to one-degree resolution; N—No—sets 10°. (10° resolution is easier to interpret the EGT's.)
HPC I25	70 HP HPC= I25	%HP display will change when HP constant is adjusted. Hold STEP and LF for 5 seconds until you see ADJUST to set the HP calibration. Tap STEP to continue to the next step. To adjust the MAP, hold both the STEP and LF buttons simultaneously for five seconds, which will proceed to the next step. Otherwise the next step will be skipped.
MAP 29.9	MAP 20 → 32	Adjust the MAP.
KF 29.90		Adjust the instrument's K-factor to match the fuel flow transducer K-factor.
TRIP? N	TRIP? N ⇔ TRIP? Y	N—No—Upon informing the EDM that you refueled the aircraft, reset total fuel used to 0. Y—Yes—accumulate total fuel used rather than reset to 0 at each refueling. See page
DATE AND TIME		Displays the Date and time
END? Y	END? Y	STEP exits the pilot programming mode. LF reenters pilot programming mode.

32. *Programming the HP Constant*

You must adjust the HP Constant once for your aircraft. You must perform this adjustment in the air while the aircraft is in flight between 5,000 and 8,000 feet MSL.

1. Enter the pilot program mode by simultaneously holding the STEP and LF buttons for five seconds.
2. Tap STEP repeatedly until you see—for example— HPC = I25. Then hold both the STEP and LF buttons display until you see ADJUST, followed by HPC= I25. The adjustment range for the HP Constant is 45 to 180.
3. Set the MP and RPM per your POH to 70 percent power. Let conditions stabilize.
4. Change the HP reading on the EDM-900 to 70 percent by adjusting the HP constant in the lower display by holding or tapping the LF button. Percent HP should be close to 100 percent during takeoff at sea level.
5. Tap the STEP button to proceed to the next step.

33. *Programming the MAP*

Sets the manifold pressure calibration.

You may need to correct the MAP based on the altimeter setting at a sea level airport (see page 27).

1. Enter the pilot program mode by simultaneously holding the Step and LF buttons for five seconds.
2. Tap Step/OK repeatedly until you see—for example – MAP adjustment 0.0 .
3. Then hold both the first two buttons until you see ADJUST, followed by MAP+0. The adjustment range for the MAP is ±3.0 in Hg. As you adjust the MAP up or down you will see a change in the MAP gage under RPM. When you see the correct setting stop.
4. Tap the Step/OK button to proceed to the next step or hold both buttons again to exit setup.

Do this one time and only if the MAP on your manifold pressure gauge doesn't match the MAP shown on the EDM-960 You must do this on the ground with the engine turned off.

.

34. *Selecting Fuel Pressure Type (EDM-900 only)*

To properly display Fuel Pressure values, the EDM must be told what type of Fuel Pressure sensor is connected to the EDM. This is normally set at the factory for new installations. To set or modify the type of Fuel Pressure sensor connected to the EDM, follow these steps:

1. Enter Pilot Program Mode by holding the STEP and LF buttons for 5 seconds
2. When the EDM enters Program Mode, tap the button labeled "**NEXT**" until **END?** Is displayed in the scanner message area.
3. Again hold the **STEP** and **LF** buttons until the EDM enters **Factory Program Mode.**
4. After "**Factory**" is displayed in the scanner message area, tap the **NEXT** button until **FUEL PRESSURE = is** displayed in the scanner message area.
5. Hold the **STEP** and **LF** buttons until the word **ADJUST** appears in the message area
6. Tap the **PLUS** or **MINUS** buttons to change the selected Fuel Pressure sensor type.
7. To save the selected value, hold the **STEP** and **LF** buttons until the word **SET** appears in the message area.
8. Tap the **STEP** button repeatedly until the message **END?** is displayed in the message area
9. Tap the button labeled **YES** to save changes and restart the EDM.

35. *Customizing Non-Primary Data (EDM900 only)*

You can customize – change or re-order non-primary data channels in the non-primary portion of the EDM display (non-primary values are displayed as text gauges without redline values – See Pilot's Guide for more information). Non-primary data channels are numbered from 1 up to 6, depending on your particular aircraft configuration and EDM installation. To customize the LCD layout of non-primary data, follow these steps:

1. Enter Pilot Program Mode by holding the STEP and LF buttons for 5 seconds
2. When the EDM enters Program Mode, tap the button labeled "**NEXT**" until **END?** Is displayed in the scanner message area.
3. Again hold the **STEP** and **LF** buttons until the EDM enters **Factory Program Mode.**
4. After "**Factory**" is displayed in the scanner message area, tap the **NEXT** button until **CUSTOMIZE DISPLAY?** is displayed in the scanner message area.
5. Hold the **STEP** and **LF** buttons until the word **ADJUST** appears in the message area
6. You will see a prompt like "**1=VOLTS**" (or similar). This describes the data channel to be displayed in the first non-primary data location.
7. Tap the "**CHANGE**" button to change to the next non-primary data channel. The new data channel selected will be displayed in the
8. Tap the "**NEXT**" button to select the next non-primary location (such as 2=AMPS).
9. When all changes have been made, hold the **STEP** and **LF** buttons until the word **SET** appears in the message area.
10. Tap the **STEP** button repeatedly until the message **END?** is displayed in the message area
11. Tap the button labeled **YES** to save changes and restart the EDM.

36. *K Factor*

The K factor is shown on the fuel flow transducer as a four-digit number, which is the number of pulses generated per gallon of fuel flow. Before installing the transducer, write down the K factor here _____. To enter the number, move the decimal point three places to the left. For example if the K factor on the fuel flow transducer is 29,123, enter 29.12 in the K factor parameter.

If the K factor is increased, the indicated fuel flow will decrease, and vice-versa. When the K factor is changed during a trip, calculations of fuel used, fuel remaining and time to empty are not retroactively recalculated.

37. *Fine tuning the K Factor*

The K factor shown on the fuel flow transducer does not take into account your aircraft's particular installation. Fuel hose diameters and lengths, elbows, fittings and routing can cause the true K factor to be different from that shown on the fuel flow transducer.

You must use the following procedure to fine tune the K factor.

1. Make at least three flights of about two to three hours each. Note the actual fuel used (as determined by topping the tanks) and the EDM-900/930 calculation of the fuel used for each flight USD.

Flight	*Fuel USED shown by EDM (total tank - REM)*	*Actual fuel used by topping tanks*
1		
2		
3		
Total	❶	❷

2. Total ❶ the EDM-900 calculated fuel used and ❷ the actual fuel used.
3. Record the current K factor here ❸_____ and in the table below.
4. Calculate the Adjustment ratio:

   Adjustment ratio = $\frac{(❶ \quad / ❷ \quad) - 1}{2}$

5. New K Factor = ❸ x (Adjustment ratio +1).

Record the values here:

Date	*❶EDM fuel used*	*❷actual fuel used*	*❸Current K factor*	*New K factor*	*Pilot's initials*

38. *Adjusting the K Factor*

This procedure is different than for setting other parameters.

1. If you haven't already done so, start the Pilot Program Mode by clearing all alarms by tapping step repeatedly, then simultaneously hold the STEP and LF buttons (for about five seconds), until you see the word PROGRAM, followed by 'FUEL ? N'.
2. Tap STEP repeatedly until you see K-FACTOR=29.90 (this value may be different on your unit).
3. Hold both the STEP and LF buttons simultaneously until a digit begins flashing. This indicates editing has been enabled.
4. Tap or hold the LF button to change the flashing digit to the desired value.
5. Tap or hold the STEP button to select the next digit to edit.
6. Repeat steps 4 and 5 until the displayed value is set to your desired value.
7. To save new value, hold STEP and LF buttons simultaneously (for about five seconds) until the K factor parameter exits.
8. Tap STEP repeatedly until you see END? Y, then Tap STEP once more to exit the Pilot Program Mode.

39. *Programming Accumulate Trip Total*

Accumulate—default is OFF: resets the fuel used to 0 every time you inform the EDM-900 that the aircraft was refueled. With accumulate ON fuel used will not be reset to 0 when you inform the EDM-900 that the aircraft was refueled.

Select "No" if you wish to display total fuel used since the last time you informed the EDM-900 that the aircraft was refueled. Select "Yes" to display total fuel used for an extended trip with multiple fuel stops. This selection affects only the USD measurement.

During normal operation, to reset the accumulated fuel used display at any time, tap STEP until you see USD. Hold both STEP and LF until the display shows .0 USD.

40. Trouble Shooting

Diagnostic Testing on Startup and During Flight

When your EDM is first turned on it tests internal components, calibration and integrity of the probes. During flight, probes are constantly checked for inconsistent or intermittent signals.

Problem	*Situation*	*Correction*
A MISSING COLUMN IN THE DISPLAY UPON START UP	Diagnostic routine has found an open line or probe with no connection.	Replace the EGT or CHT probe shown in the error message
A MISSING COLUMN IN THE DISPLAY DURING FLIGHT	A reading that is jumping around or incorrect The probe is removed from the line up	Replace the EGT or CHT probe shown in the error message on the next flight.
DISPLAY FREEZES OR MAY BE INCORRECT	A power transient could cause the processors to malfunction	Recycle the power to the EDM
LEANFIND FINDS A “PEAK” TOO SOON	Failure to pre-lean before performing LeanFind or stopping while leaning. Leaning too slowly	Continue to lean without stopping Lean more rapidly
PEAK NOT FOUND DURING LEANFIND	Lean Find not activated or stopping while leaning	Lean at the speed of approximately 10°F per second
OFF-SCALE EGT COLUMNS, TOO HIGH OR LOW	Off-scale EGT column readings. EDM in the Normalize view (blue EGT scales).	Return to Standard mode by holding the LF button.
FIRST CYLINDER TO PEAK IS NOT THE HOTTEST	The first to cylinder peak is not necessarily the hottest	This is normal.
EGTS RISE DURING SINGLE MAGNETO CHECK	Incomplete combustion persisting longer	This is normal.
EGTS NOT UNIFORM DURING LOW POWER OPERATION	Fuel and air distribution is not optimal at low power settings	This is normal.
0.0 GPH	Zero’s indicate Fuel flow is too low to register	This is normal.
--- GPH	Dashes indicate No fuel flow transducer signals	Have the mechanic verify if it is the sensor or wiring.
--- H.M	Dashes indicate No fuel flow transducer signals	No GPS signal, check the wiring
OPEN PRB	Open probe.	Wiring to probe is open circuit. Check wiring and crimps. Swap probes to troubleshoot.
BAD-PRB	Bad probe.	Erratic reading. May be poor electrical connection. Swap probes to troubleshoot.
RED ‘X’ DRAWN THROUGH A SINGLE GAUGE	Measurement out of range.	Have the mechanic verify if it is the engine or the sensor. Replace as necessary.

RED 'X' DRAWN THROUGH ALL GAUGES FOR AN ENGINE	DAU failure or DAU communications error.	Check power to DAU and wiring harness connections.
CAL ERR	Calibration error.	Return unit to factory.
DSP XXX	Internal communication error.	Return unit to factory.
COMM ERR	Internal communication error.	Return unit to factory.
NO I 5 MV	Calibration error.	Return unit to factory.
NO 50MV	Calibration error.	Return unit to factory.
NO 2.5V	Calibration error.	Return unit to factory.
WARNCAL, WARNCFG	Transient warning messages.	Return unit to factory.
HOBSERR	The time of the most recent flight may not be reflected in the HOBBS meter.	Return unit to factory.
HOBSBAD	The HOBBS data has been corrupted.	Return unit to factory.
HANGCFG, HANGCAL	Internal system errors.	Return unit to factory.

41. GPS Interface Diagnostics

Problem	***Situation***	***Correction***
Measurements 'xxx REQ', 'XXX RES' AND 'XXX MPG' are all missing from the scan.	No communications from GPS receiver to EDM.	No connection or aircraft GPS is off.
NO - COM message and 'xxx REQ', 'XXX RES' AND 'XXX MPG' are all missing from the scan.	Communications are received by EDM and the Auto-Protocol setup is in process.	Verify correct output format setup in GPS receiver; check GPS connections.
NO - SIG message and 'xxx REQ', 'XXX RES' AND 'XXX MPG' are all missing from the scan.	GPS receiver has insufficient signal for valid data.	Check GPS signal
NO - WPT message and 'xxx REQ', 'XXX RES' are all missing from the scan.	No waypoints are programmed into the aircraft GPS receiver.	Program way points

42. Connector Pin Assignments on EDM, J1 through J5

Rear view of EDM 930 Showing Connector Locations

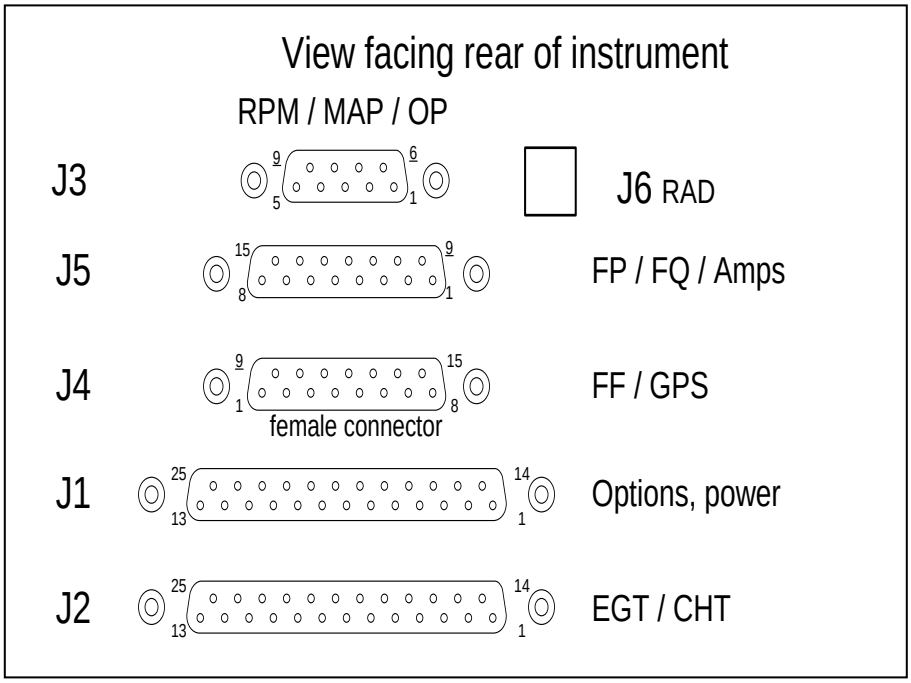

43. Connector Pin Assignments on EDM, J1 through J5

Rear view of EDM 900 Showing Connector Locations

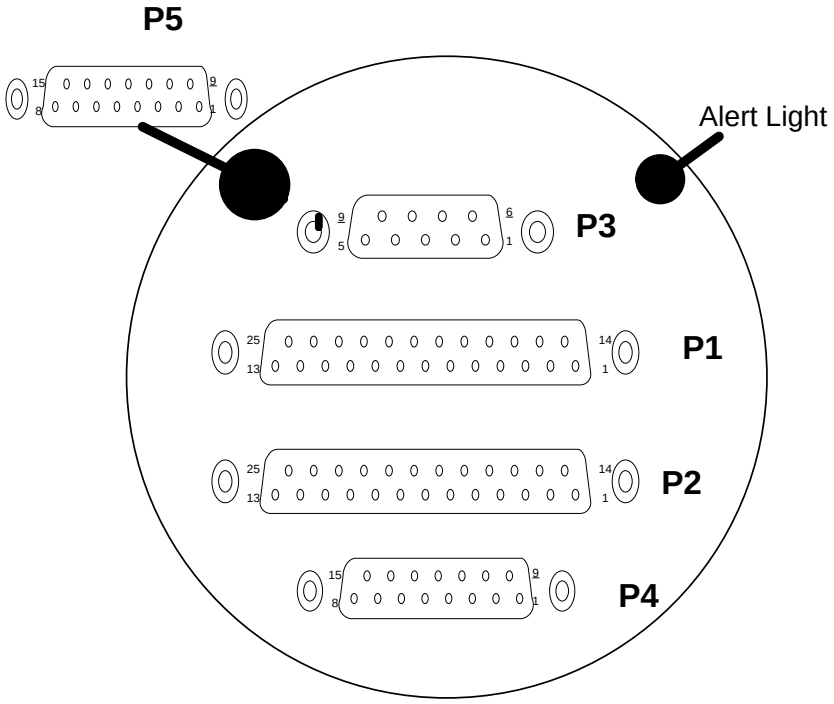

J1 For **4** and **6** cylinder installations

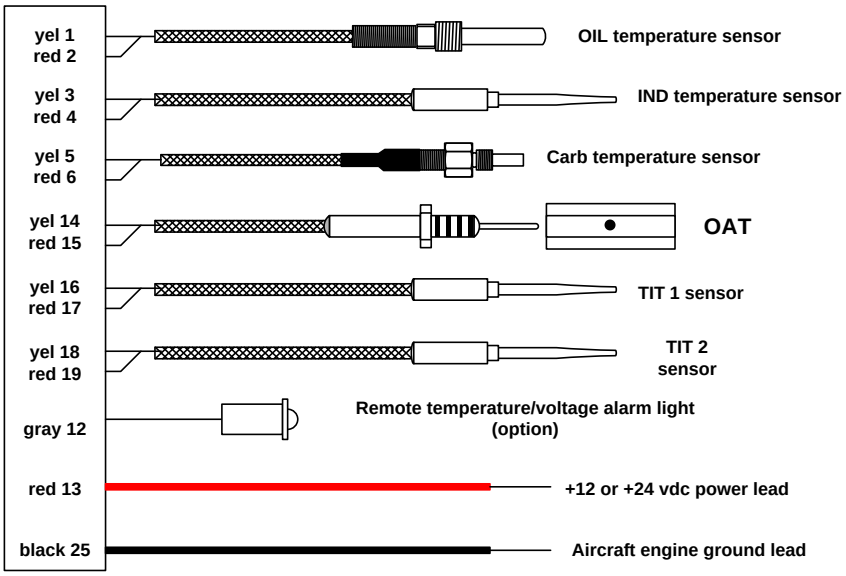

J1 FOR **7, 8,** and **9** cylinder installations

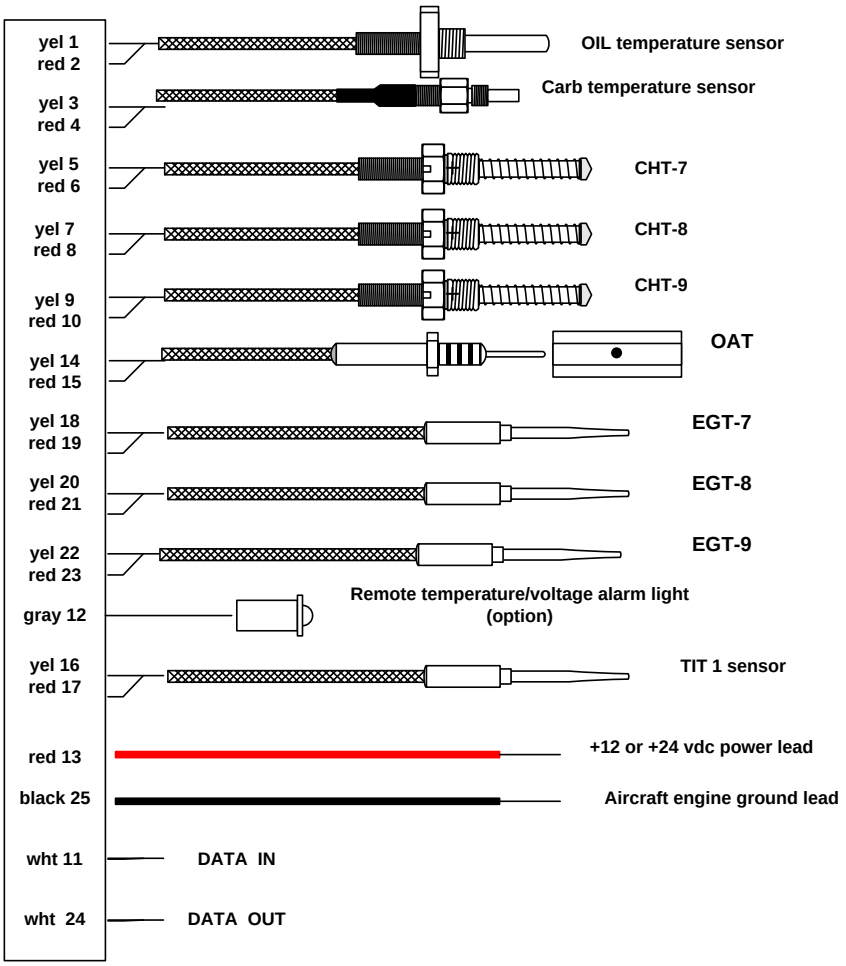

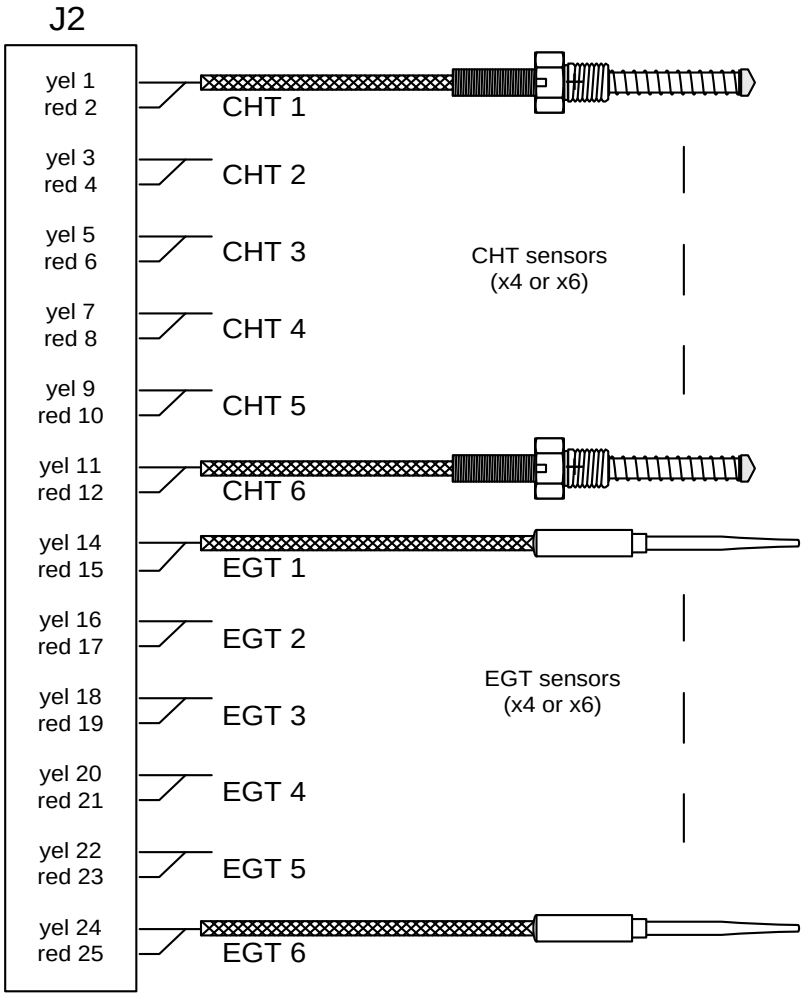
J2
yel 1
red 2
CHT 1
yel 3
red 4
CHT 2
yel 5
red 6
CHT 3
CHT sensors
(x4 or x6)
yel 7
red 8
CHT 4
yel 9
red 10
CHT 5
yel 11
red 12
CHT 6
yel 14
red 15
EGT 1
yel 16
red 17
EGT 2
EGT sensors
(x4 or x6)
yel 18
red 19
EGT 3
yel 20
red 21
EGT 4
yel 22
red 23
EGT 5
yel 24
red 25
EGT 6

44. J3 RPM, MP, Oil-P

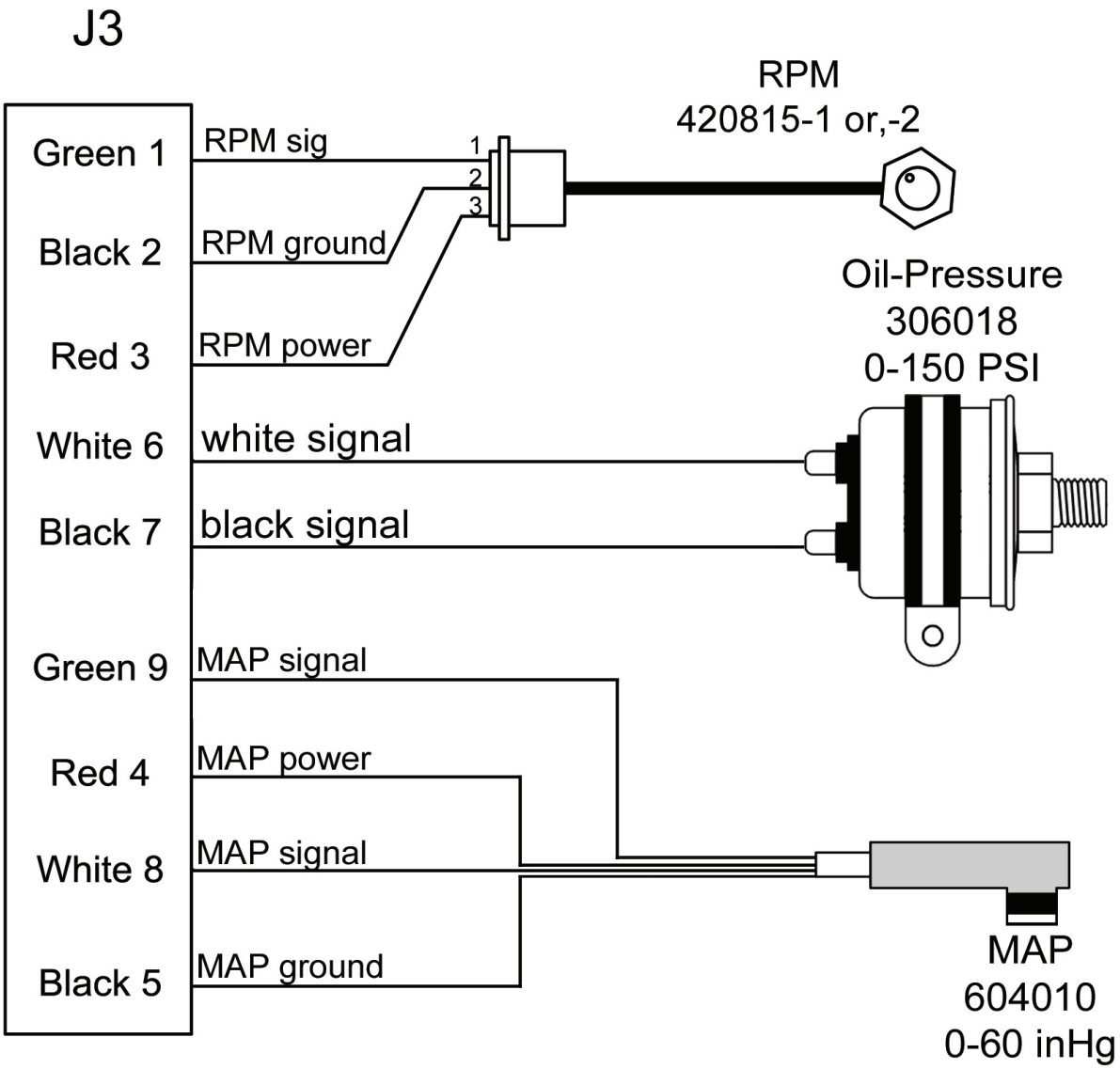

J4 (FF, GPS, AMP 2)

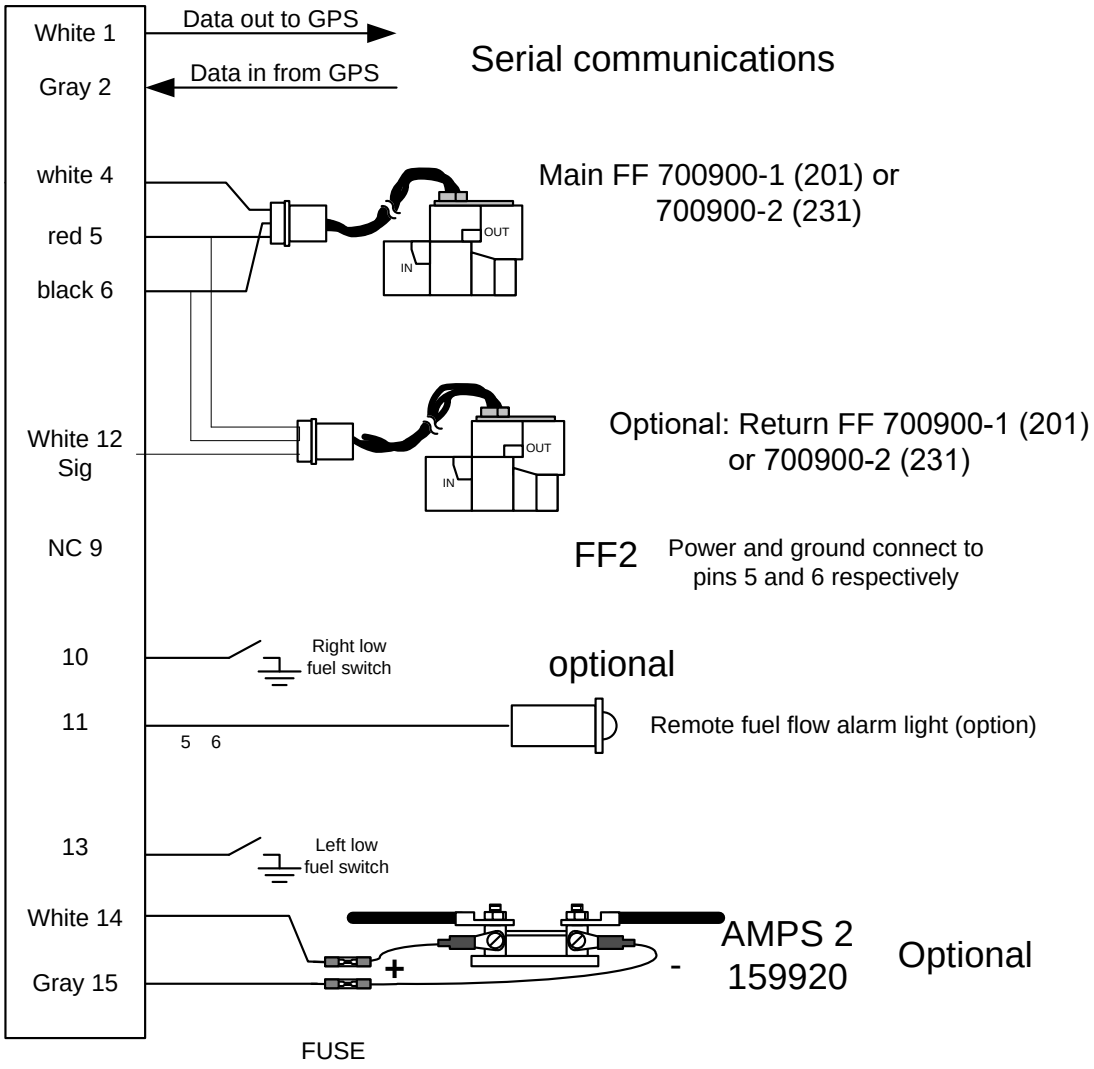

44.1 J5 PN 790723 (fuel tanks, fuel press, amps)

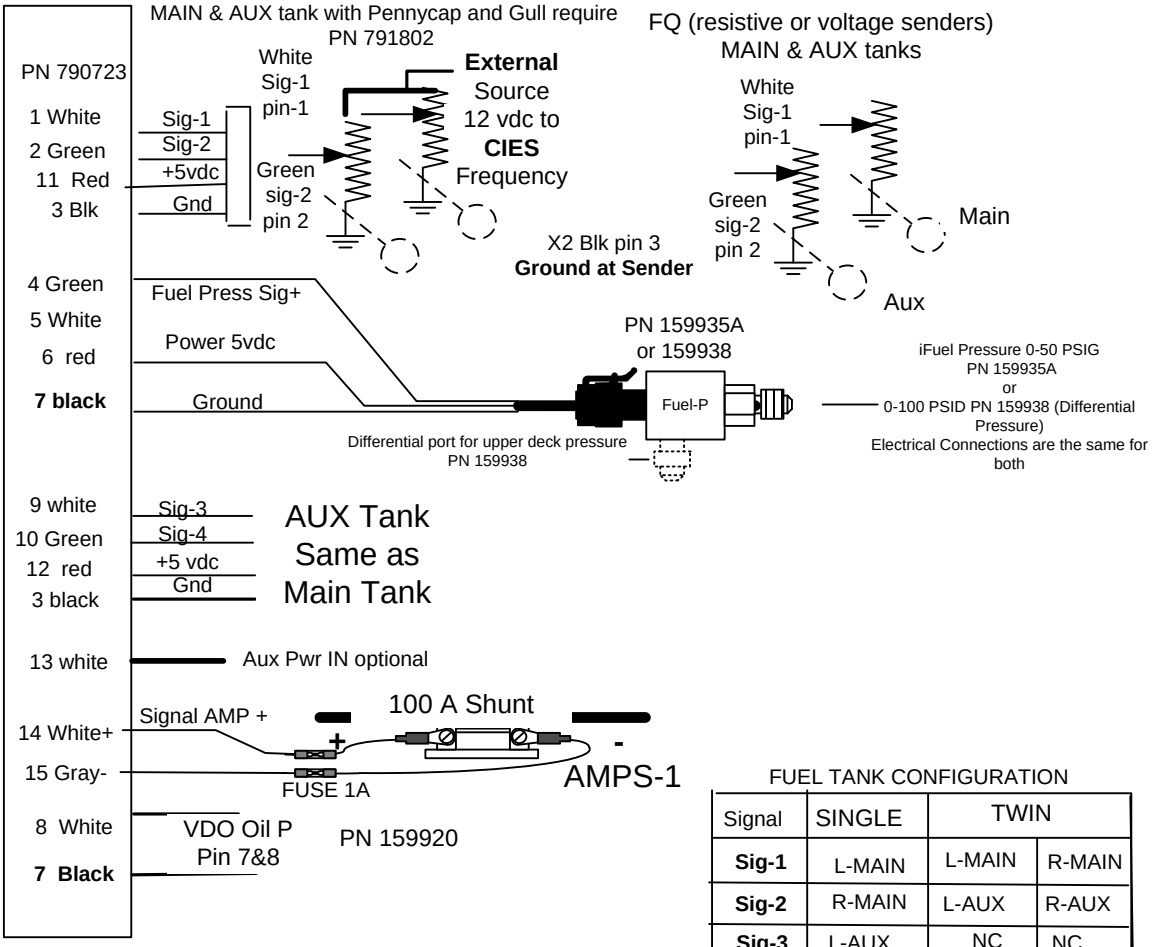

FUEL TANK CONFIGURATION

Signal	SINGLE	TWIN	
Sig-1	L-MAIN	L-MAIN	R-MAIN
Sig-2	R-MAIN	L-AUX	R-AUX
Sig-3	L-AUX	NC	NC
Sig-4	R-AUX	NC	NC

J-5 Harness with capacitance fuel pressure sender.

REV	DESCRIPTION	DATE	BY
NC	PRODUCTION RELEASE	12/11	TS
A	ADDED CIES TYPE SENDERS AND EDM-950	02/16	LE

WIRING DIAGRAM, P6 HARNESS, 790827

FOR DIRECT TYPE FUEL QTY SENDERS

(VOLTAGE 0-5 V, RESISTIVE 0-300 OHM, OR CIES FREQUENCY TYPE)

EDM-900/930, SINGLE ENGINE

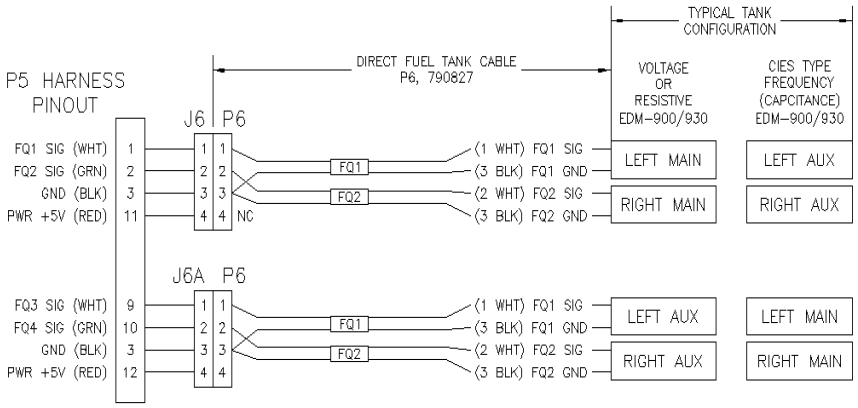

NOTES UNLESS OTHERWISE SPECIFIED:

1. FUEL SENDER GROUND WIRE ALONG WITH EDM GROUND WIRE MUST BE TERMINATED ON AIRFRAME GROUND AT SENDER.

EDM-950, TWIN ENGINE

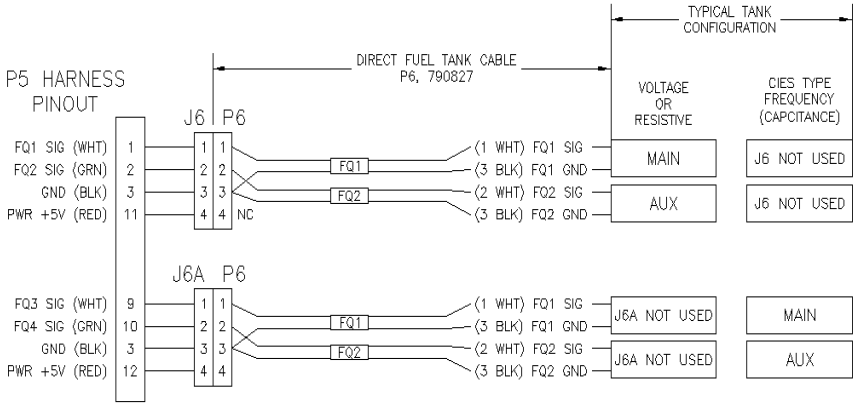

QTY	PART NO	DESCRIPTION	ITEM
–	–	–	–

J.P. Instruments
COSTA MESA • CALIFORNIA

MATL –

APP DIRECT TYPE FUEL QTY (0-5 VOLTS, 0-300 OHMS, OR CIES TYPE)

TITLE **WIRING DIAGRAM, P6 HARNESS, 790827 DIRECT FUEL TANK CABLE**

DRWN	TS
CHKD	LE
APP	–
APP	–
SCALE	NONE
MODEL	900'S

SIZE A DWG. NO. 790837 REV A

SHEET 1 OF 1

General Wiring Diagram

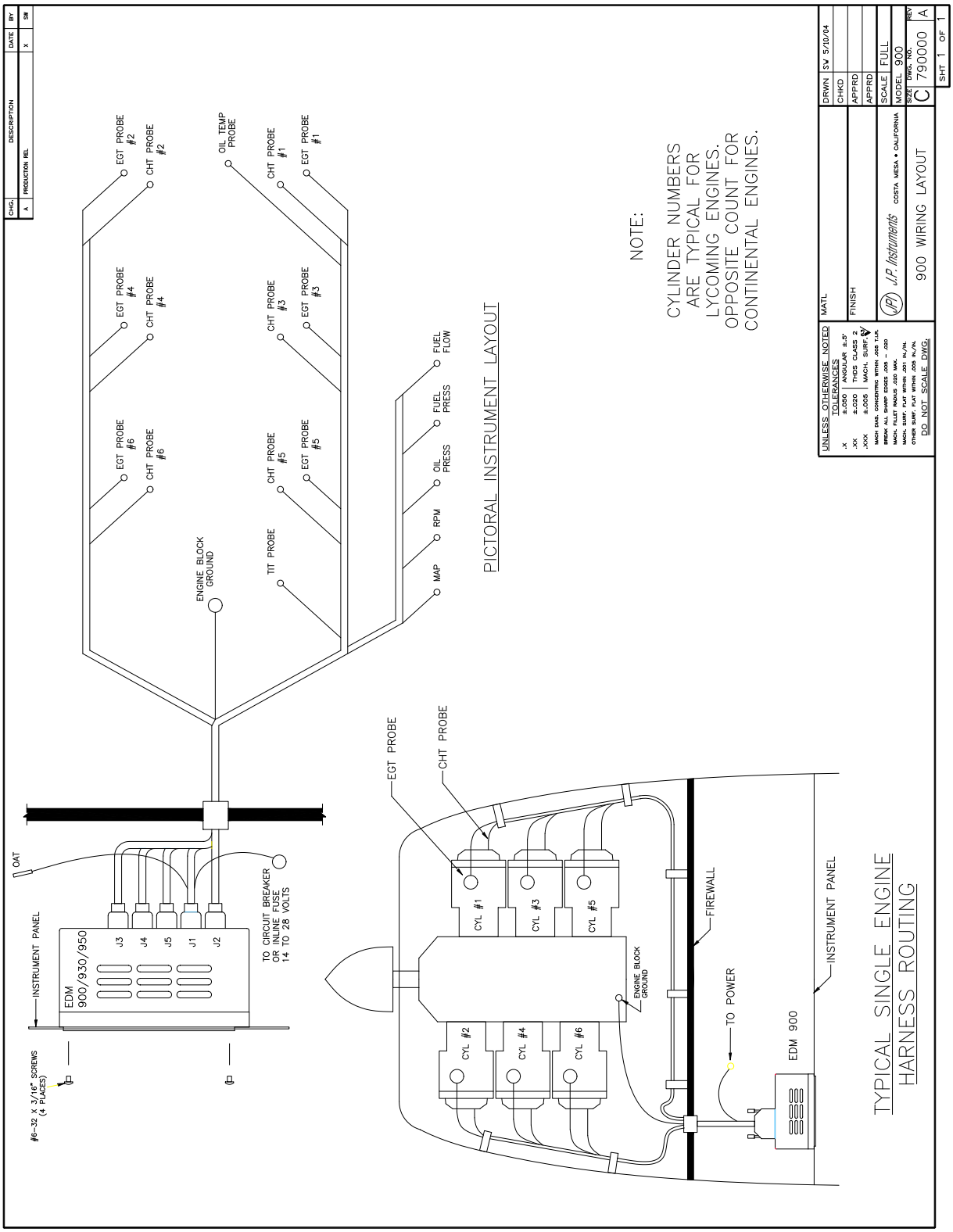

45. *Appendix A* Connector Pin Assignments on EDM, J1-J2 Only with ARINC 429

J1 - DB25M	Production Version	
1	Oil Temp Y	
2	Oil Temp R	
3	IND Temp Sensor Y	
4	IND Temp Sensor R	
5	Ground Oil Pr/Hydr Pr	
6	Oil Pr +input 0-5V	
7	Oil/Hydr Pr +5V power	
8	Torque +5V power	
9	Torque +input 0-5V	
10	Torque Ground	
11	AMPS #1+	connected to generator shunt
12	AMPS #2+	connected to battery shunt
13	14-28V Pwr (BAT1)	
14	OAT Y	
15	OAT R	
16	ITT Y	
17	ITT R	
18	Emerg Hyd Pr +in 0-5V	Kg (5V) / lb (0V) Select
19	Main Hyd Pr +in 0-5V	Day (5V) / Night (0V) Select
20	Fuel Pr +5V power	
21	Fuel Pr +input 0-5V	
22	Fuel Pr Gnd	
23	AMPS #1 -	connected to generator shunt
24	AMPS #2 -	connected to battery shunt
25	Power Ground	

J2 DB25F	Production Version	
1	ARINC IN #1A	Not used
2	ARINC IN #1B	Not used
3	GPS RS232 Data In	
4	GPS RS232 Data Out	
5	Fuel Flow Signal	
6	Fuel Flow +12V pwr	
7	Fuel Flow Ground	
8	FQ #1 0-5V	
9	FQ #2 0-5V	
10	Fuel Temp RTD -	Ground
11	Fuel Temp RTD +	
12	nCAL	Do Not Connect
13	14-28V Aux Pwr (BAT2)	
14	ARINC OUT #1A	
15	ARINC OUT #1B	
16	Annunciator #1	Ground = on
17	Annunciator #2	
18	Annunciator #3	
19	Annunciator #4	
20	FQ #3 0-5V	
21	FQ #4 0-5V	
22	N2, Np	
23	N1, N2 Gnd	
24	N1, Ng	
25	Power Ground	

Refer to:

J. P. Instruments EDM 900/930 Instructions for Continued Airworthiness,

Supplement No: 905-01, Revision E dated 5-24-2014 or later FAA approved revision.
Check the JPI website, jpinstruments.com for the latest revision to the ICA