TABLE OF CONTENTS

1. Revisions 2
2. Read This First 2
3. Instrument Marking 5
4. Primary TSO Label 5
5. Operation and Abbreviations 6
6. Dimming 7
7. Locating and Installing the Indicator and Remote Alarm Display, RAD 8
8. EDM-960 Display Installation 9
9. EDM-960 Key Card Installation 10
10. EDM-960 in aircraft with wing-mounted engines 11
11. EDM-960 in aircraft with centerline thrust engines 12
12. Wiring harness for 950 13
13. Wiring harness for Display 13
14. Pressurized Aircraft wire Routing 14
15. Power Connection 14
16. Probe Wiring 14
17. Wiring Markings 15
18. Exhaust Gas Temperature Probe (EGT) Installation 15
19. Turbine Inlet Temperature (TIT) Probe Installation (optional) 16
20. Cylinder Head Temperature (CHT) Probe Installation 16
21. Outside Air Temperature (OAT) Probe Installation 17
22. Compressor Discharge Temp Probe Installation (optional) 17
23. Carburetor Probe Installation (optional) 17
24. Oil Temperature Probe Installation 17
25. Oil Pressure Sensor Installation 18
26. Ammeter Shunt Installation 19
27. General Fuel Flow Transducer Installation 20
28. Fuel Level Interface Installation 21
28.3 Fuel Tank Calibration 23
29. Capturing the sender reading at each calibration point: 24
30. GPS Interface 26
31. Manifold Pressure (MAP) Sensor 27
32. RPM Sensor installation 27
33. EDM-960 system Specifications and Limitations 29
34. EMI Radio Test: 30
35. Component Parts List 31
36. Weight and Balance Data 33
37. Pilot Programming 33
38. Programming the K factor 36
39. Trouble Shooting 37
40. Connector Pin Assignments EDM-950, J1 through J5 38
41. P8 Harness Display PN 790807 45
42. Interconnection between Display, DAU's and GPS 48
43. Instructions for Continued Airworthiness (ICA) 486

The Owner of the EDM-960 must keep this manual

J.P. INSTRUMENTS
PO BOX 7033
HUNTINGTON BEACH CA

1. Revisions

REV	Description	Date	Approval
A	New diagrams added	2-10-2006	jfp
B	Added Revision box, new pictures of 900 and 930, page 6. Abbreviations page 4.	9-28-2011	jfp
C	Added new Pictures of fuel pressure and oil pressure transducers	12-12-12	jfp
D	Added new ICA and Pressure bulkhead paragraph	2-21-2014	jfp
E	Revised fuel flow calculation, fuel qty. points, new rpm sensor diagram	6-3-2016	jfp
F	Improved wire List	2-12-2020	jfp
G	Updated Pictures, added note for CIES senders	7-10-2021	jfp
H	Revised Oil Pressure sensor, MAP sensor and P3 harness	11-06-2025	jfp

2. Read This First

- The following notes apply to a new installation. **Read this section before proceeding**.
- If you are installing **CIES** sender for fuel level DO NOT get the power to drive the **CIES** senders from the EDM but install an independent power source with it's own CB.
- The JPI warranty found in the back of the pilots guide clearly states that JPI will replace defective parts under warranty, **but does NOT cover labor to remove or install any parts**.
- The most common cause of probe problems is poor terminal crimps. Crimp ring terminals with AMP tool or equivalent. **Fold back the wire double before crimping terminals.**
- This installation will require some parts unique to your aircraft that are not supplied with the kit, (including but not limited to tie-wraps, hoses and fittings). Acquire all the necessary parts prior to beginning the installation.
- Do not use aluminum fittings or Teflon tape or pipe sealant with the FXT-201 or FXT-231 fuel flow transducer.
- Write down the K-factor engraved on the side of the fuel flow transducer here _____. Once the transducer is installed and covered with the fire sleeve, you will not be able to access this K factor.
- Determine the locations of all holes before drilling to ensure that nothing interferes with the probe, clamp, clamp screw or wire.
- Provide service loops at the instrument so that it can be moved for maintenance or troubleshooting.
- Thermocouple wire length is not critical. Trim to required length, allowing for service loops at the engine so that probes can be swapped with probes on adjacent cylinders for troubleshooting purposes.
- Dress all wires away from high temperature components such as exhaust stacks.
- Never splice thermocouple wire using copper wire. Use only K-type thermocouple wire. Solder using zinc chloride flux such as Nokorode brand – rosin flux alone won't work.
- Observe correct polarity on all probe wires. Connect like colors together (red to red, yellow to yellow).
- **The DAU EDM-950 must be grounded at the engine**, not at the avionics ground.
- Record the installation of the EDM-960 on a FAA form 337. Make an entry in the aircraft logbook.

Do not install a non-certified EDM-960 in a certified aircraft. A certified EDM-960 lists see AML
.
If the EDM-960 is configured to monitor the aircrafts fuel tanks, the EDM-960 must be calibrated to the aircraft fuel system and the EDM-960's accuracy must be verified before flying the aircraft.

Before allowing the aircraft to be flown, verify the instrument markings displayed on the EDM-960 screens are accurate with the aircraft's POH for every function displayed on the EDM-960.

The use of the EDM-960 requires recurring training for any pilot who will be flying the aircraft in which it is installed. Recurring training should include reading the EDM-960 Installation Manual and seeking a flight instructor for proper interpretation of information being displayed to the pilot.

Fuel Level Accuracy Limitations:

1. Angle of Attack - The EDM-960 must be calibrated with the aircraft in a cruise angle of attack. If the aircraft is in an angle of attack other than cruise, the EDM-960 may display inaccurate fuel levels (depending on the mounting location and type of sensor used). If your aircraft does not sit at a cruise angle of attack when on the ground, it may not display accurate fuel levels. Test your aircraft at different angles of attack to see the effects on the EDM-960 fuel level readings.

2. Full Fuel Readings - As a tank is filled the fuel sensor may not be able to detect the fuel entering the upper corners of the fuel tank. If this is the case with your sensor, the EDM-960 will display lower fuel levels than the actual fuel in the tanks when the tanks are full. When the fuel level drops to a point where the fuel sensor starts to detect a change, the displayed fuel level should be accurate. Check the accuracy of your system by comparing the displayed fuel levels on the EDM-960 to the fuel levels listed in the flight manual at each fill up.

3. Low Fuel Readings - Do not rely on the EDM-960 to determine the fuel level in the tank for an indicated tank level below 1/8. You should always fly the aircraft in such a manner as to maintain at least the FAA minimum fuel requirements in the aircraft at all times.

4. Improper Calibration - If the EDM-960 has not been properly calibrated it will not display accurate fuel levels in the tanks. It is important you verify the accuracy of the EDM-960. Always crosscheck your measured fuel levels in the tanks with the readings on the EDM-960 before each flight.

5. Poor Connections - Poor connections between the wires leading from the EDM to the fuel sensors can become intermittent. An intermittent connection most likely will show up as wandering or inaccurate readings on the EDM-960. Always crosscheck your measured fuel levels in the tanks with the readings on the EDM-960 before each flight.

6. Defective Fuel Level Sensors - Fuel sensors can become intermittent or change resistance with age. It is not uncommon to find intermittent problems even in new sensors. An intermittent problem with a fuel sensor most likely will show up as wandering or inaccurate readings on the EDM-960. Always crosscheck the measured fuel levels in the tanks with the readings on the EDM-960 at each fill up. If you ever find an inaccuracy issue or any other problem with a fuel level display on the EDM-960, troubleshoot and fix the problem before the next flight.

DETERMINE THE FUEL LEVELS IN THE AIRCRAFT.

1.The use of the EDM-960 does not eliminate or reduce the necessity for the pilot to use good flight planning, preflight and in-flight techniques for managing fuel. It is important the pilot adopt the practices listed below. If you are not familiar with these techniques, contact the FAA to acquire proper training.

2. Flight Planning - Always calculate the fuel requirement for each leg of a flight, including any alternate plans for bad weather. Keep this information available in the aircraft during the flight. Keep a chart of the published fuel flows for various flight/engine conditions in the aircraft. Keep a chart of the measured fuel flows for various flights in the aircraft. Measured fuel flows can be considerably different from published figures. This usually is due to old, inaccurate engine instruments.

3. Preflight - Do not rely on the EDM-960 to determine the fuel level in the fuel tanks. The pilot must visually check/measure the fuel levels in the tanks before every takeoff.

Crosscheck the measured fuel levels with the displayed levels on the EDM-960. Also, crosscheck these levels with the fuel requirements for the flight listed in your flight plan.

4. In Flight - Make the EDM-960 part of your normal instrument scan. Crosscheck the fuel levels displayed on the EDM-960 with your flight plan at each leg of the flight or every 30 minutes (whichever happens first). If there is a discrepancy, land the aircraft at the nearest airport and verify the fuel levels. Discrepancies should be taken seriously.

5. New Pilot or Owner of the Aircraft - If there is a new pilot or owner of the aircraft, it is the previous aircraft pilot/owner's responsibility to insure the new pilot has read this manual and is aware of any accuracy limitations and other important considerations. All limitations and operating characteristics learned from operating the EDM-960 must be passed on to the new pilot/owner.

3. Instrument Marking

The TSO label on the instrument is marked as to the instrument's configuration and DO-160 and DO-178 testing.

The EDM-960 system consists of one (1) EDM-930 Display P/N 790000-C-120, two (2) EDM-950's P/N 790000-B-(xxx), two RADs P/N-790749, and all related wiring and connectors.

Model Number / Part Number	Description
EDM-930 PN 790000-C- [120]	Display only with TFT (liquid crystal) Type
EDM-950 PN 790000-B- [XXX]	DAU (Data Acquisition Unit)
PN 790749	RAD (Remote Alarm Display)

PRIMARY INSTRUMENTS

EGT	FUEL FLOW	Remote Display
CHT	FUEL PRESS	TIT
OIL TEMP	RPM	CDT
OIL PRESS	MAP	FUEL Quantity

NON-PRIMARY INSTRUMENTS

EGT 4-9	Time to empty	OAT, AMP, VOLTS, CARB, IAT
OAT CARB	Required to WP	Shock Cooling Lean Find
Volts Amps	Reserve at WP	Differential EGT
IAT	MPG	Percent of HP

Example PN 790000-(X)-(XXX) (X) denotes EDM-900 or EDM-930, (XXX) denotes Part Number for a specific aircraft with or without and engine STC. Each PN is specific to a Make and Model Aircraft with or without STC. In which the information is gathered from the Aircraft POH or STC Data sheet.

	Aircraft type w/engine STC No. if applicable	JPI assigned Data Base Part No. per Limits found in the POH or engine STC for a specific aircraft	Part No. Displayed on 930 RAD at Start-up or 900 message area
	Cessna 182-P	534	790000-X-534
	Cessna 182-P, STC12345NW	875	790000-X-875

4. Primary TSO Label

[ ] PN 790000-A-[xxx], Wt:1.7 lbs
[ ] PN 790000-B-[xxx], Wt:1.7 lbs
[ ] PN 790000-C-[xxx], Wt:2.7 lbs
[ ] PN 790000-C-[120], Wt:2.7 lbs

SN: xxxxx

J.P. Instruments, Inc
Costa Mesa, CA, 92626

MFG DATE: xx/xx/xxxx

TSO-C43c, CLASS 1A TSO-C45a, TYPE TSO-C55c, TYPE II
TSO-C44b TSO-C47, TYPE II TSO-C49b, TYPE I/II

Bld-1: xxx.xx.xxxx
POWER: 14 / 28 VDC
CURRENT: 4.0 AMP MAX

DO-160E ENV.CAT. D1XBAB[SBM]XXXXXXABBBAWM[B3K33]XXA
DO-178B LEVEL-C H/W 7999-x S/W PN 7990-x

Note: EDM-900/930/950 TSO-C55, incomplete system for Type I (Float Inst.), no sensor tested
Note: EDM-950 (Display-less) incomplete system for all TSO's
Note: PN790000-C-120 incomplete system Display only.

5. Operation and Abbreviations

Gauge Function	Message Area Alarm Abbreviation
Primary	**Primary**
Engine rotational speed	RPM xxxx
Engine Manifold Pressure	MAP xx.x in hg
Engine Cylinder Head Temp	CHT2 xxx ^{o}F
Engine Oil Temperature	O-T xxx ^{o}F
Engine Oil Pressure	O-P xxx ^{o}F
Fuel Pressure	F-P xx PSI
Fuel Flow to engine	F-F xx.x GPH
Comp. Discharge Temp.	CDT xxx ^{o}F
Turbine inlet Temp. Left side	TIT-L xxxx ^{o}F
Turbine Inlet Temp. Right side	TIT-R xxxx ^{o}F
Single Turbine Inlet Temp.	TIT xxxx ^{o}F
Non-Primary	**Non-Primary**
Exhaust Gas Temp.	EGT2 xxxx ^{o}F
Shock Cooling of CHT	CLD xx ^{o}/MIN
Differential Temp. of EGT	DIF xx ^{o}F
Bus Voltage	Volts xx.x
Amperage Load	AMPS xx
Outside Air Temp.	OAT xx ^{o}F
Estimated Time to Empty	Est. T to E xx:xx H:M
Fuel used to date	USED xx.x GAL
Estimated Remaining fuel	Est. REM xx GAL
Estimated Fuel required to Waypoint	Est. WP REQ xx GAL
Estimated Fuel Remaining at Waypoint	Est. WP RES xx GAL
Nautical Miles per Gallon	ECON xx.x MPG
Brightness, Dim control	DIM/BRT

The EDM-960 is a combined electronic indicating system made up of one Display Unit and two Data Acquisition Units one mounted behind each engine. Which displays to the pilot powerplant parameters. It replaces all previous primary digital and/or analog instruments: The display has a message area below the EGT/CHT's. Above are Abbreviation's used in the Message Area, the parenthesis (X)* denotes cylinder No.

Remote Alarm Display Operation (RAD)

The RAD is composed of two (one per engine) red 0.2" high by 8 character displays. The RAD displays flashing alert messages when any of the parameters reaches its preset trigger point, otherwise the RAD will display MAP and RPM.. The RAD also serves as an alert back-up if the main LCD display screen becomes inoperative. The RAD will extinguish when no primary alarms exist or when the pilot acknowledges the alarm by tapping the STEP button on the EDM-960. On initial startup or whenever power is turned on, the words 'EDM-960 PRIMARY' are displayed, followed by the make and model of the aircraft for which the primary limits are set.

Alarm hierarchy

When a measurement limit is reached, the pilot can momentarily tap the STEP button on the EDM-960 instrument to extinguish the particular flashing alarm acronyms. If another measurement has also reached its limit, that label will then begin to flash. The pilot should continue to monitor the affected parameters (just as he would using a conventional analog display that had reached a limit). The bar graph functions of CHT, EGT, and TIT remain displayed for easy reference should one of these limits be reached.

1. OILP_LO.	6. FLVL.	11. CLD.	16. AMPS.
2. FP_LO.	7. REM.	12. RPM.	17. CDT.
3. OILT_HI.	8. FP_HI.	13. OILT_LO.	18. RES.
4. CHT.	9. MAP.	14. VOLTS.	19. EGT.
5. TIT.	10. DIF.	15. OILP_HI.	20. Fuel Flow.

6. Dimming

Automatic dimming is provided to dim both the panel display and the remote alarm display, RAD. Dimming can also be accomplished manually to change the Automatic setting. Tapping the third right button will bring up the Dim/Bright menu making the 3 and 4th button Dim or Bright in % Bright. Continuously holding this button increases brightness mode display.

Each EDM-950 has four mounting holes to mount to the avionics equipment rack or to the cold side of the firewall. The data ports are then connected to the display unit via a harness terminating at the EDM-930 display with a 25 pin D-Sub connector.

Remote Alarm Display PN 790749

DAU EDM-950 P/N 790000-B

7. Locating and Installing the Indicator and Remote Alarm Display, RAD

A) The diagram below should be used as a guide for cutting and drilling the mounting and buttonholes in the instrument panel. The dimensions shown are for the final cutouts. Allow extra clearance for any panel finish such as powder coat. The plastic button caps are removable by grasping and pulling each off. The EDM-960 display mounts in a 6x4.5 cutout. Mount the indicator using the figure below as a guide. If the panel has too many holes for a clean installation, it is recommended that an 10” aluminum overlay panel be constructed and installed over the original instrument panel and the EDM be installed into this overlay panel.

B) The Remote Alarm Display PN-790749 mounts in a 5/8 inch hole in the panel above the Attitude Gyro / D.G. / HSI +/- 0.5 inches from their centerline directly in front of the pilot.

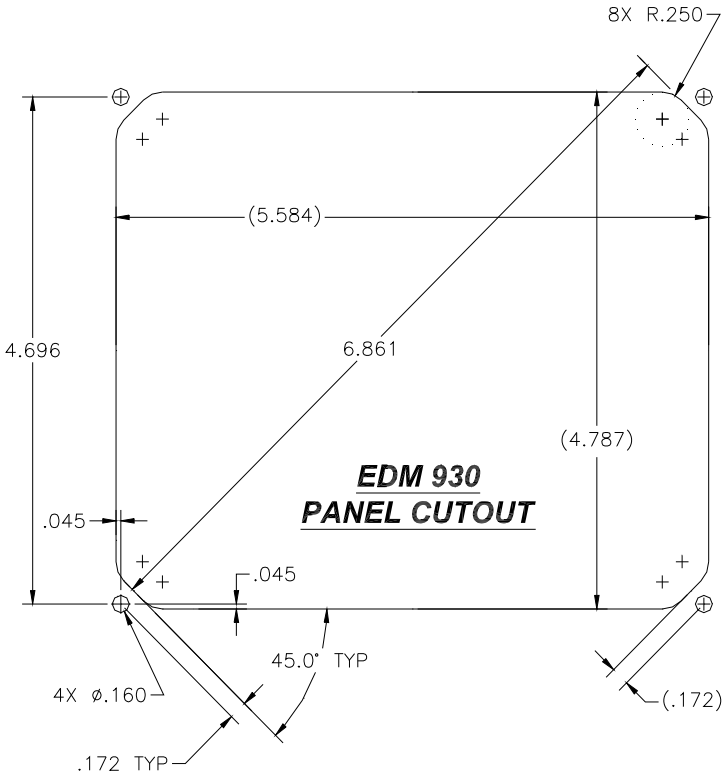

Figure 2: EDM-960 Mounting Area

8. EDM-960 Display Installation

Choose the Proper Installation Location
The display is best located within the natural scan and easy reach of the pilot. The recommended mounting location is defined as the distance from the vertical centerline of the Primary Flight Instruments to the outer edge of the further most gage displayed on the EDM-930.

HORIZONTAL ORIENTATION:
The EDM-960 display may be mounted from the vertical centerline of the Primary Flight Instrument "T" to a maximum of 21" to the further most gage of the EDM-930 display and to the left of the centerline as much as needed. See fig 2.

VERTICAL ORIENTATION:
The EDM-960 to be mounted within +/- 10" from the horizontal centerline of the Primary Flight Instrument "T". The installer should insure that the EDM-960 display is not obstructed by either the glare shield or the control wheel.

The installing A&P and IA should decide that where the installation is to occur does not conflict with the viewing angle requirements listed above.

Note: Any appliances that are installed under the original Type Certificate (TC) that require relocation should be relocated in accordance with the guidance provided in AC.23.1311-1B, Section 15.4 (presented below). Special care should be exercised to insure that proper pilot visibility of displays and pilot access to controls in not interfered with, with respect to relocated instruments and non-relocated instruments.

9. EDM-960 Key Card Installation

The EDM Key Card activates the primary engine instrument limits for you engine monitor. This key card contains the primary engine POH markings data. After installation do not remove the Key Card from the instrument. The key card is programmed with the serial number of your EDM and the make, model and year of your aircraft. Every time you power up the EDM, the Remote Auxiliary Display (RAD) will show your aircraft make and model in the right engine RAD. The Left RAD will display “EDM-960”

Each system is configured to a specific aircraft type. Therefore for example, a Cessna 310R would have a different series Part number than a Cessna 310Q.

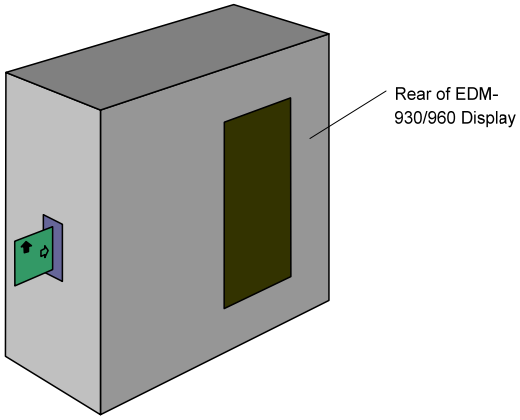

Installation

With the EDM removed from the aircraft, position it on a flat surface with the rear of the instrument facing you as shown below. You do not have to remove any cables if you have sufficient service loop available. Follow the appropriate instructions below.

Open the small access door on the side of the EDM-930/960 Display using the appropriate tool.

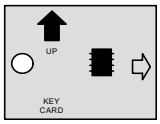

Hold the Key Card so that the UP arrow is facing up and in insertion arrow is facing to the right.

Insert the Key Card in the guide rails until you feel it snap into place. Secure the access door.

Power up the EDM and confirm that your aircraft make and model is initially shown in the RAD upon power up. Install the EDM back into the aircraft. Your installation of the Key Card is complete.

If your EDM should ever have to be replaced with a unit with a different serial number, the factory will reprogram your Key Card to match the new serial number. You should always retain your fuel quantity calibration records, as these may need to be manually re-entered in a different or serviced unit.

10. EDM-960 in aircraft with wing-mounted engines

Figure 1

RAD: Left/Right engine

Cockpit Display unit

Back of Display unit

11. EDM-960 in aircraft with centerline thrust engines

FRONT/REAR engine RAD's must be oriented top to bottom as shown below.

FRONT
REAR

EDM-960 centerline thrust display

12. Wiring harness for 950

Five connectors are protruding from each of the two EDM-950 DAU's, one for each engine. Connect the five wiring harnesses to the rear of the 950 DAU mounted on the cold side of the firewall and run the cables through the firewall into the engine compartment. Allow sufficient service loop to facilitate removal of the connectors for servicing. These wiring harnesses are labeled as follows:

EDM-950 DAU	Harness PN	
P1	790200	Oil temperature, Induction temperature, Carburetor temperature, Outside air temperature, Turbine inlet temperature, Turbine inlet temperature 2, Engine ground.
P2	700700 700702	CHT, EGT 6 cylinder 10 feet CHT, EGT 4 cylinder 10 feet
P3	790420	RPM, MAP, Oil pressure
P4	700708	Fuel flow transducers FX-201, GPS
P5	790723	Fuel pressure, amperes, Voltage, and fuel level.
P6	790827	Part of fuel qty sensor interface. Connects with J6 and P5
P7	790811	FQ, interface to Fuel tank.
P8	790807	Power for, GPS , Aux Light to display on cockpit display

Route the wires from the connectors through the firewall using fireproof rubber grommets and flame retarding silicone. Use an existing hole if possible. All wires must be routed away from high temperature areas (exhaust stacks, turbochargers, etc.). Secure probe and sensor leads to a convenient location on the engine approximately 8 to 12 inches from the probe or sensor, being sure there is sufficient slack to absorb engine torque. It is essential in routing the probe wire that this wire not be allowed to touch metal parts of the air-frame or engine since abrasion will destroy this high temperature wire. Secure wires along the route to the indicator. Secure wire using original clamps, tape or tie wrap if possible.

13. Wiring harness for Display

EDM-930 Display	Harness PN	Description
LEFT/FRONT RAD	790749	Category 5 jack and cable for RAD Right engine
RIGHT/REAR RAD	790749	Category 5 jack and cable for RAD Left engine
P8	790807	25 pin D-Sub - GPS RS232, GND, Aux Tank Intfc.
LEFT/FRONT ENGINE (P9)	790808	Canon Plug (Installer wired) - Power, RS232 MFD data
RIGHT/REAR ENGINE (P10)	790808	Canon Plug (Installer wired) - Power, RS232 MFD data
P9/P10	174203	Connector Lft/Rt Data (field installed to P11)
P11	790808	Power DAU, Data for DAU
P12	790810	Optional—Aux Light interface cable to J12 on P8

CAUTION: Be sure any wiring does not obstruct the control movement under the instrument panel.

The probe wires must not be tied in with ignition, alternator or engine cabin heater ignition wires because of potential interference with readings.

The temperature probe wiring harness is made of Chromel-Alumel alloy wires that must not be substituted or extended with copper wire. The power and ground wire are normal copper. Temperature probe leads may be spliced with additional Chromel-Alumel wire using copper butt splices.

When the installation is complete all wires should be secured using ties and carefully checked for interference, rubbing or chafing with flight control cables or other moving parts.

14. Pressurized Aircraft wire Routing

Pressurized twin Engine Aircraft have a factory installed pressure bulkhead pass thru boot or connector at each wing root where all electrical wires from the engine pass through to the cockpit. If you can not find the opening follow the wires from the engine to the pressure vessel. If a boot with sealant is used remove the sealant, pass the three RS-232 signal wires from the Data Acquisition Unit mounted in the engine compartment to the Display. Upon accomplishing this reseal the hole with factory recommended sealant.

An alternate method for a cannon connector is to use existing wires in the aircraft going thru the pressure bulkhead. The EDM-960 replaces the RPM, MAP, Oil Temperature, Oil Pressure and TIT gauges which have wires going thru the pressure bulkhead. Any combination of three wires can be used to transmit signal to the cockpit display. Making a new hole in the pressure bulkhead is beyond the scope of this document and will require a DER or other FAA approval.

15. Power Connection

The EDM-960 automatically accommodates either a 14 or a 28-volt electrical system. Master Bus power must be individually provided, via three 5 amp circuit breakers, to the two DAU units and the EDM-960 head.

IMPORTANT: Insure the DAU ground wires are connected to the engine block. Any wiring extensions or additions beyond JPI supplied wiring must be MIL-W-32759/16 or equivalent. The EDM-960 has a 8-second warm-up. No connection to the aircraft dimmer system is required because the instrument dims automatically with reductions in ambient light. The instrument is designed to reset at less than 10 vdc bus power, therefore the instrument may reset on engine start (typical for 14 vdc systems). This is normal due to the starter loading down the battery output to below 10 vdc.

16. Probe Wiring

When cutting the pair of leads to the proper length to connect to the probes, leave enough slack in the wiring so that probe may be interchanged to an adjacent cylinder if necessary for trouble-shooting and servicing. Thermocouple wire length is not critical and should be trimmed to any length as required for a clean installation.

The Temperature probe must be wired with the correct polarity. The temperature probe connects to its temperature indicator with yellow jacket Teflon Chromel-Alumel wire supplied. Strip the wires as shown below—observing color-coding.

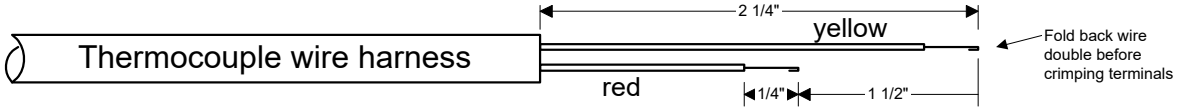

Terminate each wire with a crimp-on ring terminal, provided. The ring terminals may be crimped with a “service-type” tool, however AMP part number 48518 crimp tool is recommended. Verify the quality of each crimp with a sharp tug on the wire. The terminal should be impossible to pull off when crimped correctly.

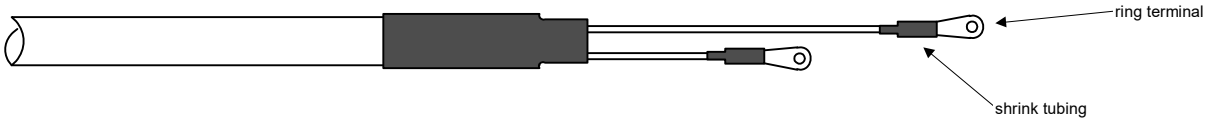

Place a ¼ x 4-inch sleeve over each pair of wires in the wiring. Connect the wire ring lug to the probe ring lug using the supplied number 4 screws and nuts, placing the star washer *between* the ring lugs, not against the nut.

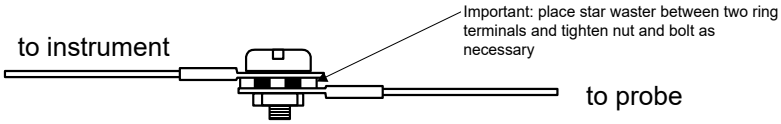

Slide the sleeve over the joint and secure with three tie-wraps.

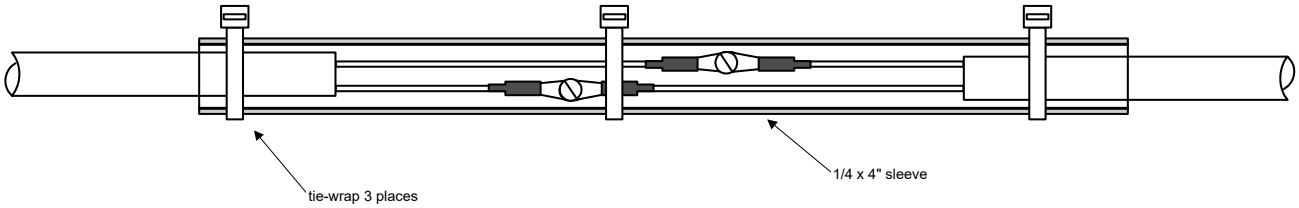

The most common installation problems are related to poor quality terminations.

17. Wiring Markings

The EDM-960 is supplied with special Teflon insulated Chromel Alumel factory assembled wiring harness configured for the correct number of cylinders. The wire harness is marked E1= EGT-1, C1= CHT-1, etc.

NOTE: Unlike most other EGT & CHT installations the probe wire length is not critical and should be trimmed to any length as required for a clean installation. Do not extend the thermocouple wire with copper wire.

18. Exhaust Gas Temperature Probe (EGT) Installation

Use the J2 connector harness 700700 or 700702 labeled E1 through E4 or E6. Remove the existing EGT gage and Probe. Replace with JPI probe M-111 in all exhaust stacks.

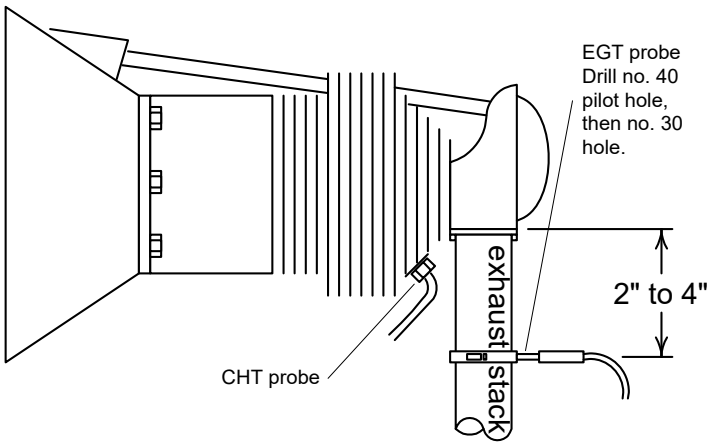

The Model M-111 Probe will fit any engines where the existing holes in the exhaust stack are 1/8" to 1/4" in diameter. If no hole exists, it will require the drilling of a 1/8" diameter hole and ream to fit. It is important that each probe be mounted the same distance from its exhaust stack flange. A nominal distance of 2 to 4 inches from the exhaust flange is recommended. If the recommended distance is impractical because of obstructions, slip joints or bends in the exhaust system then position the probes a uniform distance from the flange as space permits. Do not mount probes in slip joints. Be certain to locate all holes BEFORE drilling to ensure that nothing interferes with the probe, clamp, screw or wire. Careful matching of probe position will provide best temperature readings.

Insert the probe in the exhaust or previously drilled hole so that the tip of the probe is in the center of the exhaust stream. Tighten the stainless steel clamp to a torque of 45 in/Lbs. Cut off the excess strap close to the screw.

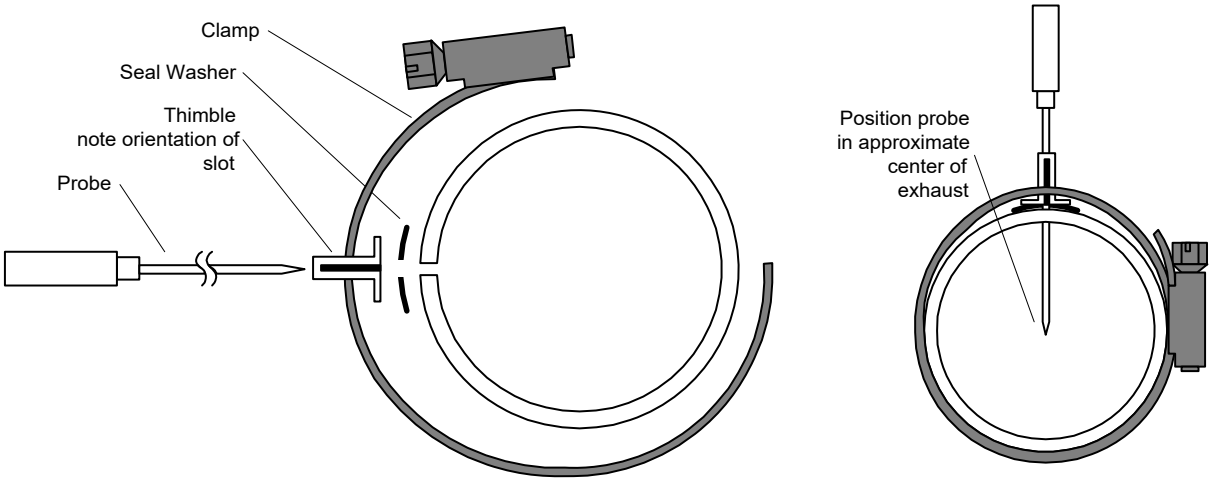

RADIAL ENGINE EGT

Radial engine exhaust, require a larger EGT clamp (supplied) to fit the 2.5 inch exhaust pipe. The EGT probe is installed in the same fashion as a Lycoming or Continental engine and should be placed between the exhaust pipe flange and the accumulator at a distance of 2 to 3 inches form the engine exhaust flange. Cylinder head temperatures are measured with a spark plug gasket type probe placed under the front sparkplugs. Front spark plugs will read 15 to 20 degrees cooler than the rear plugs. Refer to the engine manufactures recommended location. Do not route the EGT/CHT harness in with the ignition harness. Do not extend the yellow thermocouple leads with copper wire.

19. Turbine Inlet Temperature (TIT) Probe Installation (optional)

Use the J1 connector harness 790200 and insert the yellow wire into the connector pin 16 and the red wire into pin 17. The standard TIT probe PN M111-T with a #48 clamp is placed in the exhaust stack accumulator to a maximum depth of 1/2 inch and approximately 4 inches from the turbine inlet if possible, on the waste-gate side of the turbine.

19.1 Using the Factory original TIT Probe

The factory installed TIT probe (K-calibration) is compatible with the JPI EDM-960 System. Connect the JPI wire marked TIT. Replacement probes should be purchased per part number from the aircraft manufacturer.

The EDM-960 permits you to remove the factory installed TIT indicator and leave the TIT probe installed. Connect the JPI wire marked TIT directly to the probe noting color polarity. The TIT probe should now have only the JPI leads attached to it. No calibration of the EDM-960 is necessary.

20. Cylinder Head Temperature (CHT) Probe Installation

Use the J2 connector harness 700700 or 700702 labeled C1 through C4 or C6. The JPI probe is a bayonet probe P/N 5050 that has a captive 3/8-24 boss that is screwed into the head of each cylinder.

For Indicator replacement, replace your existing CHT probe and adapter, a bayonet or screw in type with one supplied by JPI. Install the probe on the same cylinder from which you removed the original equipment probe. Your current CHT probe is installed in the hottest cylinder as determined by the airframe manufacturer.

RADIAL ENGINE (CHT) SPARK PLUG GASKET

The spark plug gasket probe, P/N M-113, replaces the standard copper spark plug gasket on one spark plug. The probe is usually placed on the Rear plugs. After many removals the probe may be annealed for re-use. Heat to 1100 ^{o}F and quench in water.

21. Outside Air Temperature (OAT) Probe Installation

Connect the OAT probe to the LEFT ENGINE DAU J1 connector harness 790200 labeled OAT. All wiring must be type K thermocouple wire. Do not splice ordinary copper wire in any temperature probe circuits.

Install the OAT probe, PN 400510 in the airframe manufacturer's recommended location. If this information is not available, place the OAT probe in clean airflow such as in a cabin air scoop or below the underside of the wing away from engine heat or exhaust. In this case it is recommended that the installation be done similar to the antenna installation. The outside aluminum shield tube is used to both hold the probe in place and shield it from radiated heat from the sun it can be replaced with a 5/16 nut. The OAT option is typically displayed as digital gauge and has no associated alarms.

22. Compressor Discharge Temp Probe Installation (optional)

Use the J1 connector harness 790200 and insert the yellow wire into the connector pin 3 and the red wire into pin 4. All wiring must be type K thermocouple wire. The Induction Air Temperature probe, (IAT), is installed just after the inter-cooler and the Compressor Discharge Temperature (CDT) just before the inter-cooler. The probe is the same as an EGT probe and installed similarly to an EGT probe. A large clamp is supplied to fit around the air duct leaving the inter-cooler. Alternately a 1/8 NPT fitting is available. IAT option is displayed as an independent digital temperature like "125 IAT". On non-turbo engines the IAT in reality is the Carburetor temperature and displayed as "34 CRB."

23. Carburetor Probe Installation (optional)

Use the J1 connector harness 790200 and insert the yellow wire into the connector pin 5 and the red wire into pin 6. All wiring must be type K thermocouple wire. Do not splice ordinary copper wire in any temperature probe circuits. Locate the access hole (1/4-24 thread) in the carburetor near the butterfly valve. Remove the screw plug now in that hole and screw the CRB probe into the carburetor throat. No drilling or machining of the carburetor is necessary.

24. Oil Temperature Probe Installation

The sensor port is a standard 5/8-18 thread for both the Continental and Lycoming engines. Probe PN 400509 is a complete assembly using type K thermocouple wire (red/yellow). Connect the wire marked oil temperature observing polarity. Wire length has no effect on the readings. Oil temperature will be displayed as an independent temperature digital and bar-graph. Check with engine manufactures proper location for oil temperature. Check for oil leaks before first flight.

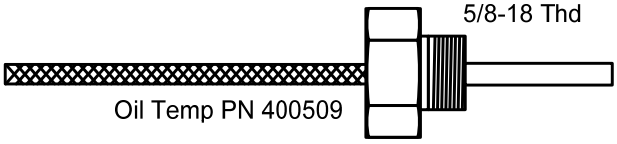

25. ***Oil Pressure Sensor Installation***

Use the J3 connector harness 790420 labeled OIL-P for a VDO pressure sensor (shown in diagram below).

Mount Oil Pressure sensor using aluminum clamp MS21919-25 to FIREWALL, DO NOT MOUNT DIRECTLY TO ENGINE

Connect the pressure sender to the pressure line using a flexible hose (not supplied) and fitting as depicted in the drawing below. Connect the other end of the hose to the engine manufacturer's recommended location for engine oil pressure. There is no polarity on the oil pressure sensor wires.

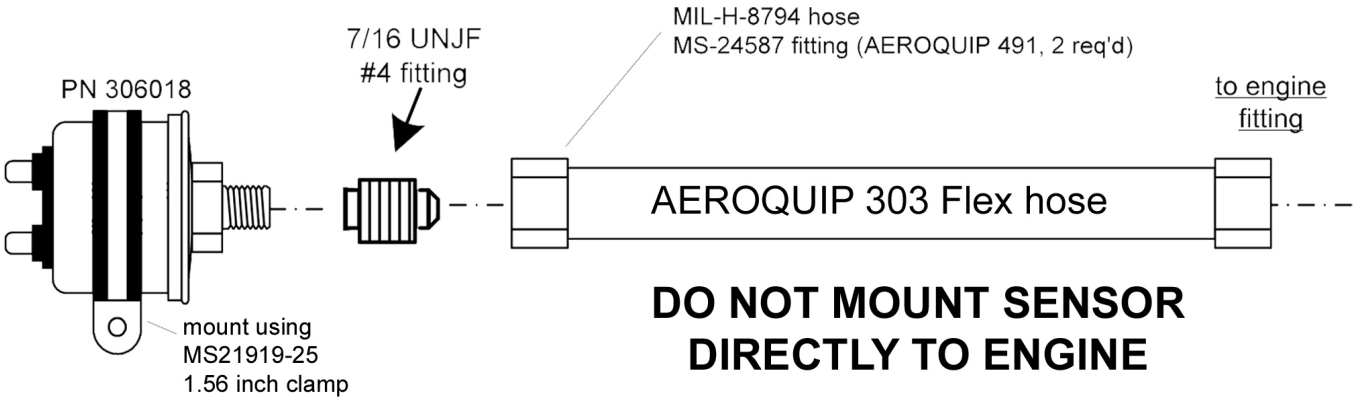

25.1 Fuel Pressure Sensor Installation

Use the J5 connector harness 790723.

Mount the pressure sensor to the pressure line using a flexible hose and fittings (not supplied) as depicted in the

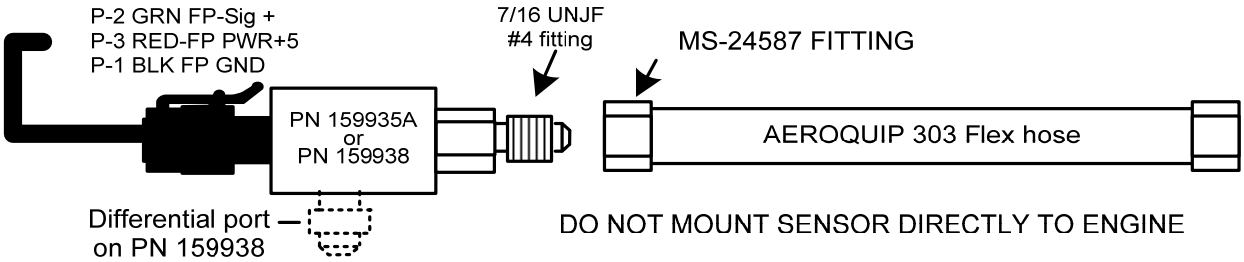

drawing below. Use Aluminum Clamps MS21919WDG25, or WDG16 to mount the pressure sensor to engine mount structure or firewall. Do not mount the sensor's directly to the engine. Connect the other end of the hose to the existing pressure line. Later, you will connect the pressure sensor to the three pressure sensor wires through the supplied 3-pin connector. capsadense sensor PN 159935A Carbureted or PN 159938 for turbocharged. Fuel pressure sensors are only supplied if the POH requires it. Fuel pressure can be supplied at additional cost.

26. Ammeter Shunt Installation

Use the J5 connector harness 790719-X labeled AMP+ and AMP-. Connect the harness leads using ring terminals to

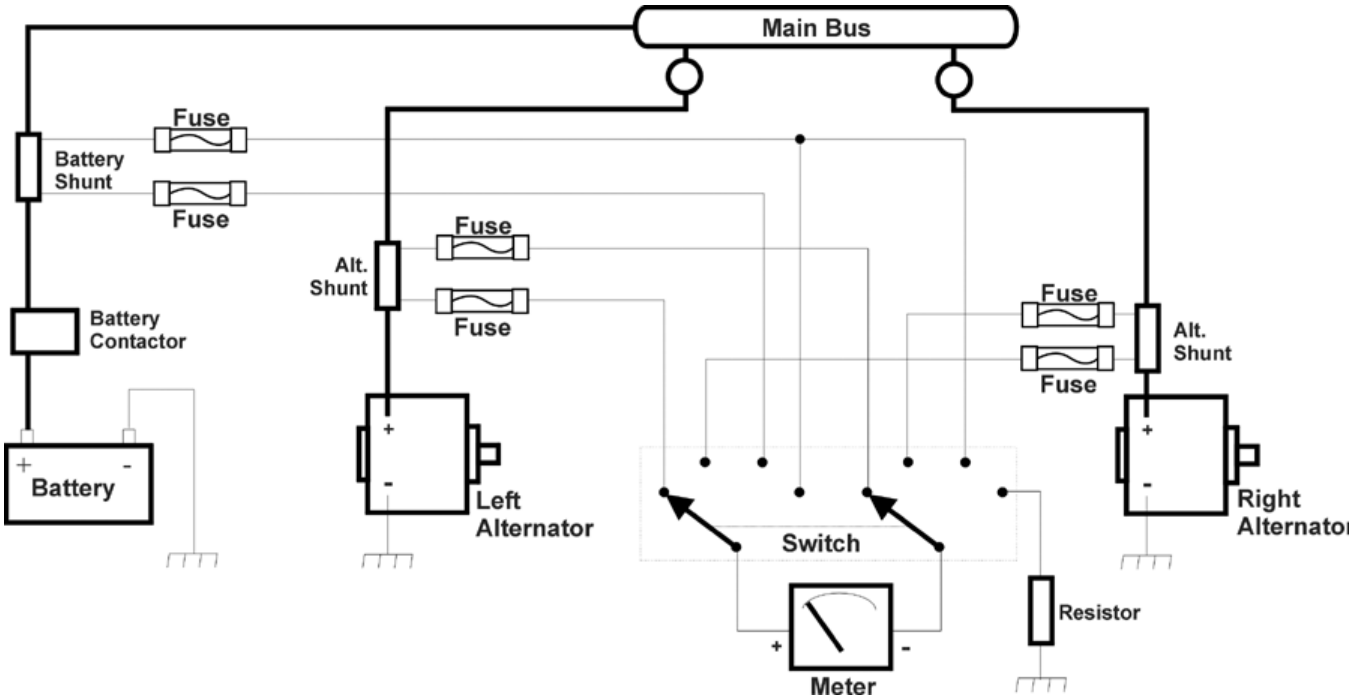

the smaller terminal screws on the side of the shunt. The information will be displayed as Amp-1 and Amp-2 on the display. Typical charging circuit for a Cessna 310 (reference only)

26.1 Volt Meter reading is derived from the bus location that the EDM Display is wired to. A second voltage input is also available.

26.2 Load Meter Configuration. The shunt must be installed in the main bus where it will be the load meter configuration showing alternator load (positive only). Be sure that the negative side of the shunt is connected to the main bus in the load meter configuration. There are no alarms for the load meter configuration.

27. General Fuel Flow Transducer Installation

Use the J4 connector harness 700708 labeled FFSIG (white), FFPWR (red), and FFGND (black). If no previous fuel flow transducer is installed, install transducer per Report 503, Rev B, 03/14/97, FUEL FLOW TRANSDUCER INSTALLATION. The EDM-960 receives signal from any installed FloScan Transducer with the following FloScan P/N's embossed on to the top of the transducer. The K-Factor is marked on the side of the Transducer and on an attached white ticket. Route the JPI wires along the existing wiring bundle lacing every foot. The EDM is approved to work with the following Shadin equivalent PN.

FloScan PN	Shadin equivalent PN
201-A	
201-B	**680501/680600**
231	**680503**

Before connecting any hoses to the transducer, thoroughly clean them and insure they are free of any loose material. Never pass air pressure through the transducer or use Teflon tape/pipe cement; damage will occur. Use only steel fittings never use aluminum fittings on transducer. Aluminum will gaul. Remove the transducer cap plugs only when ready to install the hoses. Note the direction of fuel flow marked on the transducer. Fuel must flow in this direction. Reverse flow installations will read ½ the required flow. Mount the transducer with the three wires pointing up. The K-factor is printed on the side of the transducer and on a tag. Write down the K-factor here for future reference.

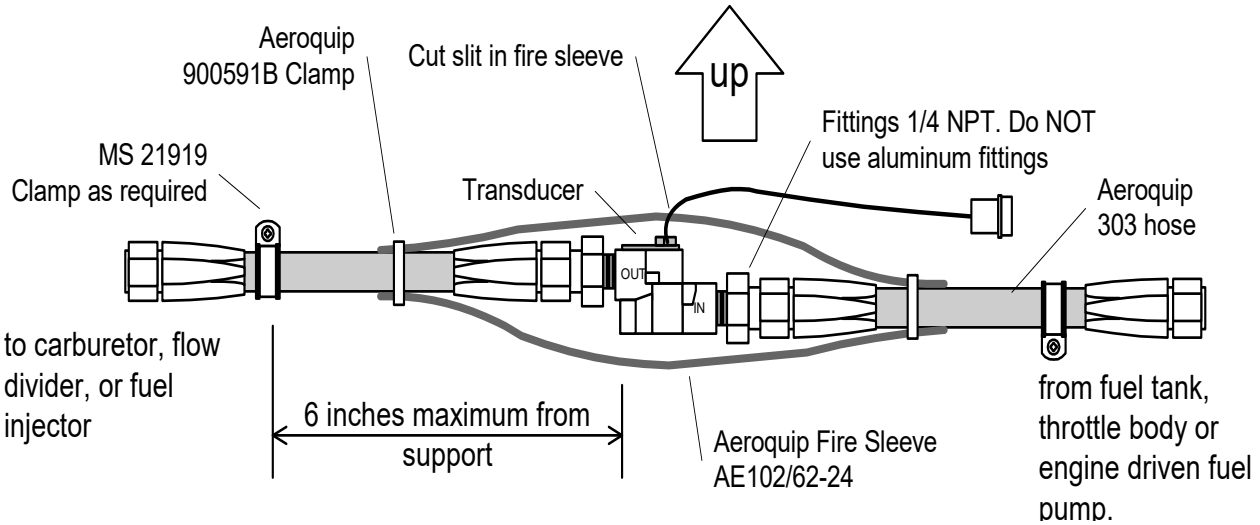

The EDM-960 fuel flow transducer receives signal from any installed 201 transducer with part numbers imprinted on to the top of the transducer. For specific engine installations see Report 503

28. Fuel Level Interface Installation

The EDM-960 has the capability to interface to 4 tanks in the aircraft's fuel level system. This is done by connecting the DAU directly to the senders or in some cases to the aircraft's fuel sender signal conditioner, for example the Pennycap system which converts capacitance (frequency) to a voltage output, typically found in Cessna Twins. The DAU has the capability to process signals from two types of sender signals: Resistive output, Voltage output. JPI provides the appropriate interface hardware (the P5 harness and any associated signal conditioners) based on information you provided when your order was placed. Once installation is completed, you will perform a fuel level calibration. The EDM-960 stores this calibration internally. NOTE: The fuel quantity function will not be available until this calibration has been performed successfully.

28.1 Resistive Output Type Sender System

Locate the wires that run between the existing ships fuel gauges and the senders and disconnect them at the senders. For tanks that have more than one sender, the wiring between the senders must be retained. Make sure the senders do not have voltage on them before connecting to the EDM. Connect the EDM to the senders using the wire pairs coming from the signal conditioner (PN 790802) P7 as shown below. Note that one pair is for MAIN and the other is for AUX. Connect the 'SIG' wire to the senders signal terminal (typically the center stud) and the 'GND' wire to the closest ground terminal near or on that sender.

28.2 Voltage Output Type Sender System

Voltage output type systems usually have a convertor box. This is typical with the 'Pennycap' brand capacitive sender system. The Pennycap convertor box measures sender capacitance and converts it to a DC voltage output signal for the aircrafts fuel level gauge. Connect the EDM to the Pennycap converter box using the wire pairs coming from the signal conditioner (PN 791802). In some cases the Pennycap convertor box alternately monitors two tanks per wing controlled by cockpit selector switch positions. This is typical for Cessna twins having 4 selectable tanks. The EDM can interface to this system with the addition of the dashed interface hardware (PN 790810) shown below. NOTE: This drawing is accurate for most models of the Pennycap system; however it is the installer's responsibility to verify proper connections to the Pennycap output signal. Note: The original ships gauge and all gauge selector switches and related annunciate lights must remain in the aircraft. The gauge could be mounted behind the panel if desired.

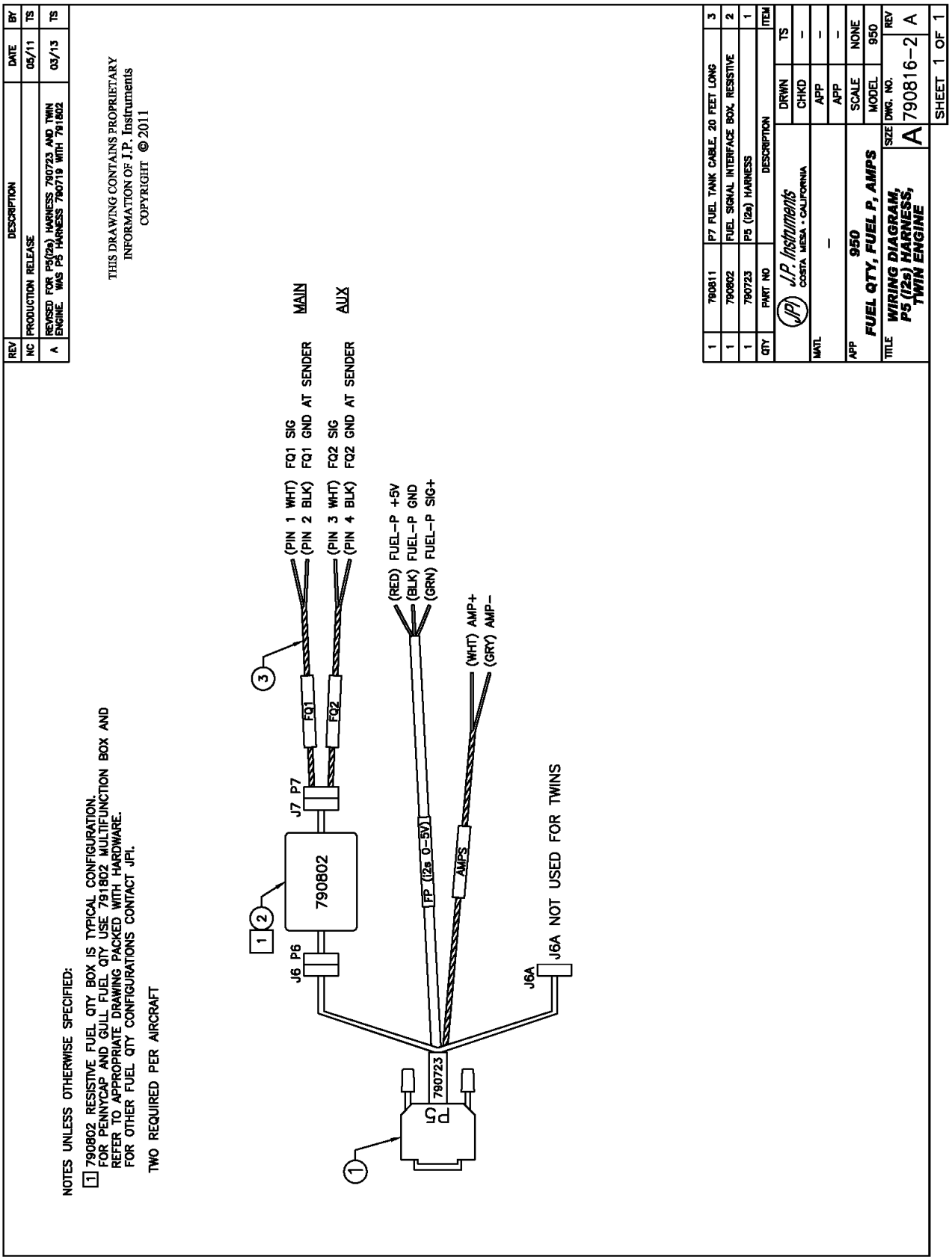
REV
DESCRIPTION
DATE
BY
NC
PRODUCTION RELEASE
05/11
TS
A
REVISED FOR P5(12s) HARNESS 790723 AND TWIN ENGINE. WAS P5 HARNESS 790719 WITH 791802
03/13
TS
THIS DRAWING CONTAINS PROPRIETARY INFORMATION OF J.P. Instruments
COPYRIGHT © 2011
NOTES UNLESS OTHERWISE SPECIFIED:
1 790802 RESISTIVE FUEL QTY BOX IS TYPICAL CONFIGURATION. FOR PENNYCAP AND GULL FUEL QTY USE 791802 MULTIFUNCTION BOX AND REFER TO APPROPRIATE DRAWING PACKED WITH HARDWARE. FOR OTHER FUEL QTY CONFIGURATIONS CONTACT JPI.
TWO REQUIRED PER AIRCRAFT
1
2
3
P5
790723
J6 P6
790802
J7 P7
FQ1
FQ2
(PIN 1 WHT) FQ1 SIG
(PIN 2 BLK) FQ1 GND AT SENDER
MAIN
(PIN 3 WHT) FQ2 SIG
(PIN 4 BLK) FQ2 GND AT SENDER
AUX
(RED) FUEL-P +5V
(BLK) FUEL-P GND
(GRN) FUEL-P SIG+
FP (12s 0-5V)
(WHT) AMP+
(GRY) AMP-
AMPS
J6A
J6A NOT USED FOR TWINS
1 790811 P7 FUEL TANK CABLE, 20 FEET LONG 3
1 790802 FUEL SIGNAL INTERFACE BOX, RESISTIVE 2
1 790723 P5 (12s) HARNESS 1
QTY PART NO DESCRIPTION ITEM
J.P. Instruments
COSTA MESA • CALIFORNIA
DRWN TS
CHKD –
APP –
APP –
MATL –
APP 950
FUEL QTY, FUEL P, AMPS
SCALE NONE
MODEL 950
TITLE WIRING DIAGRAM, P5 (12s) HARNESS, TWIN ENGINE
SIZE A
DWG. NO. 790816-2
REV A
SHEET 1 OF 1

28.3 Fuel Tank Calibration *Setting Fuel Calibration Points*

The EDM interfaces to various fuel level sensor types to facilitate direct reading of the fuel level in the aircraft fuel tanks. The EDM has a multi-point fuel calibration table that you must enter. This table contains calibration values (stored in non-volatile memory) used to translate sensor readings into the displayed fuel quantity values. The calibration information is collected and recorded on paper for later entry into the EDM. NOTE: Fuel quantity gauges will not be functional until the fuel calibration information has been entered into the EDM. You will use the EDM instrument itself as the measuring device to collect calibration data.

The following describes the basic procedures necessary for collection and entry of data into the fuel level calibration table. Note: Any changes to fuel table data will be temporary until you execute the **'SAVE'** function (available after last cell of the last tank table is entered).

Before beginning the fuel table entry/edit process, you must have properly installed and tested for correct functionality of the fuel sensors with aircraft in flight attitude.

WARNING:

- **Never add or remove fuel from the aircraft when the master switch is turned on.**
- **Fuel quantity gauge performance is affected by many factors, such as the integrity of the sensor performance, the accuracy of the calibration data you collected and entered and most importantly your validation that the EDM fuel quantity gauge is accurate and repeatable after installation and calibration. You should not use the fuel quantity gauge system for any flight related operations until this validation criteria has been met.**
- **JPI strongly recommends replacing the fuel quantity senders before calibration**

29. Capturing the sender reading at each calibration point:

Getting Started…Collecting Fuel Level Calibration Data using the EDM as a meter.

1. For each EDM monitored tank, create a paper table with 5 points. The zero gallon point reading is always taken with unusable fuel in the tank. Example of a completed 5 point table for **LEFT** tank:

	LEFT	
F	39.0 GAL	1907
¾	29.3 GAL	1431
½	19.5 GAL	1145
¼	9.8 GAL	971
E	0.0 GAL	685

2. This screen provides real-time readings of all active fuel level sensors. Verify readings look normal. Reading are arbitrary whole numbers
3. Now add fuel as needed to match the required volume for a particular point. Allow this to settle, then take a reading and record it on paper adjacent to that point.
4. Repeat this process until all points have been recorded for each tank.

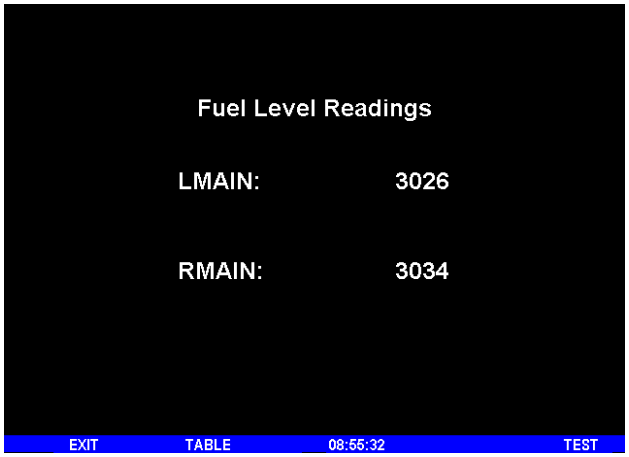

Actual Screen Shot

29.1 After you have collected your data

After you have collected your data…Entering / Editing Fuel Level Calibration Data

The Fuel Table Editor is a spreadsheet type format allowing you to easily see the volume and related calibration values side by side. You can easily navigate through the cells to enter values.

1. With power off, hold in **Button 3 (Button 1 being far left)** and then turn on power. Wait until you see '**Do you agree with the disclaimer?**'. Tap **YES** if you agree and wish to continue.

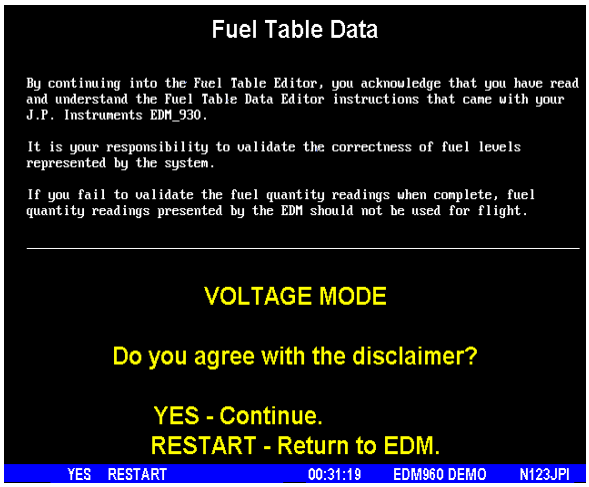

2. Tap **YES** when you see '**Do you have table data?**'.

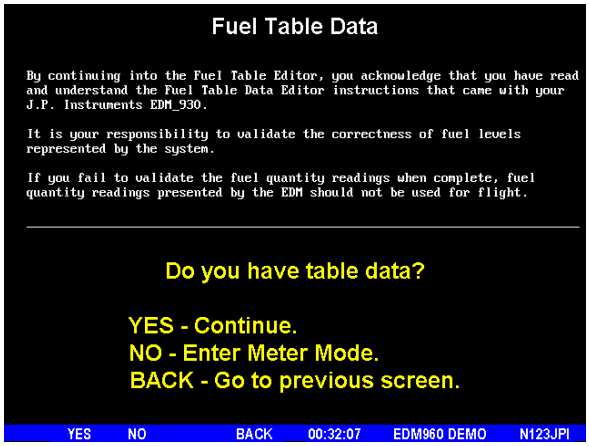

3. Tap **USER** when you see '**Do you want to restore user table?**' (Note: tapping FACTORY causes the fuel table stored on the Key Card to over-write any previous user entries in the fuel table. Use FACTORY if you want to start from the original factory default).

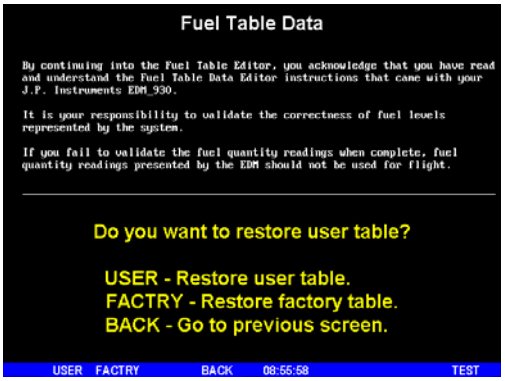

4. Tap **TABLE**. You see '**Fuel Table Data**' (White at top of screen) with a table. You may change any of the fuel levels in the left column except for empty. You will enter the readings taken previously on paper into the right column.

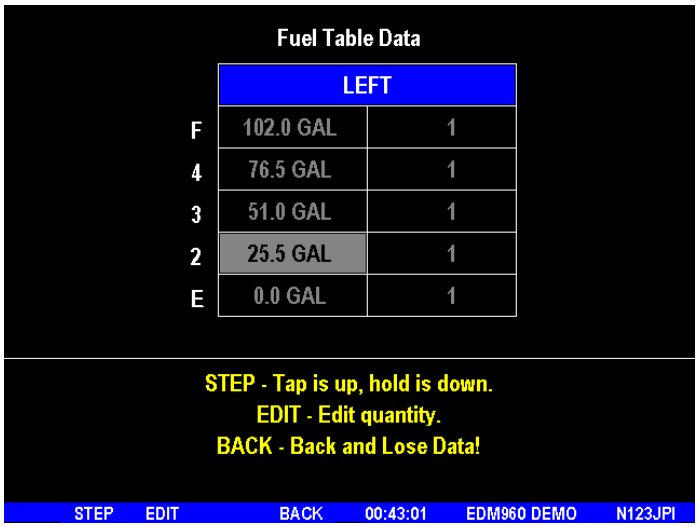

5. Tap/hold **STEP** to select the cell you want to edit. Tap **EDIT** to change the value. Tap or hold **Modify** to change digit. Tap digit to change another part of the number.
6. Tap **SAVE** to record it. Follow the on-screen menus to edit the value. Repeat previous step until all tanks data have been entered.
7. You see '**Save fuel tank data?**'. Answer **SAVE** to store all final data values or **CANCEL** to return to table editing. To complete the process, tap **SAVE** a second time.

30. GPS Interface

The GPS is wired to the EDM-960 head. Refer to the Manufactures GPS manual for the required pin connections on the GPS.

31. Manifold Pressure (MAP) Sensor

Use the J3 connector harness 790420 labeled MAP for the manifold sensor (shown in diagram below).
Connect the pressure sender to the pressure line using a flexible hose (not supplied) and fitting as depicted in the drawing below.
Connect the other end of the hose to the factory manifold gauge.

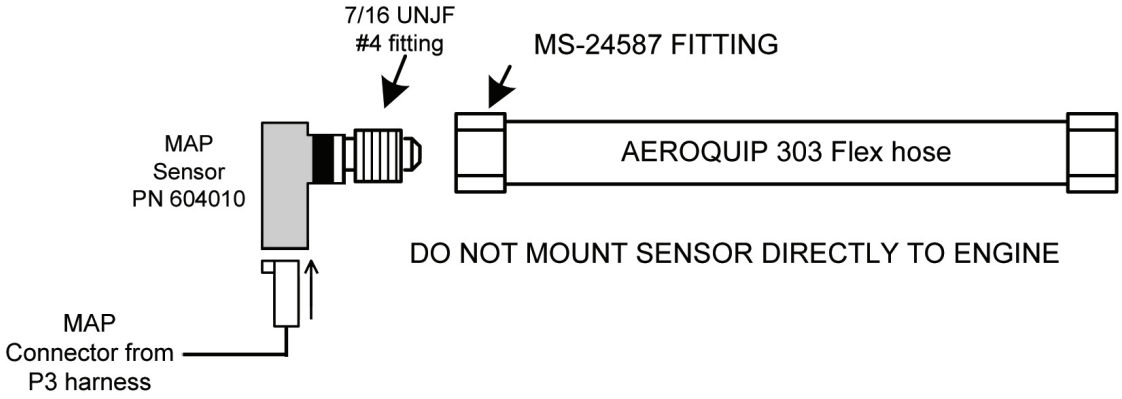

32. RPM Sensor installation

There are four types of magnetos commonly in use. You must have the correct RPM sensor for the magneto installed in the aircraft. The following part numbers apply: Slick – pressurized 4000, -6000 series use JPI P/N 420809. For the Bendix pressurized -1200 series use P/N 420807. Dual magnetos use JPI PN 420808. For the Bendix -20 series and Slick 600 use JPI P/N 420806. Mount the sensor as shown in the appropriate diagram below. Note: this is eligible for installation on all 4 & 6 cylinder engines only.

Bendix Magnetos

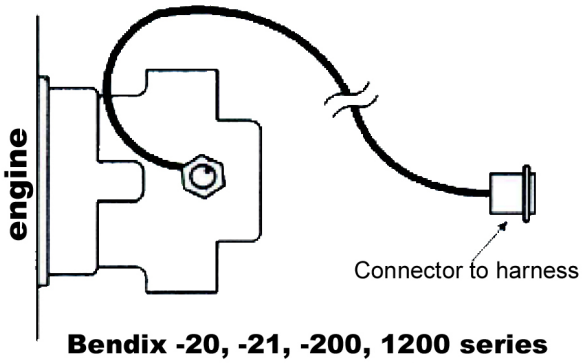

Bendix -20, -21, -200, 1200 series
non-pressurized
JPI 420815-2

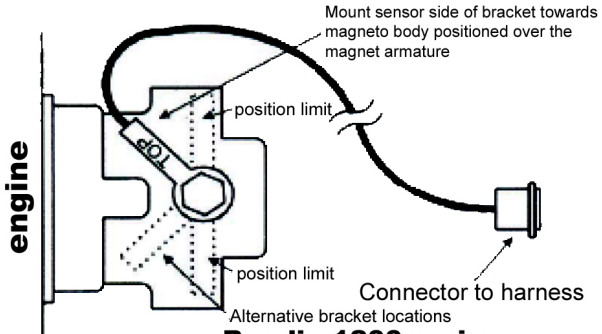

Bendix 1200 series
pressurized
JPI 420807

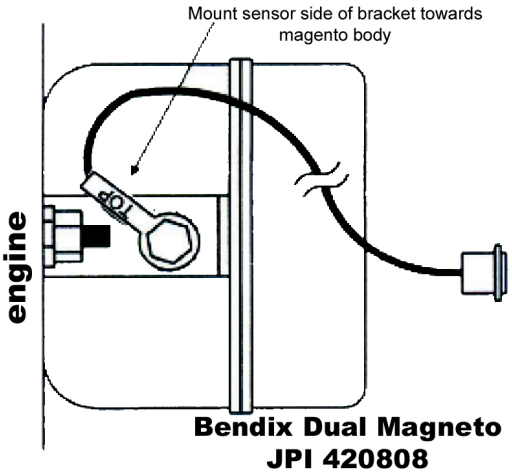

Bendix Dual Magneto
JPI 420808

Slick Magnetos

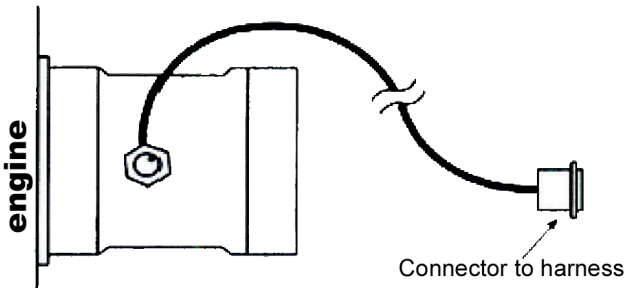

Slick 6000, 4000 series
non-pressurized
JPI 420815-1

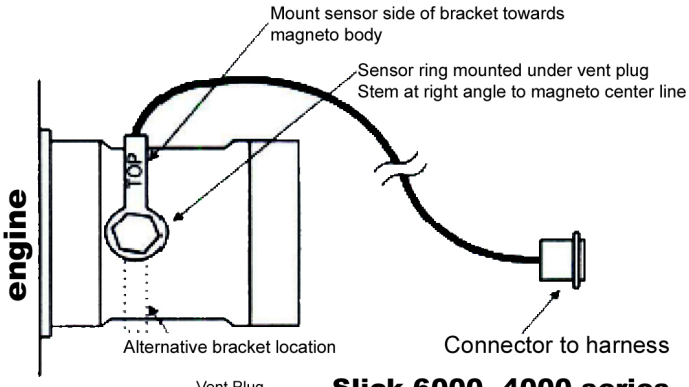

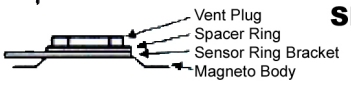

Slick 6000, 4000 series
pressurized
JPI 420809

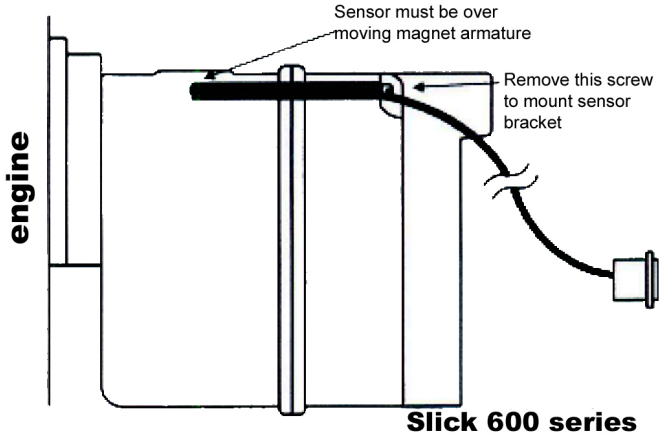

Slick 600 series
non-pressurized
JPI 420806

Also for Bendix Pressurized 20, 200, and S6LSC-25P

Factory set limits or default values for EDM-960

33. EDM-960 system Specifications and Limitations

The following parameters must be customized for the aircraft into which the EDM-960 system is installed.

1.	TIT 1650 F	TSO-C43
2.	CHT 450 F	TSO-C43
3.	Oil Temp Low 90 F	TSO-C43
4.	Oil Temp HI 230F	TSO-C43
5.	Oil Press low 15 psi	TSO-47
6.	Oil Press Hi 100 psi	TSO-47
7.	Vacuum 0- 15”hg	TSO-47
8.	RPM 2700 Limit and range	TSO-C49
9.	RPM set to cyl 6	TSO-C49
10.	Map 32 In hg HI	TSO-C45
11.	Map setting 29.90 In Hg	TSO-C45
12.	Fuel Pressure Hi 35 psi Injected	TSO-47
13.	Fuel Pressure Lo 15 psi Injected	TSO-47
14.	Fuel Pressure Hi 8 psi Carb	TSO-47
15.	Fuel Pressure Lo .5 psi Carb	TSO-47
16.	Fuel Flow 24 GPH	TSO-C44
17.	K-factor 29.99	
18.	Carburetor filter smoothing 1	
19.	Ammeter configuration (load or charge-discharge). Load	NON TSO
20.	HC-120 (% of HP)	NON TSO
21.	Fuel Level Resistive/Capacitive	TSO-55
22.	Low fuel 10 Gal	
23.	Low time 45 Min	
24.	Main tank 75 gallons	
25.	Aux tank 0	
26.	GPS set at GARMIN	
27.	Diff 500 degrees	TSO-C43
28.	CLD 60 degrees per minute	TSO-C43
29.	Amps limit 100 amps	NON TSO
30.	Record time, 6 sec intervals	NON TSO
31.	Tach Time based on cruise RPM setting of 2400 true	NON TSO

During start-up the EDM may reset (typical on 14 vdc systems). This is normal due to extremely low battery voltage due to starter amperage draw. The conditions and test required for TSO approval of this article are minimum performance standards. It is the responsibility of those desiring to install this article either on or within a specific type or class of aircraft to determine that the aircraft installation conditions are within the TSO standards. The article may be installed only if installation of the article is approved by the Administrator. The functions of Volts, Amps, and Horse Power were tested to DO-160D and DO-178B, but not TSO’d since no TSO exist for these functions. Deviation granted for TSO-C49b to include digital display and sensor. All TSO required probes, transmitters and sensors also tested to DO-160D.

34. EMI Radio Test:

Even through the EDM-960 has been tested to DO-160E Section 20 (EMI) the installation itself could create radio interference on specific frequencies. The following test is to insure that this does not exist.

EMI/RFI TESTS: perform tests, in accordance to the table below, to insure wire routing and connectivity has not compromised the signal integrity of the NAV/COM receivers. Power up the aircraft bus (or buses) in accordance with normal engine prestart procedures (see Aircraft Pilot Operating Handbook). Verify that the EDM-960 is operating normally. Set the frequency and audio panel to listen to that radio. Loud buzzing/humming is considered 'unusual noise' in the context of these tests also the OBS needle should not move. Should any EMI noise be found that is attributed to the EDM-960 system, it must be corrected by shielding and/or rerouting wiring to eliminate the noise. If unusual noise is heard, remove power from the EDM-960 system to check if it is the source of this noise. If the EDM-960 system is not the source of 'unusual noise' then mark the table with a 'PASS'.

Frequency	**NAV/COM 1 (PASS/FAIL)**	**NAV/COM 2 (PASS/FAIL)**	**Comments**
108.00			
112.00			
115.00			
117.00			
120.00			
121.00			
122.00			
123.00			
124.00			
125.00			
126.00			
127.00			
128.00			
129.00			
130.00			
132.00			

35. Component Parts List

	Twin engine				
	-4 Cyl	-6 Cyl	-7 Cyl	-8 Cyl	-9 Cyl
Display EDM-930 P/N 790000-C-120	1	1	1	1	1
DAU EDM-950 P/N 790000-B-(xxx)	2	2	2	2	2
EGT probe KIT PN 1280	8	12	14	16	18
TIT probe with option KIT 1200	2	2	2	2	2
CHT probe KIT PN 1260	8	12	14	16	18
OAT probe with option KIT 1220	1	1	1	1	1
IAT probe with option KIT 1300	2	2	2	2	2
Carb temp probe KIT 1190	2	2	2	2	2
Oil Temp probe with option KIT 1250 PN 400509	2	2	2	2	2
Oil pressure sender KIT 1170 PN 306018	2	2	2	2	2
Fuel pressure sender KIT 1450 PN 159935	2	2	2	2	2
Fuel pressure differential sender Kit 1480 PN 159938	2	2	2	2	2
Ammeter shunt PN 159920	2	2	2	2	2
Fuel Flow transducer PN 700900-1	2	2	2	2	2
Fuel Level sender option	2	2	2	2	2
MAP KIT 1340 PN 604010	2	2	2	2	2
RPM one of P/N 420815-1 or,-2	2	2	2	2	2
RAD P/N-790749	2	2	2	2	2

35.1 Component Parts List for EGT (KIT 1280), TIT (KIT 1200) Probe

1 Thermocouple type K probe PN M-111
1 Stainless Steel Clamp Thimble
1 Stainless Steel Exhaust Seal Washer
1 Stainless Steel Screw Type Clamp
2 Ring Terminals
2 Screws and nuts 6-32 X 1/4
1 Fiberglass tube 3/8” x 5”

35.2 Component Parts *list for CHT KIT 1260*

1 Bayonet Probe Thermocouple type K Spring loaded PN 5050
1 Or Gasket thermocouple probe type K PN MM-113
2 Ring Terminals
2 Screws and Nuts 6-32 X 1/4"
1 Fiberglass tube 3/8” x 5”

35.3 Component Parts list for OAT (PN 1220) probe

1 P/N 400510, OAT probe
2 Ring Terminals
2 Screws and Nuts 6-32 X1/4"
Fiberglass tube 3/8” x 5”

35.4 Component Parts list for IAT (PN 1140) probe

1 Thermocouple type K probe PN M-111
1 Stainless Steel Clamp &Thimble
1 Stainless Steel Exhaust Seal Washer

Component Parts list for CARB (KIT 1190) probe

1 P/N 400128, CARB probe
2 Ring Terminals
2 Screws and Nuts 6-32 X1/4"
1 Fiberglass tube 3/8” x 5”

35.5 Component Parts list for *OIL Temperature probe (KIT 1250)*

1 P/N 400509 OIL probe
1 AN900-10 crush washer
2 Ring Terminals
2 Screws and Nuts 6-32 X 1/4"
1 Fiberglass tube 3/8” x 5”

35.6 **Component Parts list for Oil Pressure sensor KIT 1170**

1 P/N 306018 Oil Pressure sensor
1 P/N 159964 Clamp, Loop Cushioned
2 Ring Terminals

35.7 Component Parts list for Fuel Pressure Sensor KIT 1450 (only if required by POH)

1 P/N 159935 Fuel pressure sensor
1 P/N 159961 Clamp, Loop Cushioned
1 P/N 174402 Connector Pack 3 Pin and Terminals

35.8 Component Parts list for *Kit 1480 Differential Fuel Pressure (only if required by POH)*

1 P/N 159938 Fuel pressure sensor
1 P/N 159961 Clamp, Loop Cushioned
1 P/N 174204 Connector MS 3116F8-4S

35.9 Component Parts list for Kit 1300 ampere shunt

1 P/N 159920 100 amp shunt
2 Ring Terminals

35.10 Component Parts list for Fuel Flow Transducer

1 fuel flow transducer, 201 or 231 PN 700900-1,-2
8 inches of 1.5” dia. fire sleeve
1 3-pin connector housing
3 female pins
2 AN816-4-4 fittings (Continental) or AN816-4-6 (Lycoming)

35.11 **Component Parts list for MAP sensor KIT 1340**

1 P/N 604010 Manifold pressure sensor

35.12 Components Parts list for pressurized RPM sensor

Slick 6000……..….P/N 420809
Bendix magneto 20, slick 600……P/N 420806
Bendix Dual ……P/N 420808
Bendix 1200……P/N 420807

35.13 Components Parts list for RPM sensor P/N depends on Magneto make and model

Bendix magneto -20,120……..P/N 420815-2
Slick magneto 4000 or 6000……P/N 420815-1
Bendix dual ……...P/N 420808

36. Weight and Balance Data

DAU PN 790000-B EDM-950	1.8 Lbs
Indicator PN 790000-C-120, EDM-930 incl. 2 RADs	2.0 Lbs
EGT / TIT / CDT / IAT / OAT probe	2.0 oz. each / 0.125 lbs
CHT / Oil Temperature probe	1.5 oz. each / 0.094 lbs
4/6 Cylinder Harness 8 ft.	14.0 oz. each / 0.88 lbs
RPM and MAP	5.0 oz / 0.42 lbs
Fuel Pressure Sender	5.0 oz / 0.42 lbs
Oil Pressure Sender	5.0 oz / 0.42 lbs
Harness each	1.0 Lbs

37. Pilot Programming

Refer to the Pilots Guide for specific Pilot Programming details. Basically to start the Pilot Program procedure, simultaneously hold the STEP and LF buttons for five seconds. You will see the word PROGRAM for two seconds and then the example sequence shown in the chart below.

Tap the STEP button to advance to the next item in the list. Hold the STEP button to step back to the previous item. Tap the LF button to select alternate values of that item. Simultaneously hold both STEP and LF to exit.

STEP *advances next item*	LF *sequences through these values*	*Comments*
PROGRAM		*Stays on for two seconds.*
FUEL N	FILL? N	Tap LF to change fuel status. Exits program mode when done.
RATE 4	0 … 9	Index rate (pause time in seconds) in the Automatic Mode. 0 disables the Automatic Mode.
OAT F	OAT F ⇔ OAT C	To calibrate the OAT ±10°, hold both the STEP and LF buttons simultaneously for five seconds, which will proceed to the next step. Otherwise the next step will be skipped.
OAT+0	OAT-I0 … OAT+I0	This step will be normally be skipped. Adjust the indicated temperature up or down by up to 10°. For example, OAT+3 adjust the OAT 3° higher.
EGT I?N	EGT I?N ⇔ EGT ICY	Y—Yes—sets the digital display to one-degree resolution; N—No—sets 10°. (10° resolution is easier to interpret the Get's.)

HIP I25	70 HP HIP= I25	%HP display will change when HP constant is adjusted. Hold STEP and LF for 5 seconds until you see ADJUST to set the HP calibration. Tap STEP to continue to the next step. See page 26✍ To adjust the MAP, hold both the STEP and LF buttons simultaneously for five seconds, which will proceed to the next step. Otherwise the next step will be skipped.
MAP 29.9	MAP 20 ✍ 32	Adjust the MAP. See page **Error! Bookmark not defined.**✍
KF 29.90		Adjust the instrument's K-factor to match the fuel flow transducer K-factor. See page 34✍
TR IP? N	TR IP? N ⇔ TR IP? Y	N—No—Upon informing the EDM that you refueled the aircraft, reset total fuel used to 0. Y—Yes—accumulate total fuel used rather than reset to 0 at each refueling. See page 34✍
HOBS VAL	2424 ENG⇔ 25 EDM⇔ 3567 FRM	Displays the engine hours and airframe hours.
END? Y	END? Y	STEP exits the pilot programming mode. LF reenters pilot programming mode.

37.1.1 Programming the Horsepower Constant

You must adjust the HP Constant once for your aircraft. You must perform this adjustment in the air while the aircraft is in flight between 5,000 and 8,000 feet MSL.

1. Enter the pilot program mode by simultaneously holding the STEP and LF buttons for five seconds.
2. Tap STEP repeatedly until you see—for example— HP = I25. Then hold both the STEP and LF buttons display until you see ADJUST, followed by HP = I25. The adjustment range for the HP Constant is 45 to 180.
3. Set the MP and RPM per your POH to 70 percent power. Let conditions stabilize.
4. Change the HP reading on the EDM-960 to 70 percent by adjusting the HP constant in the lower display by holding or tapping the LF button. Percent HP should be close to 100 percent during takeoff at sea level or you can set it at take-off,100 ft. into the roll.
5. Tap the STEP button to proceed to the next step.

Fine tuning the MAP gauge

Sets the manifold pressure calibration.

You may need to correct the MAP based on the altimeter setting at a sea level airport.

1. Enter the pilot program mode by simultaneously holding the Step and LF buttons for five seconds.
2. Tap Step/OK repeatedly until you see —for example— HP Constant=125. Then hold both the first two buttons Step/OK and Change buttons display until you see Adjust, followed by HP Constant=125.
3. Again, Hold both the two buttons, Step/OK and Change buttons display until you see ADJUST, followed by MAP+0. The adjustment range for the MAP is ±2.0 in Hg. As you adjust the MAP up or down you will see a change in the MAP gage under RPM. When you see the correct setting stop.
4. Tap the Step/OK button to proceed to the next step or hold both buttons again to exit setup.

Do this one time and only if the MAP on your manifold pressure gauge doesn't match the MAP shown on the EDM-960 You must do this on the ground with the engine turned off.

37.1.2 K factor

The K factor is shown on the fuel flow transducer as a four-digit number, which is the number of pulses generated per gallon of fuel flow. Before installing the transducer, write down the K factor here _____. To enter the number, move the decimal point three places to the left. For example if the K factor on the fuel flow transducer is 29,123, enter 29.12 in the K factor parameter.

If the K factor is increased, the indicated fuel flow will decrease, and vice-versa. When the K factor is changed during a trip, calculations of fuel used, fuel remaining and time to empty are not retroactively recalculated.

37.1.2.1.1 Fine Tuning the K factor

Aircraft installation will affect K factor. Because of this you should 'fine-tune' the K-factor, for your aircraft, as described below:

1. Fill each aircraft tank that each engine will run from (note: engine return lines must return the fuel to each respective tank). 'Refuel' EDM, noting that 'USED' resets to zero for each engine.

2. Fly aircraft for 2 to 3 hours. Immediately after engine shutdown, record EDM 'USED' parameter for each engine in chart below.

3. Refill each tank and record ACTUAL USED for each tank in the in chart below.

	EDM 'USED'		ACTUAL USED	
Flight	Left Engine USED	Right Engine USED	Left Engine Tank	Right Engine Tank
A				
B				
C				
Totals	✍	✍	✍	✍

4. Total ✍ the EDM calculated fuel 'USED' and ✍ the actual fuel used for each engine.
5. Record the current K factor here ✍_____ and in the table below.
6. Calculate the Adjustment ratio:

   Adjustment ratio = (✍ _____ / ✍ _____) - 1 2

7. New K Factor = ✍ x (Adjustment ratio +1).

Record the values here: **Left Engine**

Date	*✍EDM fuel used*	*✍actual fuel used*	*✍Current K factor*	*New K factor*	*Pilot's initials*

Date	*✍EDM fuel used*	*✍actual fuel used*	*✍Current K factor*	*New K factor*	*Pilot's initials*

IMPORTANT: after adjusting K factors you must apply a correction factor to the EDM indicated fuel USED and indicated fuel REMaining, accordingly. We recommend you top the tanks and 'Refuel' the EDM to eliminate this requirement.

38. Programming the K factor

This procedure is different than for setting other parameters.

1. If you haven't already done so, start the Pilot Program procedure; by simultaneously hold the STEP and LF buttons for five seconds. You will see the word PROGRAM, followed by FUEL N.
2. Tap STEP button to advance to the K-Factor 1 29.90 (for example)
3. Hold both the STEP and LF buttons simultaneously for five seconds. The first digit flashes (shown here as a larger digit only for illustration purposes): 29.90
4. TAP the button labeled "PLUS" to go up in value and TAP the button labeled "MINUS" to go down in value.
5. Tap STEP button (labeled DIGIT) for next digit and repeat the previous step: 29.90
6. Repeat items 6 and 7 for the remaining two digits.
7. Hold STEP and LF (buttons 1&2) simultaneously for five seconds to exit the K factor parameter setup.
8. Tap STEP repeatedly until you see END?, then Tap "YES" to get out of the program mode.

39. Trouble Shooting

1. A missing column in the display upon start up indicates the continuity check diagnostic routine has found an open line or probe with no connection. An error message will indicate which cylinder to look at.
2. A missing column in the display during flight indicates a reading that is jumping around or incorrect. The probe is removed from the line up to prevent false alarms.
3. A negative reading (-) in front of the number indicates reverse polarity on the red/yellow wire to probe.
4. Using an ohmmeter or continuity checker measure across the probe output leads. A good probe should be around 2- ohms and at the connector to the probe around 20 ohms.
5. Erroneous or erratic readings on one cylinder reading. Swap the suspected probe with a probe from a good cylinder. If the problem goes to the good cylinder the probe should be replaced. If the problem remains the same, it is in the Thermocouple hook-up wiring from the probe to the instrument or it can be in the ring terminals crimped to the wire. Remember to double back on the wire going into the ring terminal.
6. EGT, large span. Normally aspirated (carburetor) engines at normal cruise display a “DIFF” of 125 to 175 ^{o}F spread between cylinders. Injected engines at normal cruise display a “DIFF” 50 to 90 ^{o}F spread between cylinders. All cylinders are measured by a common circuitry. It is almost impossible not to have identical calibration on all channels.
7. If the temperature reading is changing more than 500°F in one second it should be questioned and a loose wire crimp or probe should be suspected. A malfunctioning probe will automatically be removed from the scan.
8. All EGT or CHT readings seem to high, low or unsteady. Use a DVM (digital voltmeter) to measure the difference between 950 ground and the engine block ground. If the difference is greater than 0.5 volts with the alternator charging. Then remove the EDM-960 ground (Black wire) from the instrument panel and connect it directly to the ENGINE BLOCK for GROUND.
9. OAT readings off by 25 degrees, but oil and CHT readings OK, look for *copper wire spliced* in line to OAT probe. OAT reading can be fine tuned +/- 5 degrees, see reset procedure. Engine heat could also be the cause.
10. The instrument configures itself automatically for 14 or 28 volt electrical systems.

40. Connector Pin Assignments (EDM-950) DAU, J1 through J5

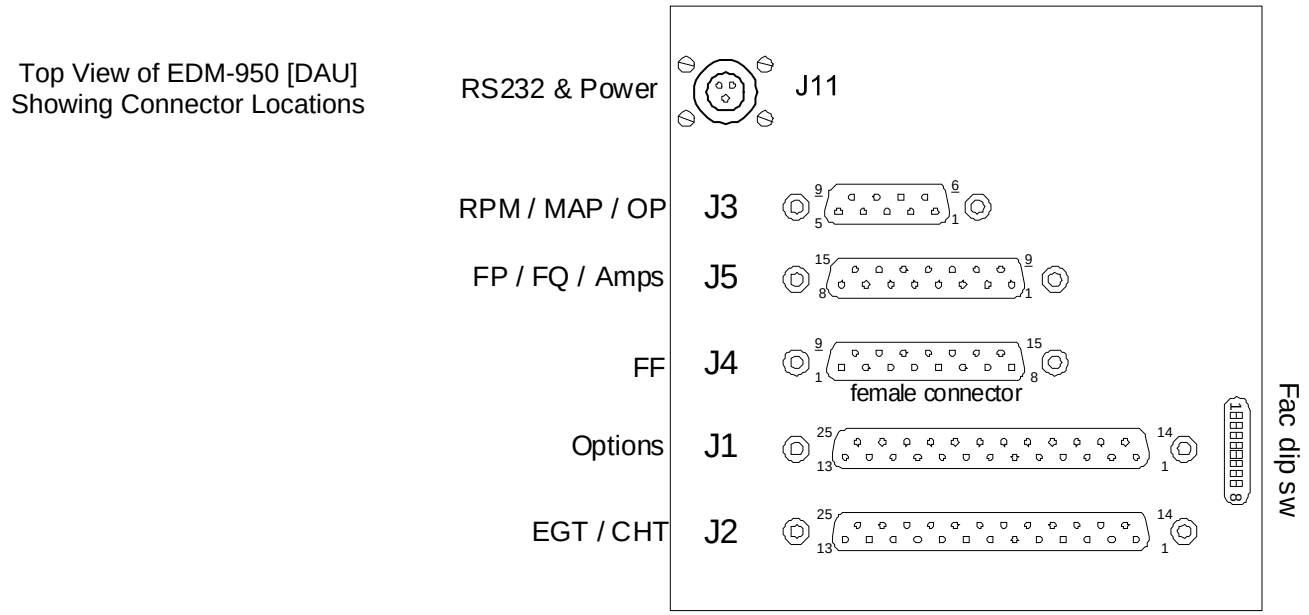

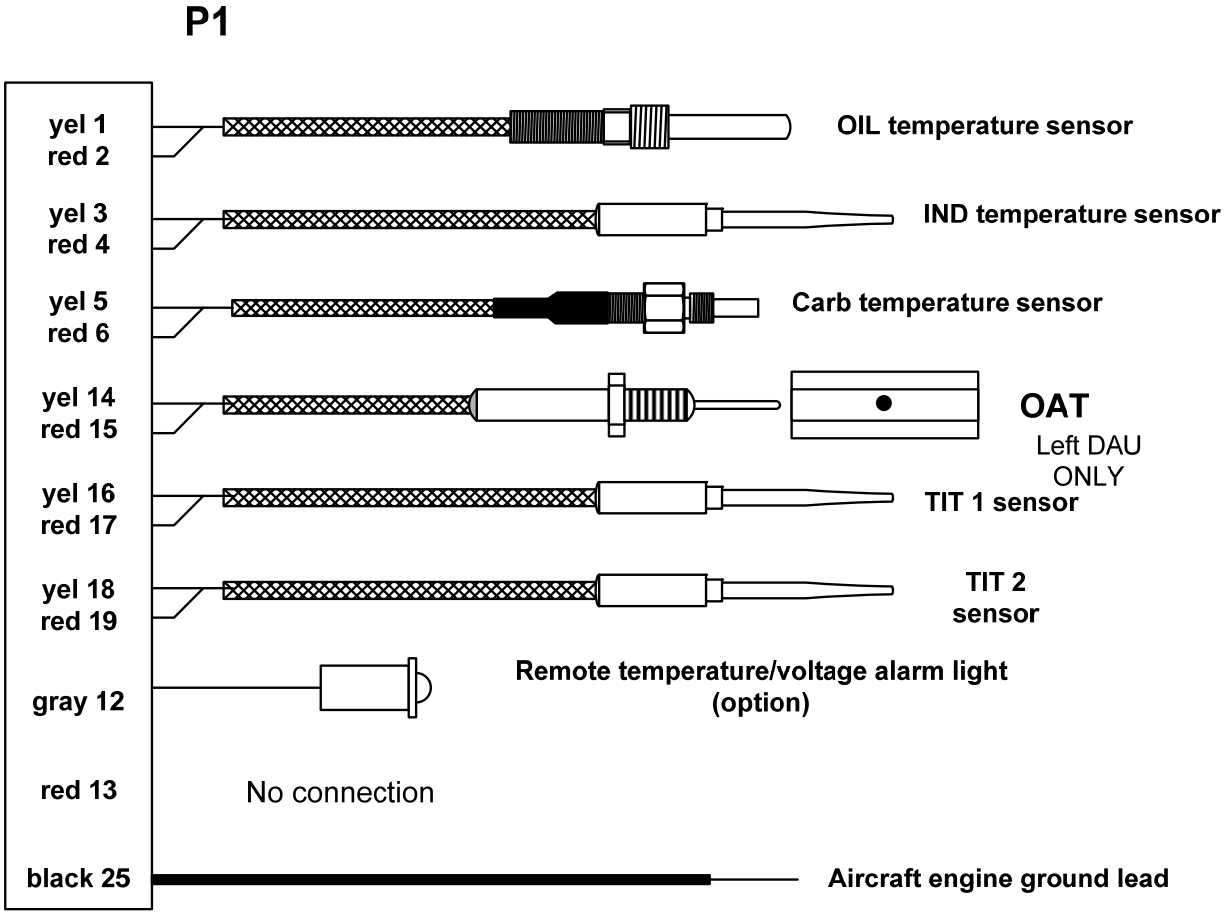

J1 FOR 7, 8, and 9 cylinder installations

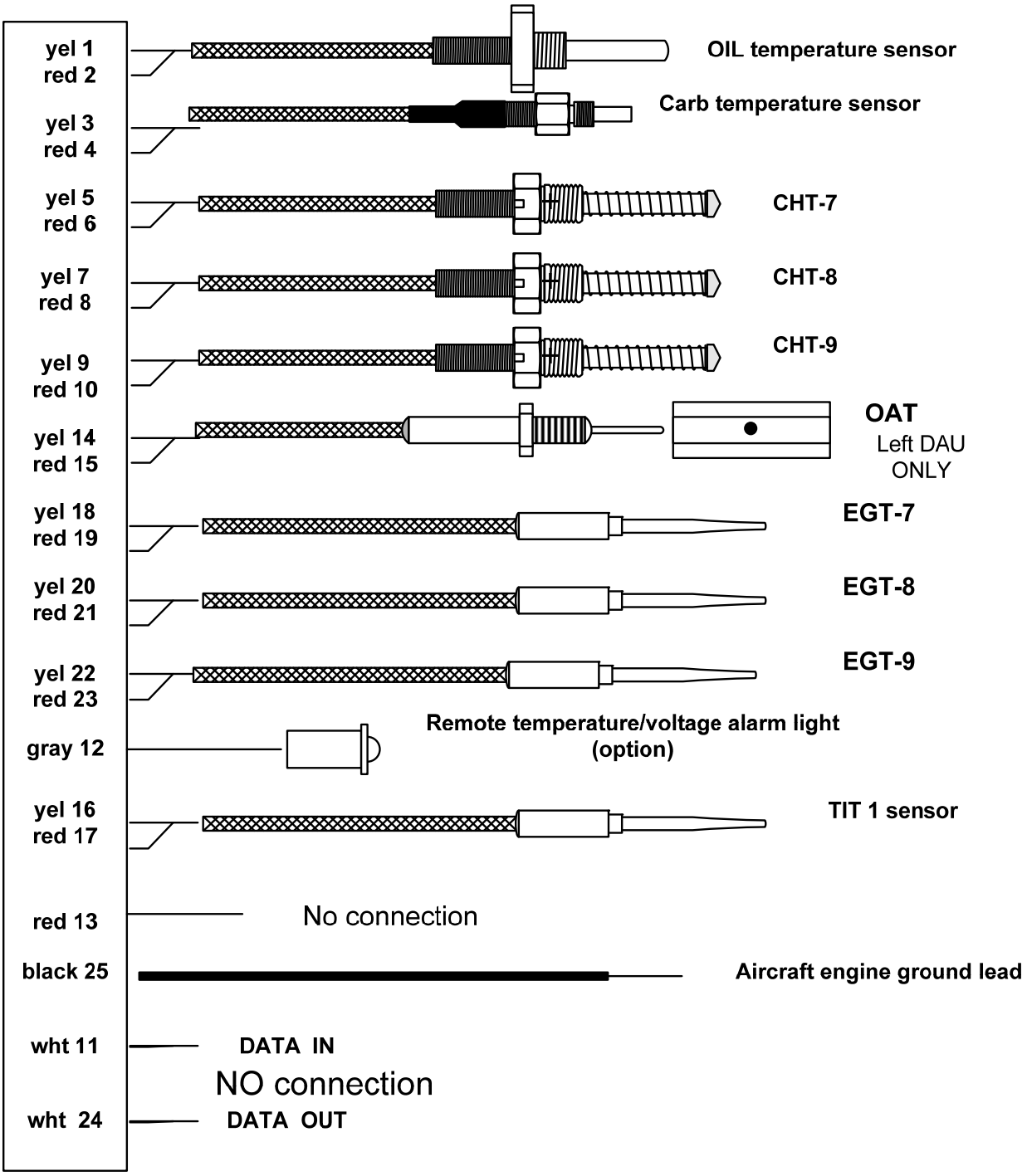

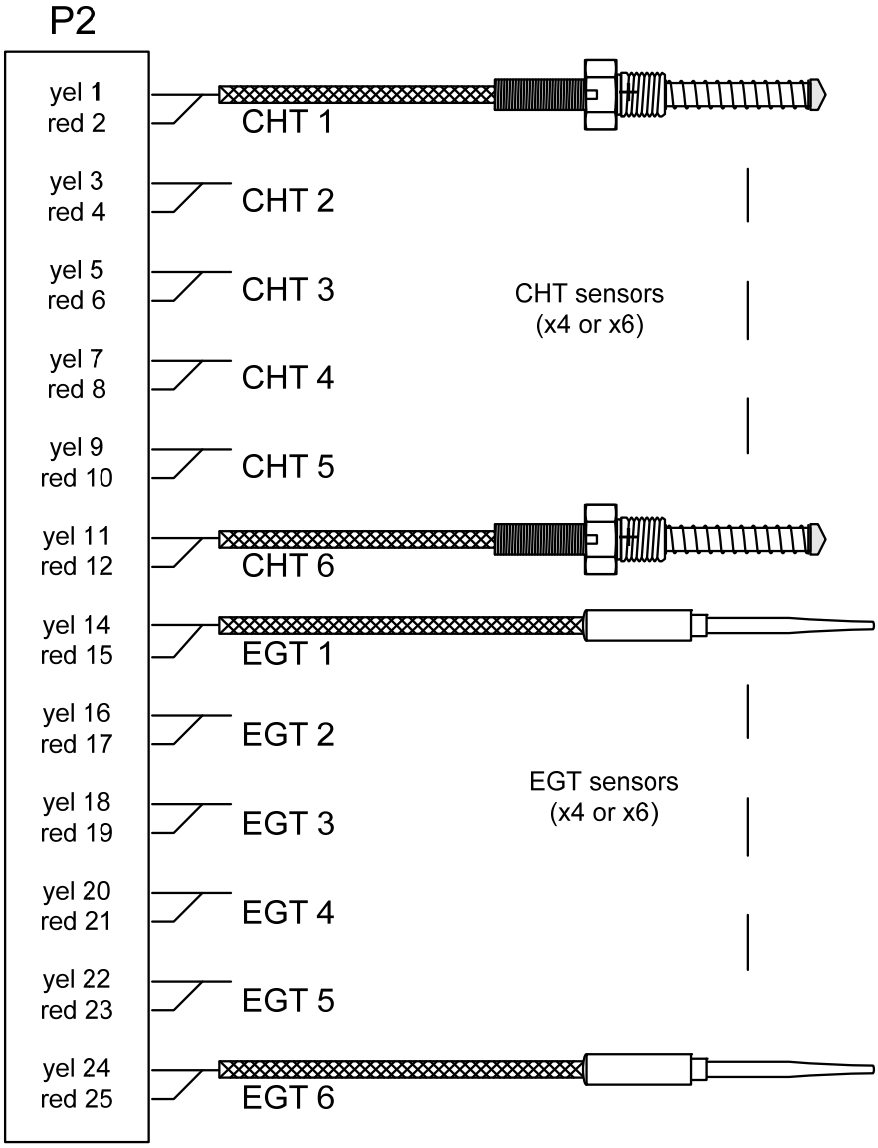
P2
yel 1
red 2
CHT 1
yel 3
red 4
CHT 2
yel 5
red 6
CHT 3
CHT sensors
(x4 or x6)
yel 7
red 8
CHT 4
yel 9
red 10
CHT 5
yel 11
red 12
CHT 6
yel 14
red 15
EGT 1
yel 16
red 17
EGT 2
EGT sensors
(x4 or x6)
yel 18
red 19
EGT 3
yel 20
red 21
EGT 4
yel 22
red 23
EGT 5
yel 24
red 25
EGT 6

J3 Oil-P, MAP, RPM

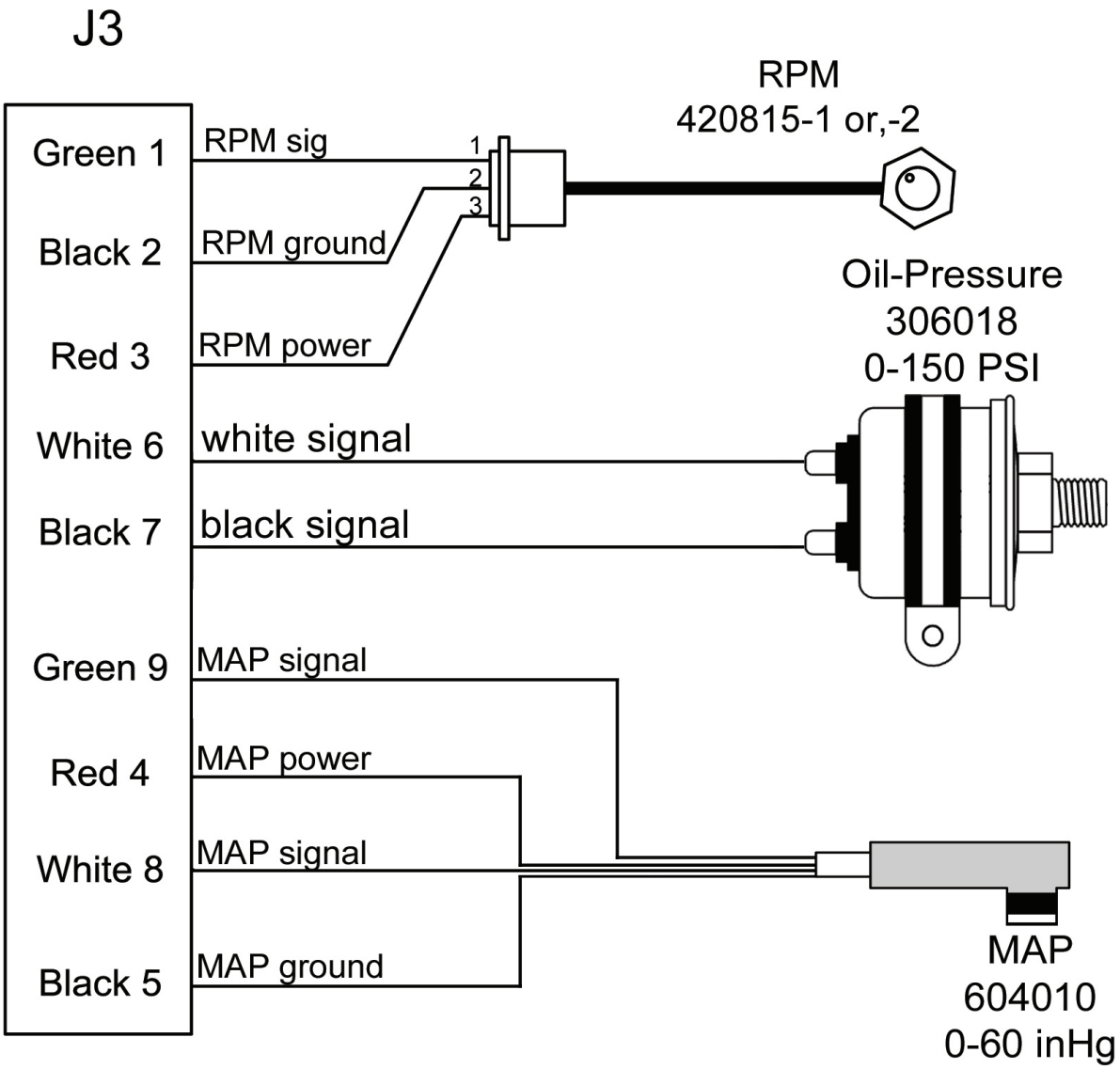

J4 (FF, AMP 2)

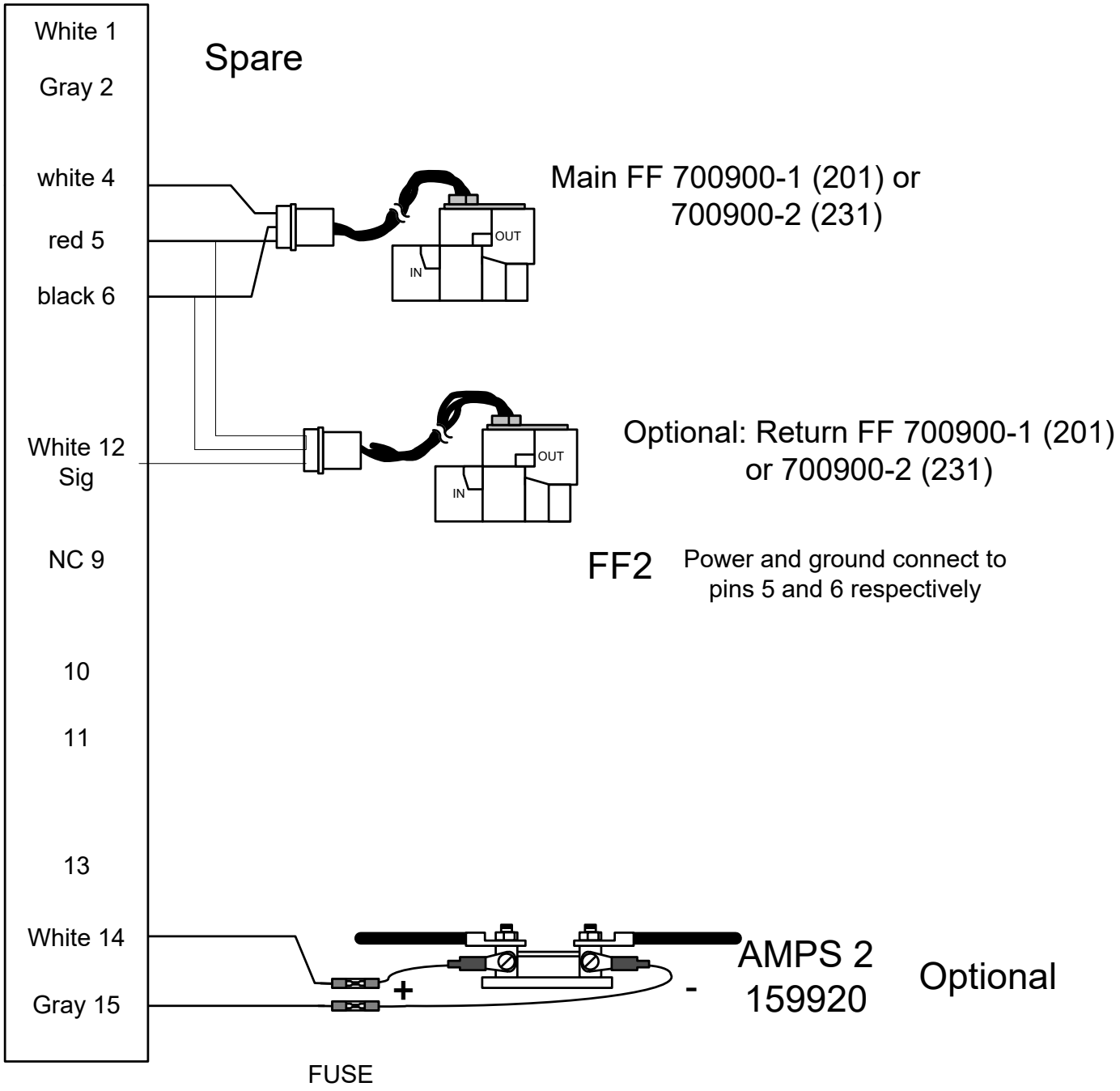
White 1
Gray 2
Spare
white 4
red 5
black 6
Main FF 700900-1 (201) or
700900-2 (231)
OUT
IN
White 12
Sig
Optional: Return FF 700900-1 (201)
or 700900-2 (231)
OUT
IN
NC 9
FF2
Power and ground connect to
pins 5 and 6 respectively
10
11
13
White 14
Gray 15
+
-
AMPS 2
159920
Optional
FUSE

J5 PN 790723 (Tanks, Fuel Press, Amps) for one DAU

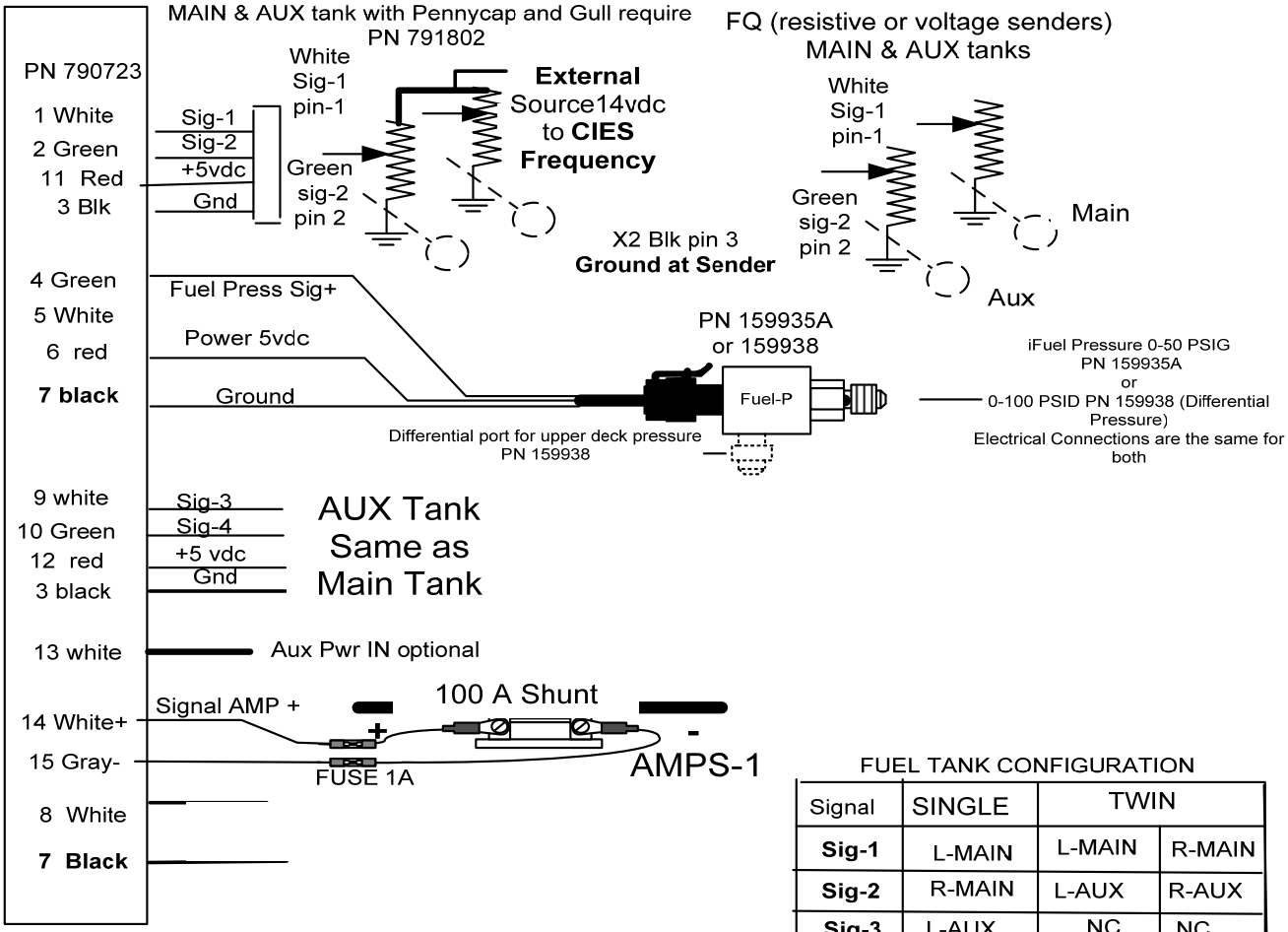

FUEL TANK CONFIGURATION

Signal	SINGLE	TWIN	
Sig-1	L-MAIN	L-MAIN	R-MAIN
Sig-2	R-MAIN	L-AUX	R-AUX
Sig-3	L-AUX	NC	NC
Sig-4	R-AUX	NC	NC

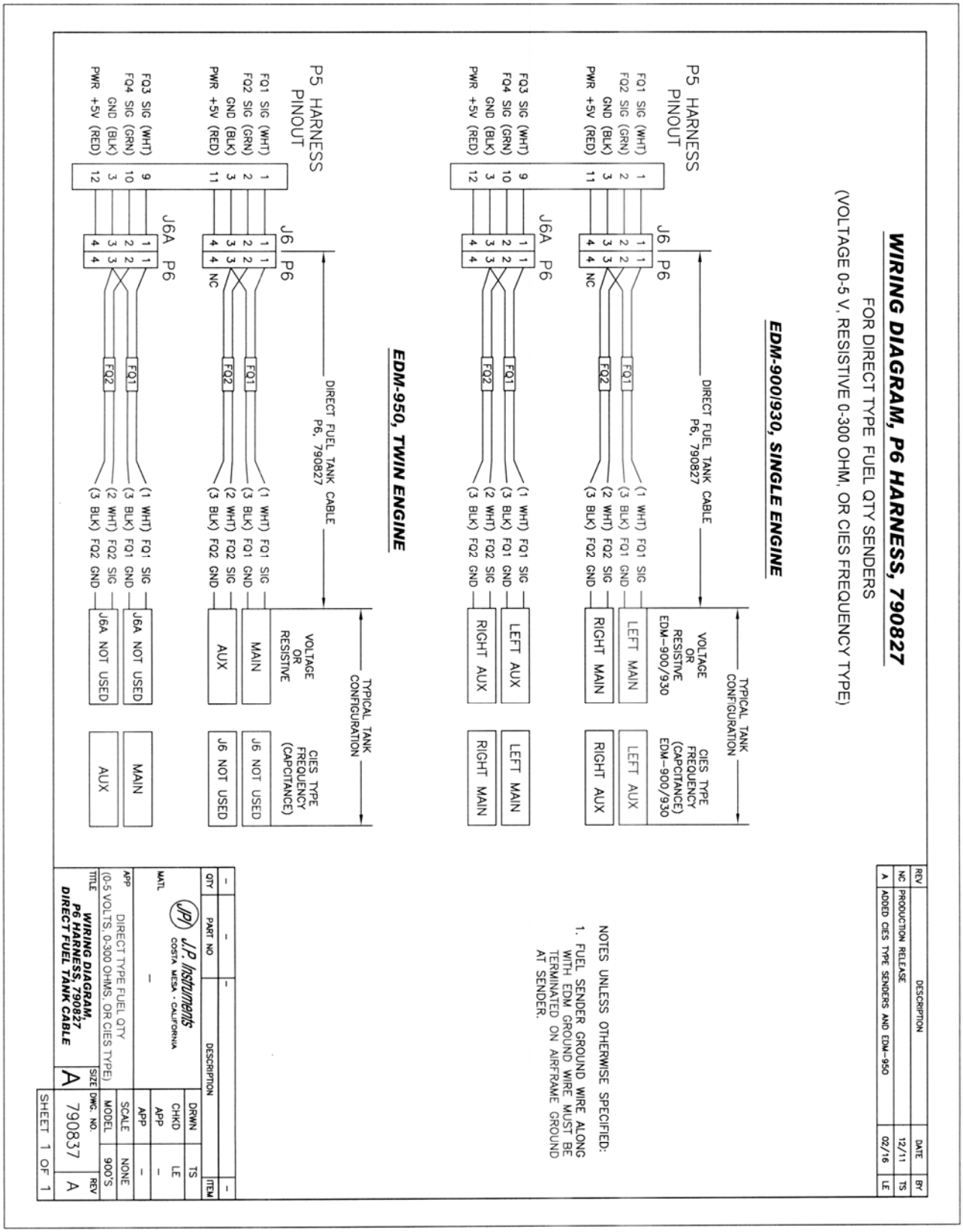
WIRING DIAGRAM, P6 HARNESS, 790827
FOR DIRECT TYPE FUEL QTY SENDERS
(VOLTAGE 0-5 V, RESISTIVE 0-300 OHM, OR CIES FREQUENCY TYPE)
EDM-900/930, SINGLE ENGINE
P5 HARNESS PINOUT
FQ1 SIG (WHT) 1
FQ2 SIG (GRN) 2
GND (BLK) 3
PWR +5V (RED) 11
J6 P6
4 4 NC
DIRECT FUEL TANK CABLE P6, 790827
(1 WHT) FQ1 SIG
(3 BLK) FQ1 GND
(2 WHT) FQ2 SIG
(3 BLK) FQ2 GND
TYPICAL TANK CONFIGURATION
VOLTAGE OR RESISTIVE EDM-900/930
CIES TYPE FREQUENCY (CAPCITANCE) EDM-900/930
LEFT MAIN
LEFT AUX
RIGHT MAIN
RIGHT AUX
FQ3 SIG (WHT) 9
FQ4 SIG (GRN) 10
GND (BLK) 3
PWR +5V (RED) 12
J6A P6
FQ1
FQ2
LEFT AUX
LEFT MAIN
RIGHT AUX
RIGHT MAIN
EDM-950, TWIN ENGINE
P5 HARNESS PINOUT
FQ1 SIG (WHT) 1
FQ2 SIG (GRN) 2
GND (BLK) 3
PWR +5V (RED) 11
J6 P6
4 4 NC
DIRECT FUEL TANK CABLE P6, 790827
(1 WHT) FQ1 SIG
(3 BLK) FQ1 GND
(2 WHT) FQ2 SIG
(3 BLK) FQ2 GND
TYPICAL TANK CONFIGURATION
VOLTAGE OR RESISTIVE
CIES TYPE FREQUENCY (CAPCITANCE)
MAIN
J6 NOT USED
AUX
J6 NOT USED
FQ3 SIG (WHT) 9
FQ4 SIG (GRN) 10
GND (BLK) 3
PWR +5V (RED) 12
J6A P6
FQ1
FQ2
J6A NOT USED
MAIN
J6A NOT USED
AUX
NOTES UNLESS OTHERWISE SPECIFIED:
1. FUEL SENDER GROUND WIRE ALONG WITH EDM GROUND WIRE MUST BE TERMINATED ON AIRFRAME GROUND AT SENDER.
REV
DESCRIPTION
DATE
BY
NC PRODUCTION RELEASE 12/11 TS
A ADDED CIES TYPE SENDERS AND EDM-950 02/16 LE
QTY
PART NO
DESCRIPTION
ITEM
J.P. Instruments
COSTA MESA · CALIFORNIA
MATL
APP
DIRECT TYPE FUEL QTY
(0-5 VOLTS, 0-300 OHMS, OR CIES TYPE)
TITLE
WIRING DIAGRAM, P6 HARNESS, 790827 DIRECT FUEL TANK CABLE
DRWN TS
CHKD LE
APP
SCALE NONE
MODEL 900'S
SIZE A
DWG. NO. 790837
REV A
SHEET 1 OF 1

41. P8 Harness Display PN 790807

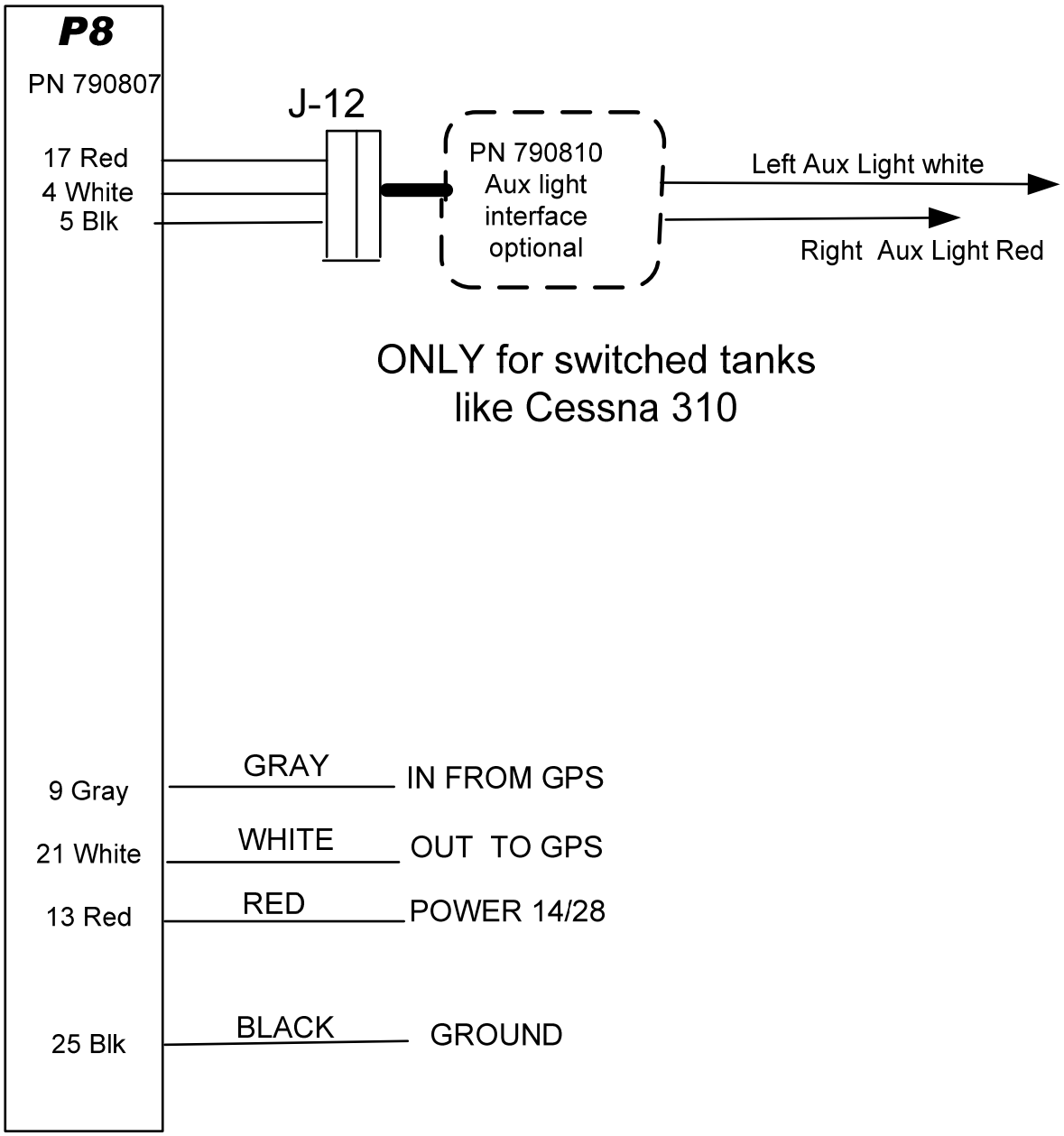

Overall Installation Wiring Diagram

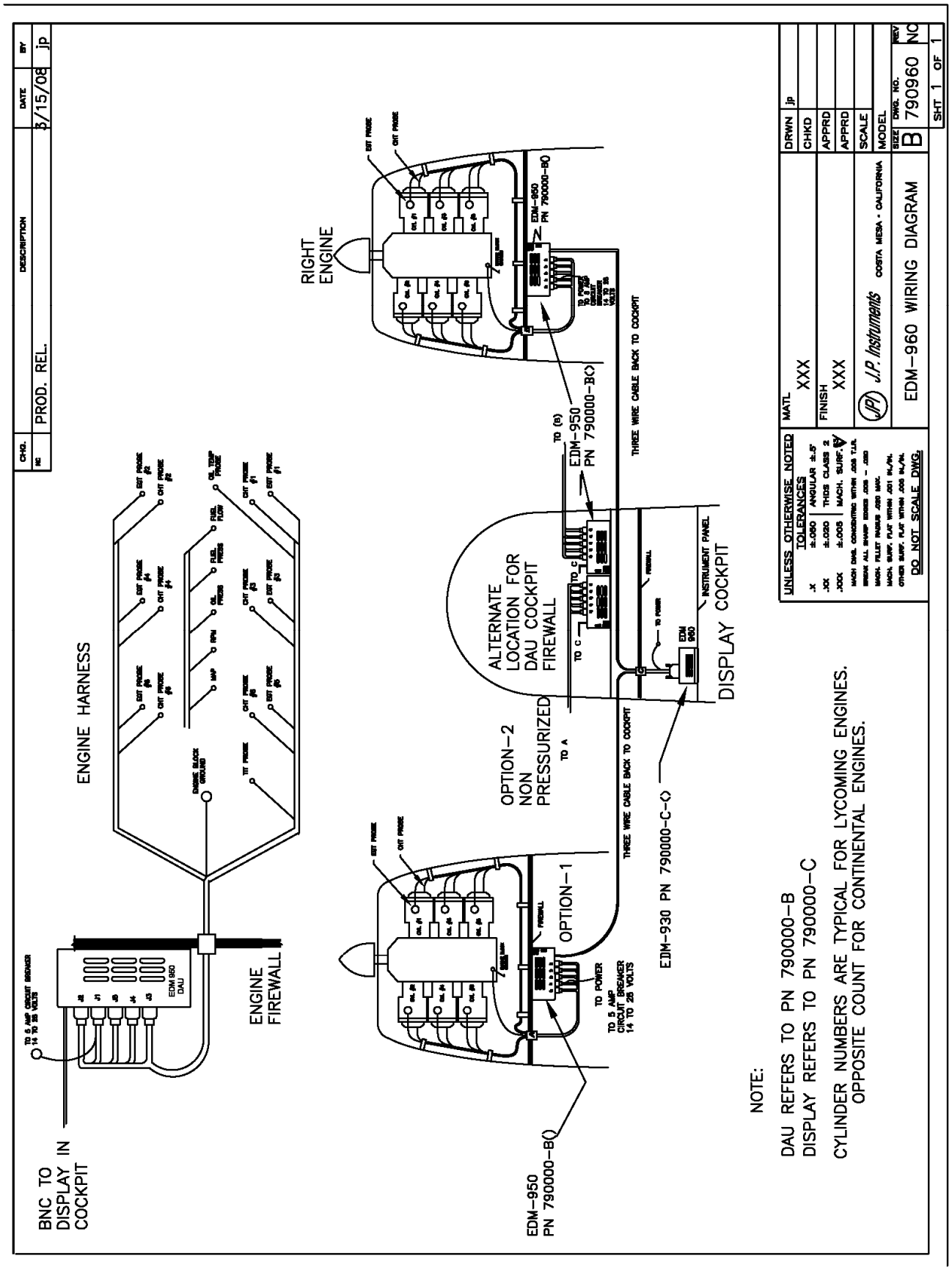

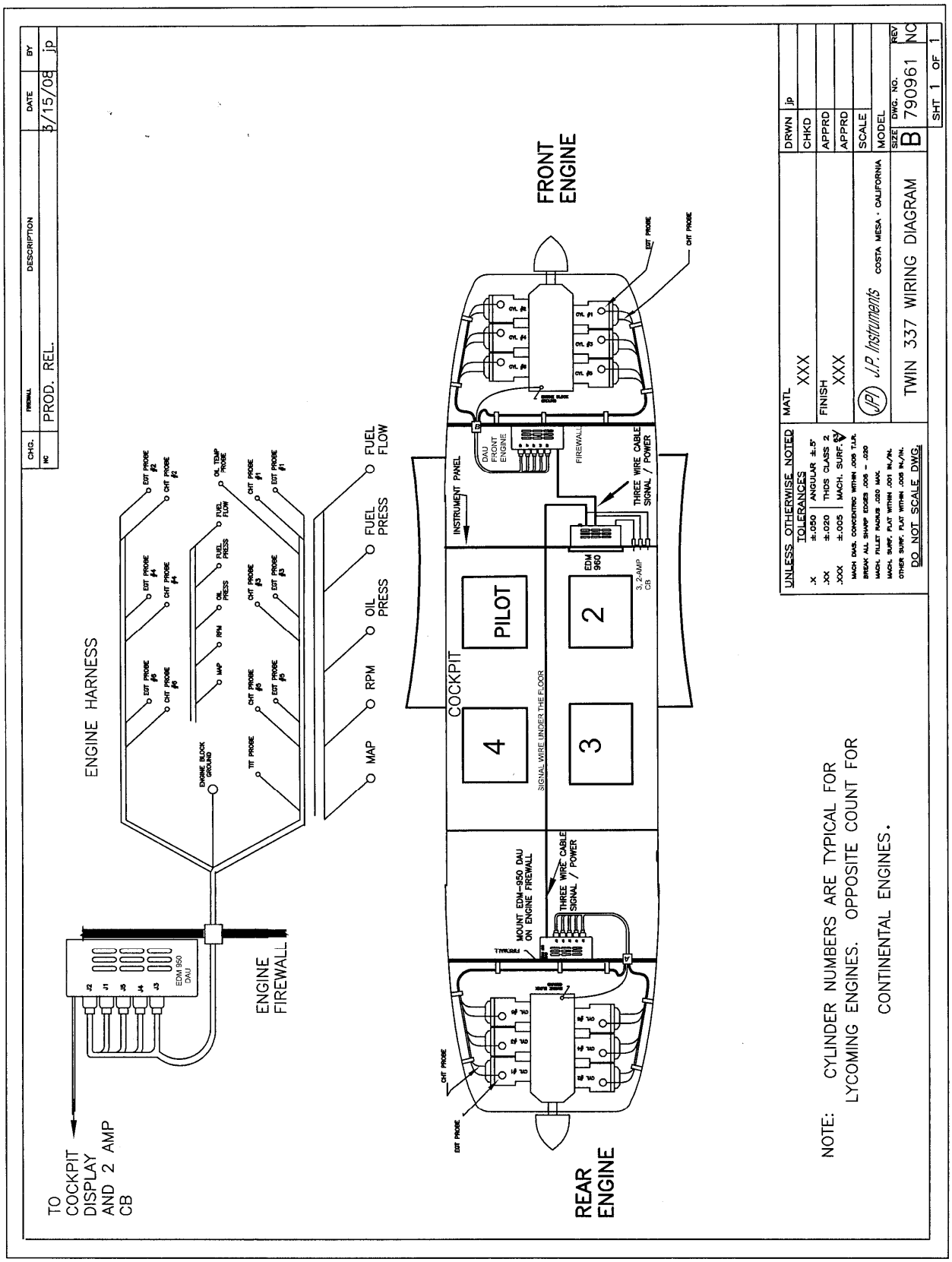
CHG.
NO
DESCRIPTION
DATE
BY
PROD. REL.
3/15/08
jp
ENGINE HARNESS
EGT PROBE #2
CHT PROBE #2
EGT PROBE #4
CHT PROBE #4
EGT PROBE #6
CHT PROBE #6
ENGINE BLOCK GROUND
OIL TEMP PROBE
FUEL FLOW
FUEL PRESS
OIL PRESS
RPM
MAP
TIT PROBE
CHT PROBE #1
EGT PROBE #1
CHT PROBE #3
EGT PROBE #3
CHT PROBE #5
EGT PROBE #5
EDM 960 DAU
J2
J1
J5
J4
J3
ENGINE FIREWALL
TO COCKPIT DISPLAY AND 2 AMP CB
FRONT ENGINE
REAR ENGINE
EGT PROBE
CHT PROBE
DAU FRONT ENGINE
FIREWALL
INSTRUMENT PANEL
THREE WIRE CABLE SIGNAL / POWER
EDM 960
3, 2-AMP CB
COCKPIT
PILOT
2
4
3
SIGNAL WIRE UNDER THE FLOOR
MOUNT EDM-960 DAU ON ENGINE FIREWALL
NOTE: CYLINDER NUMBERS ARE TYPICAL FOR LYCOMING ENGINES. OPPOSITE COUNT FOR CONTINENTAL ENGINES.
UNLESS OTHERWISE NOTED
TOLERANCES
.X ±.050 ANGULAR ±.5°
.XX ±.020 THDS CLASS 2
.XXX ±.005 MACH. SURF. 63
BREAK ALL SHARP EDGES .005 - .020
MACH. FILLET RADIUS .020 MAX.
MACH. SURF. FLAT WITHIN .001 IN./IN.
OTHER SURF. FLAT WITHIN .005 IN./IN.
DO NOT SCALE DWG.
MATL XXX
FINISH XXX
J.P. Instruments
COSTA MESA · CALIFORNIA
TWIN 337 WIRING DIAGRAM
DRWN jp
CHKD
APPRD
APPRD
SCALE
MODEL
SIZE B
DWG. NO. 790961
REV NC
SHT 1 OF 1

42. Interconnection between Display, DAU's and GPS

The DAU's must be interfaced to the panel mounted Display. For certain aircraft the Display must be interfaced to the aircraft's fuel gauge system switches and signal conditioners.

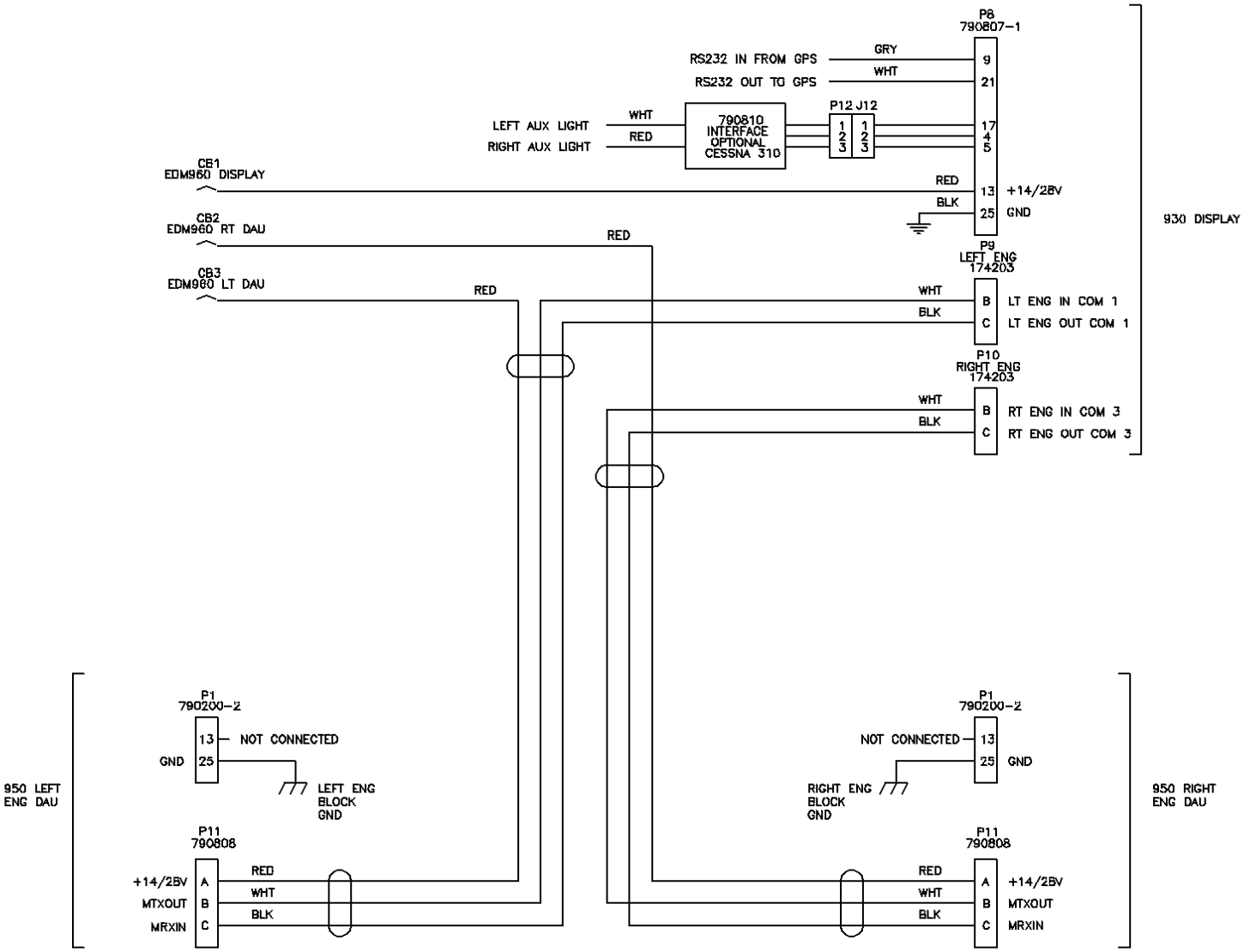

Note: P11 is the pre-wired Canon plug on the harness. P9 and P10 are installer wired.

43. Instructions for Continued Airworthiness (ICA)

Refer to:

Supplement No: 960-01

Revision: A or later

Check the web page, jpinstruments.com for the latest revision to the ICA