9800 Martel Road

Lenoir City, TN 37772

www.ps-engineering.com

PAR200B

With IntelliAudio®

Including Trig Avionics TY91 (L)

Document P/N 200-228-0300

Revision 5, August 2024

Audio Selector Panel with VHF Communications Transceiver and
High-fidelity Stereo Intercom

System Installation and Operation Manual

Patented under one or more of the following;

No. 4,941,187; 5,903,227; 6,160,496, and 6,493,450

FAA-TSO C139, TSO C169a (PARTIAL)
EASA ETSO C139, 2C169A (PARTIAL)

The product warranty is not valid unless this product is installed by an Authorized PS Engineering dealer or is a direct replacement for a compatible audio panel.

PS Engineering, Inc. 2024 ©

Copyright Notice

Any reproduction or retransmittal of this publication, or any portion thereof, without the expressed written permission of PS Engineering, Inc. is strictly prohibited. For further information, contact the Publications Manager at PS Engineering, Inc., 9800 Martel Road, Lenoir City, TN 37772. Phone (865) 988-9800, email contact@ps-engineering.com.

Table of Contents

Section I – GENERAL INFORMATION 1-1

1.1 INTRODUCTION 1-1
1.2 SCOPE 1-1
1.3 EQUIPMENT DESCRIPTION 1-1
1.4 APPROVAL BASIS — FAA TSO, EASA ETSO 1-2
1.1.1 PAR200B 1-2
1.1.2 TRIG TY91-SERIES: 1-2
1.5 SPECIFICATIONS 1-2
1.6 EQUIPMENT SUPPLIED 1-4
1.7 EQUIPMENT REQUIRED BUT NOT SUPPLIED 1-4
1.8 LICENSE REQUIREMENTS 1-4

Section II - INSTALLATION 2-1

2.1 GENERAL INFORMATION 2-1
2.1.1 SCOPE 2-1
2.1.2 CERTIFICATION REQUIREMENTS 2-1
2.2 UNPACKING AND PRELIMINARY INSPECTION 2-1
2.3 EQUIPMENT INSTALLATION PROCEDURES 2-1
2.3.1 COOLING REQUIREMENTS 2-1
2.3.2 MOUNTING REQUIREMENTS 2-1
2.3.3 TRIG TY91 MOUNTING REQUIREMENTS 2-2
2.3.4 AUDIO PANEL MOUNTING RACK INSTALLATION 2-2
2.4 CABLE HARNESS WIRING 2-3
2.4.1 NOISE 2-3
2.4.2 AUDIO PANEL TRAY AND CONNECTOR ASSEMBLY 2-3
2.4.3 AUDIO PANEL INTERFACE 2-4
2.4.4 TY91 CONNECTOR (TRIG TY91(L) ONLY) 2-4
2.4.5 INTERFACING THE TY91(L) AS SINGLE, COM 1 OR COM 2 2-5
2.4.6 ANTENNA CABLE 2-5
2.4.7 TY91 TNC ANTENNA CONNECTION 2-5
2.4.8 VHF COMMUNICATIONS ANTENNA INSTALLATION 2-6
2.5 TELEPHONE (DUPLEX) FUNCTION FOR BLUETOOTH ® CAPABLE CELL PHONES 2-7
2.5.1 PAIRING SEPARATE MUSIC AND TELEPHONE DEVICES 2-7
2.5.2 TELEPHONE SIDETONE 2-8
2.5.3 "SWAP" MODE 2-8
2.5.4 BACKLIGHTING 2-8
2.5.5 UNSWITCHED INPUTS 2-8
2.6 INTERCOM WIRING 2-9
2.6.1 MUSIC INPUTS 2-9
2.6.2 MUSIC MUTING 2-9
2.7 ADJUSTMENTS 2-9
2.8 MICROPHONE GAIN REDUCTION 2-10
2.9 USER SETUP ADJUSTMENTS 2-11
2.10 COMMUNICATIONS ANTENNA INSTALLATION NOTES 2-12
2.10.1 ANTENNA LOCATION 2-12
2.11 TY91(L) ADJUSTMENTS 2-13
2.11.1 RADIO SIDETONE & RADIO SQUELCH ADJUSTMENT 2-13
2.11.2 RADIO FREQUENCY SPACING, 25 KHZ OR 8.33 KHZ 2-13
2.12 PAR200B PIN ASSIGNMENTS 2-14
2.13 POST INSTALLATION CHECKOUT 2-15
2.14 UNIT INSTALLATION 2-15
2.15 OPERATIONAL CHECKOUT 2-15
2.15.1 TY91 CHECKOUT 2-15
2.15.2 TELEPHONE CHECKOUT 2-16
2.16 FINAL INSPECTION 2-16

Section III OPERATION 3-1

3.1 SCOPE 3-1
3.1.1 ICONS AND SECOND FUNCTIONS 3-2
3.2 POWER AND FAIL SAFE (1) 3-2

3.2.1 TY91(L) RADIO POWER (AS SINGLE RADIO OR COM 1 ONLY) 3-2
3.2.2 ICS AND RADIO VOLUME CONTROLS (1) 3-2
3.3 COMMUNICATIONS TRANSMIT (XMT) SELECTION (2) 3-3
3.4 COM RECEIVE AUDIO SELECTOR (3) 3-3
3.4.1 INTELLIAUDIO® DIMENSIONAL AUDIO (11) 3-3
3.5 NAVAID AUDIO SELECTION (4) 3-4
3.6 COCKPIT SPEAKER (10) 3-4
3.7 VHF TRANSCEIVER CONTROL (6) 3-4
3.7.1 FREQUENCY SELECTION (6) 3-4
3.7.1 RADIO SIDETONE & RADIO SQUELCH ADJUSTMENT 3-6
3.7.2 MONITOR MODE (12) 3-6
3.7.3 TUNING 8.33 KHZ CHANNEL SPACING 3-7
3.8 INTERCOM OPERATION (8) 3-8
3.8.1 *INTELLIVOX*® VOX-SQUELCH 3-8
3.8.2 MONO HEADSETS IN STEREO INSTALLATION 3-9
3.8.3 INTERCOM MODES (8) 3-9
3.9 BLUETOOTH OPERATION 3-10
3.9.1 BLUETOOTH TELEPHONE CONNECTION 3-10
3.9.2 TELEPHONE (TEL) OPERATION 3-10
3.10 MUSIC MODE MENUS (9) 3-11
3.11 MUSIC MUTING (9) 3-12
3.12 INPUTS 3-12
3.13 USER SETUP FUNCTIONS 3-12
3.13.1 DISPLAY 3-13
3.13.2 DISPLAY REFRESH RATE (S/N DPRB1814 & ABOVE) 3-13
3.13.3 BLUETOOTH 3-14
3.13.4 OPTIONS 3-14
Section IV – Warranty and Service 4-1
4.1 WARRANTY 4-1
4.2 FACTORY SERVICE 4-1
Appendix A – External PTT Hook Up ..... A
Appendix B – PAR200B Installation Drawings ..... B
6.1 TY91 RADIO INSTALLATION DRAWINGS ..... B
Appendix C – J1 Connector Interconnect C
Appendix D – J2 Connector Interconnect ..... D
Appendix E – Instructions for FAA Form 337 and continuing airworthiness ..... E
9.1 INSTRUCTIONS FOR FAA FORM 337, AUDIO PANELS ..... E
9.2 INSTRUCTIONS FOR CONTINUING AIRWORTHINESS, AUDIO SYSTEM ..... E
9.3 ICA FOR TRIG TY91 RADIO: ..... E
Appendix F – RTCA DO160G Environmental Qualification Form ..... F

Rev	Date	Change
0	October 2019	Release of PAR200B
1	August 2020	Revised installation kit back shells
2	June 2022	Clarified COM 2 wiring diagram, added back shell details
3	September 2022	Added Expansion Unit information
4	June 2023	Revise Installation Kit Information
5	August 2024	Added Frame Rate option to user setup menu for video recorders, §3.13.2 (S/N DPRB1814 & up)

Section I – GENERAL INFORMATION

1.1 INTRODUCTION

The PAR200B represents another advancement in cockpit audio control and intercommunications utility. IntelliAudio®, using the USAF patented (#7,391,877) technology, provides True Dimensional Sound, which helps pilots to easily discern simultaneous radio receptions.

Using our patented *IntelliVox*® design and pilot programmable configurations, this marks the next level of audio control. The unit is designed for outstanding ergonomics and visually defined mode annunciation and selection.

The PAR200B is interchangeable with the PAR200A Audio Panels

Before installing and/or using this product, please read this manual completely. This will ensure that you will take full advantage of all the advanced features in the PAR200B.

1.2 SCOPE

This manual provides detailed installation and operation instructions for the PS Engineering PAR200B-series of Audio Selector Panel/Intercom Systems. This includes the following units:

Model	Description	PS Engineering Part Number
PAR200B	Stereo Audio Selector Panel with control for VHF Communications radio. Includes stereo intercom, with IntelliAudio®, and Bluetooth® Interface	050-228-0300
PAR200B	Same as above, with expansion capability, includes P/N 11636R	050-228-0302
TY91(L)	VHF Communications Transceiver (6 Watt)	050-228-8744

1.3 EQUIPMENT DESCRIPTION

The PAR200B is a state-of-the-art audio isolation amplifier and audio selector that contains an automatic voice activated (VOX) intercom system and serial data control/indication for a Trig VHF communications receiver. It can switch two transceivers (Com 1, Com 2) and two receivers (Nav 1, Nav 2).

A Bluetooth ® TELEPHONE feature allows the PAR200B to interface the aircraft headset(s) and Bluetooth enabled cellular devices.

Warning: Use of non-aviation approved cellular telephone equipment may be prohibited by regulation.
PS Engineering is not responsible for unauthorized airborne use of cellular telephones.
For airborne use, the PAR200B must be interfaced with an approved system.

There are four unswitched inputs, available for traffic or EGPWS, autopilot disconnect tones, and/or radar altimeter warning.

Pushbutton switches select one of the communication transceivers for the pilot and copilot positions, and allow radio communications. In "Split Mode", the PAR200B has the ability to allow the pilot to transmit on Com 1 while the copilot can transmit on Com 2. A fail-safe mode connects the pilot headphone and microphone to COM 1 if power is removed for any reason, or if the power switch is placed in the Off (Fail-safe) position. Unswitched input #1 is also provided to the pilot headphone in fail-safe. Failsafe will only be heard in one ear when wired as stereo.

A four-station activated (VOX) intercom is included in the PAR200B. This system has PS Engineering's patented *IntelliVox*® circuitry that eliminates manual adjustments. The intercom system incorporates pilot isolate, all and crew modes, two independent stereo music inputs with "SoftMute™".

The dual concentric knob on the left side controls intercom volume (small knob) radio volume (large knob, and radio frequency input. This selection is made with the top line-select button.

1.4 APPROVAL BASIS — FAA TSO, EASA ETSO

1.1.1 PAR200B

The PAR200B-series Audio Selector Panels have FAA authorization under TSO C139 (*Aircraft Audio Systems and Equipment*). The VHF Communication Transceiver portion of the PAR200B holds **TSO authorizations** under TSO C169a.

The PAR200B-series Audio Selector Panels hold EASA authorization under ETSO C139 (*Aircraft Audio Systems and Equipment*). The VHF Communication Transceiver portion of the PAR200B is EASA authorized under ETSO-2C169a. EASA.IM.210.10053809.

The partial TSO applies to C169a because the PAR200B unit provides control and display only for the TY91-series of VHF communications equipment.

The audio system complies with relevant portions of ED-14C/DO-160G (*Environmental Conditions and Test Procedures for Airborne Equipment*), DO-254, (*Design Assurance Guidance for Airborne Electronic Hardware*) and ED-18/DO-214 (*Audio Systems Characteristics and Minimum Operational Performance Standards for Aircraft Audio Systems*).

NOTE:

The conditions and tests for TSO approval of this article are minimum performance standards. Those installing this article, on or in a specific type or class of aircraft, must determine that the aircraft installation conditions are within the TSO standards. The article may be installed only following 14 CFR Part 43 or the applicable airworthiness requirements.

1.1.2 Trig TY91-Series:

The VHF Communication Radio (Trig Avionics TY91L/) is **EASA and FAA-approved** under ETSO 210.10042695, Rev, B or Subsequent Revision, under 2C169a Class C, E, H1, H2, 4, 6, ETSO 2C128, TSO C169a Class C, E, 4, 6, TSO C128a TSO-C169a, ETSO 2C169a Class C, E, H1, H2, 4, 6, ETSO 2C128, TSO C169a Class C, E, 4, 6, TSO C128a EUROCAE ED-23C, EUROCAE ED-67, EUROCAE ED-14F (RTCA DO-160F), RTCA DO-186B, RTCA DO-207 ED-12B (RTCA DO-178B) Level B DO-254 Level C
FCC Identification TY91 VZI00882

Applicable documents EUROCAE ED-23C, EUROCAE ED-67, EUROCAE ED-14F (RTCA DO-160F), RTCA DO-186B, RTCA Software ED-12B (RTCA DO-178B) Level B Hardware DO-254 Level C

Operation is subject to the following conditions:
This device may not cause harmful interference. This device must accept any interference received, including interference that may cause undesired operation.

1.5 SPECIFICATIONS

Audio Selector/Intercom	FAA TSO C139 EASA ETSO C139
Communications Transceiver	FAA TSO-C169a (PARTIAL) EASA ETSO 2C169A
Environmental Qualification DO-160G	A1C1BAESRXXXXXXZ B(XX)ABATTBXXA2E2 XXX
Operating Temperature Range:	-20º C to 55ºC, short term -40°C to +70°C
Altitude:	Up to 35,000 feet in a non-pressurized area
WEIGHT *PAR200B Unit* *Rack with connectors*	 1.0 lb. (0.45 kg) 0.51 lb. (0.24 kg)
Dimensions	Height: 1.3 in. (3.3 cm) Width: 6.25 in. (16.9 cm) Depth behind panel 7.15 in. (18.16 cm)

AUDIO PANEL POWER REQUIREMENTS (Including Internal Lighting):	
Voltage:	**11-33 VDC**
Maximum Current:	2.5 Amp (Externally protected by a 3A pull-type breaker)
Audio Selector Specifications	
Audio selector panel input impedance:	510 Ω
Input Isolation:	-60 dB (min.)
Receiver Inputs:	4 (Com 1, Com 2, Nav 1, Nav 2)
Unswitched Inputs:	4
Transmitter Selections:	3 (Com 1, Com 2, Com1/2)
Headphone Impedance:	150 – 1000 Ω
Headphone Output:	38 mW each headset, no clipping <1% THD typical into 150
Speaker Output (into 4 Ω) with no clipping 14 VDC: 28 VDC:	 3 Watts (min.) 10 Watts (min.)
Microphone Impedance:	150 - 600 Ω
Intercom Specifications	
Intercom Positions:	4 places (with individual *Intelli*Vox® circuits) (8 with expansion, -0202 ONLY)
Music Inputs:	2, (Independent, Stereo)
Music Muting:	>-30 dB "Soft Mute" when Com or intercom active.
Distortion:	<1% THD @ 38 mW into 150Ω
Mic Freq. Response, 3 dB:	300 Hz - 6000 Hz
Music Freq. Response, 3 dB:	10 Hz – 16 kHz
Bluetooth FCC ID	Class 3, FCC ID QOQWT32I

TY91L VHF Transceiver Specifications	
Radio Type	Amplitude Modulation (AM) Aircraft Transceiver
Channels (Transmit & receive)	760 channels, 25KHz spacing 2280 channels, 8.33 kHz spacing 118.000 – 136.992MHz
Frequency Selection	On PAR200B Audio Panel
Frequency Display	Alpha/numeric OLED display on PAR200B
Frequency control	PLL frequency synthesis, which is microprocessor controlled in TY91.
Power consumption Receive (no signal) *Transmit*	2.8W @ 14VDC 3.2A
Input Voltage	11-33 VDC 5A Circuit Breaker.
Power output	5 watts (nominal) VSWR Tolerance < 2:1 for best operation (5:1 without damage)
Receiver sensitivity	-6dB SINAD @ 5µV (1KHz audio with 70% modulation)
Data Interface	RS232
Headset volume output	Nominal 100 milliwatts output to 600 Ω
Temperature range	-20 to +70 degrees Celsius
Stability	< +/- 4.00 ppm
Dimensions	W-2.5" x H-1.9" x D6.3" (plus 1.5" for harness) W-66 mm xH-48mm D-160 (plus 35mm for harness)
Weight	0.77 lbs. 0.350 kg
FCC ID:	VZI00882

1.6 EQUIPMENT SUPPLIED

One ea. of the following items:

Model	Description	PS Part Number	Trig P/N
PAR200B	PAR200B Audio Panel with intercom and radio function control	050-228-0300	
PAR200B	Same as above but for Expansion (P/N 11636 Included)	050-228-0302	
And the TY91(L) below			
TY91(L)	VHF Communications Transceiver (6 watts)	050-228-8744	00882-00-**05**

Installation Kit: 250-890-0500, contains:

Description	Quantity	Part Number
PAR200B installation rack assembly	1	430-890-0040
PAR200B Rack back plate	1	430-890-0050
44-pin connector kit	2	120-891-2045
Back shell, bottom	2	625-025-1131
Back shell cover	2	625-025-1132
Strain Relief	4	425-149-1179
Zip Ties	2	800-000-0004
2-56 X 3/16 screw for connector shell	8	475-049-3189
4-40 X 7/16 screw w/nylon patch	4	475-440-0007
4-40 X 3/8 screw w/lock washer	4	475-440-1038
4-40 X 1/8 screw w/lock washer	2	475-440-0001
Solder Lug	2	475-009-0001
Cable Clamp	1	625-001-0002
#6-32 x ½" Flat head Philips screw	6	475-632-0012
#6-32 Clip Nut	6	475-630-0002

TY91 Installation Kit 250-228-0200, Containing:

Description	Quantity	Part Number
DB 25 Connector, Crimp type	1	425-025-0010
DB 25 Connector hood	1	625-025-0001
DB 25 Thumb Screws 4-40 x 1.94	2	475-002-0002
Crimp female sockets	25	425-020-5090
TNC Crimp Connector	1	425-400-1223

1.7 EQUIPMENT REQUIRED BUT NOT SUPPLIED

a. Circuit Breaker: 1 ea; 3 amp PULL TYPE REQUIRED for PAR200B
b. Circuit Breaker: 1 ea; 5 amp PULL TYPE REQUIRED for transceiver power (to TY91)
c. Headphone Jacks (up to 4 Stereo, as Required)
d. Microphone Jacks (up to 4 as Required)
e. Headphones, 150 Ω (Stereo), up to 4 as required
f. Microphones, up to 4 as required
g. VHF Communication antenna 118-137 MHz, VSWR <2:1 (FAA-TSO approved is recommended)
h. Mounting hardware for TY91, as appropriate
i. Interconnect Wiring, coaxial cable (RG400 or RG142B or equivalent)

1.8 LICENSE REQUIREMENTS

In some localities other than the United States, an Aircraft Radio Station license may be required. In the United States, you do not need a license to operate a two-way VHF radio aboard aircraft operating domestically. Aircraft operating domestically do not land in a foreign country or communicate via radio with foreign ground stations. Flying in international or foreign airspace is permitted, so long as the previous conditions are met. If you travel to a foreign destination, however, (e.g., Canada, Mexico, Bahamas, British Virgin Islands) a license is required. Visit http://wireless.fcc.gov for more information.

Section II - INSTALLATION

2.1 GENERAL INFORMATION

2.1.1 SCOPE

This section provides detailed installation and interconnection instructions for the PS Engineering PAR200B Audio Selector Panel/Intercom/ with VHF communication radio controls.

Please read this manual carefully before beginning any installation to prevent damage and post-installation problems. Installation of this equipment requires special tools and knowledge.

The PAR200B is interchangeable with the PAR200A Audio Panels, and can replace the PAR200A without modification to the installation. A logbook maintenance entry is all that is required.

2.1.2 Certification Requirements

NOTE

The PAR200B Intercom is FAA approved under TSO C139/ETSO C139 (*Aircraft Audio Systems and Equipment*) and contains partial elements of TSO C169a/ETSO 2C169A (*VHF Radio Communications Transceiver Equipment Operating Within Radio Frequency Range 117.975 To 137.000 Megahertz*).
The partial TSO applies to C169a, because the PAR200B unit provides control and display only for the TY91-series of VHF communications equipment.

The conditions and tests for TSO approval of this article are minimum performance standards. Those installing this article, on or in a specific type or class of aircraft, must determine that the aircraft installation conditions are within the TSO standards.
The article may be installed only following 14 CFR Part 43 or the applicable airworthiness requirements.

See FAA AC 20-41A for information regarding substitute TSO Aircraft Equipment.

2.2 Unpacking and Preliminary Inspection

Use care when unpacking the equipment. Inspect the units and parts supplied for visible signs of shipping damage. Examine the unit for loose or broken buttons, bent knobs, etc. Verify the correct quantity of components supplied with the list in Section 1.6. If any claim is to be made, save the shipping material, and contact the freight carrier. Do NOT return units damaged in shipping to PS Engineering. If the unit or accessories show any sign of external shipping damage, contact PS Engineering to arrange for a replacement. Under no circumstances attempt to install a damaged unit in an aircraft. Equipment returned to PS Engineering for any other reason should be shipped in the original PS Engineering packaging, or other UPS approved packaging.

2.3 Equipment Installation Procedures

2.3.1 Cooling Requirements

Forced air-cooling of the PAR200B is not required. However, the units should be kept away from heat producing sources (i.e. defrost or heater ducts, dropping resistors, heat producing avionics) without adequate cooling air provided.

2.3.2 Mounting Requirements

The PAR200B must be rigidly mounted to the instrument panel of the aircraft structure, within view and reach of the pilot position(s). The unit may be mounted in any area where adequate clearance for the unit and associated wiring bundle exist.

To prevent noise, avoid installing the unit close to high current devices or systems with high-voltage pulse type outputs, such as DME or transponders. Avoid running the interconnecting bundles near any high current wires.

2.3.3 Trig TY91 mounting requirements

The TY91 remote VHF Communications radio is mounted to the aircraft structure with 4 ea #6-32 (not supplied) screws through the mounting flange. Guidance can be found in AC 43.13-2B, Chapter 2.

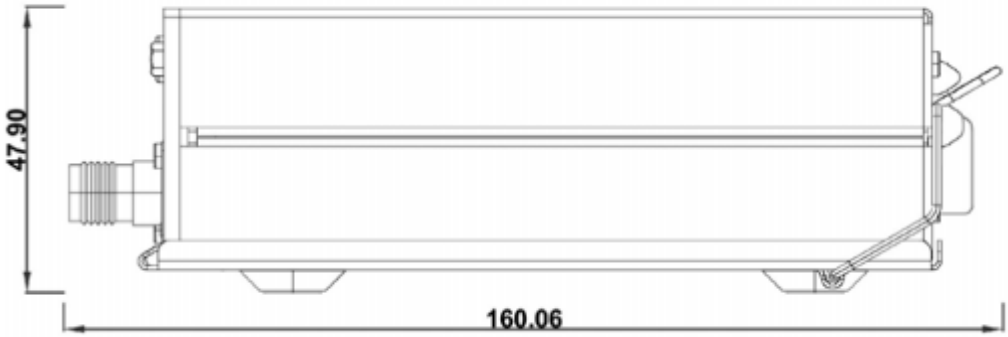

Figure 2-1 TY91 VHF Transceiver (Remote Mount)

2.3.4 Audio Panel Mounting Rack Installation

Remove the audio panel from the mounting tray by unscrewing the 3/32" hex-head screw that is in the center of the unit. Use caution to avoid hitting the photo-detector lens. Carefully slide the unit free of the tray. Set the unit aside in a safe location until needed. Install the tray using six clip nuts (475-630-0002), and six FHP 6-32 x ½" screws (475-632-0012). The audio selector panel must be supported at front and rear of the mounting tray.

Assemble the connector back shell by attaching the top and bottom using 4 ea. #2 x 56 Phillips screws (475-049-3189) and the two "J" strain relief sliders (425-149-1179) in the slot provided. Secure the cable bundle between the back shell and the sliders with Zip tie. The connectors are mounted to the tray back plate with #4-40 screws (475-440-1038), from the inside of the tray. Ensure that proper strain relief and chafing precautions are made during wiring and installation, using the cable clamp (625-001-0002).

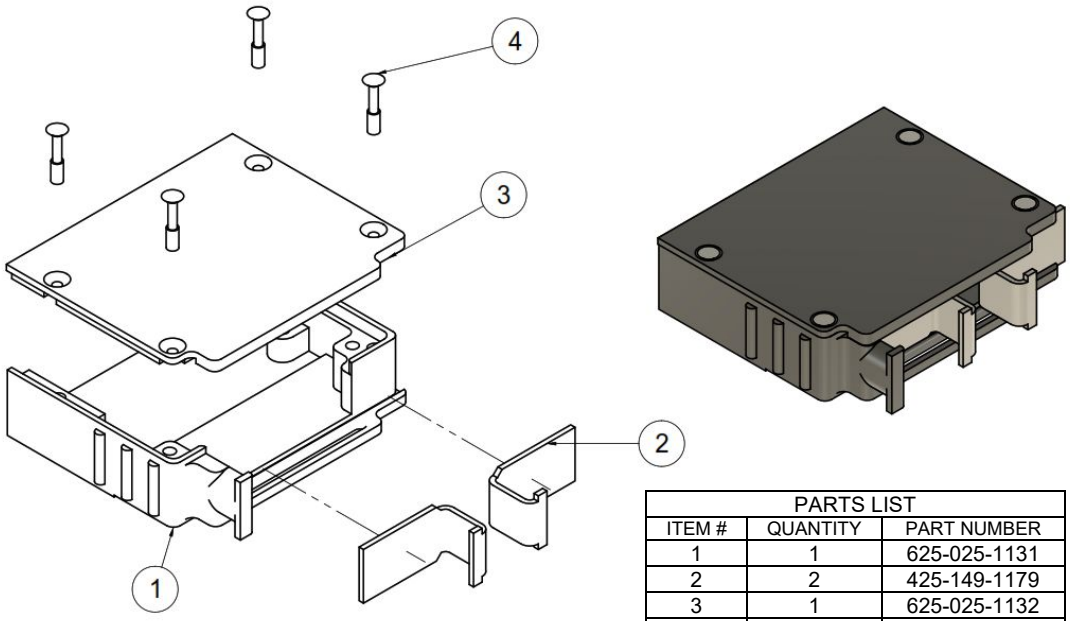

PARTS LIST		
ITEM #	QUANTITY	PART NUMBER
1	1	625-025-1131
2	2	425-149-1179
3	1	625-025-1132
4	4	475-049-3189

2.4 Cable Harness Wiring

Referring to the appropriate Appendix, assemble a wiring harness as required for the installation. All wires must be MIL-SPEC in accordance with current regulations. Two- and three-conductor shielded wire must be used where indicated and be MIL-C-27500 or equivalent specification. Proper stripping, shielding and soldering technique must be used at all times. It is imperative that correct wire be used.

Refer to FAA Advisory Circular 43.13-2B for more information. Failure to use correct techniques may result in improper operation, electrical noise, or unit failure. Damage caused by improper installation will void the PS Engineering warranty.

2.4.1 Noise

Due to the variety and the high power of radio equipment often found in today's general aviation aircraft, there is a potential for both radiated and conducted noise interference.

The PAR200B power supply is specifically designed to reduce conducted electrical noise on the aircraft power bus by at least 50dB. Although this is a large amount of attenuation, it may not eliminate all noise, particularly if the amplitude of noise is very high. Shielding can reduce or prevent radiated noise (i.e., beacon, electric gyros, switching power supplies, etc.) However, installation combinations can occur where interference is possible. The PAR200B was designed in an RFI hardened chassis and has internal Electromagnetic Interference (EMI) filters on all inputs and outputs.

Ground loop noise occurs when there are two or more ground paths for the same signal (i.e., airframe and ground return wire). Large cyclic loads such as strobes, inverters, etc., can inject noise signals onto the airframe that are detected by the audio system. Follow the wiring diagram very carefully to help ensure a minimum of ground loop potential. Use only Mil Spec shielded wires (MIL-C-275000, or better). Under no circumstances, combine a microphone and headphone wiring into the same shielded bundle. Always use a 2- or 3-conductor, shield wire as shown on the installation-wiring diagram.

The shields can be daisy-chained together, and then connected to the ground lugs mounted on the center of the back plate.

Radiated signals can be a factor when low-level microphone signals are "bundled" with current carrying power wires. Keep these cables physically separated. It is very important that you use insulated washers to isolate the ground return path from the airframe to **all** headphone and microphone jacks.

2.4.1.1 Music Inputs and Noise

PAR200B units utilize differential music inputs to help prevent noise from entering the music system. This feature is usually transparent to the installer; however, it is important that the appropriate music signal and ground connections are made directly to the dedicated music signal and ground inputs on the PAR200B. The power for In Flight Entertainment and audio panel should be a common bus.

If a music jack is installed for Music 1 or 2, we strongly recommend isolating the jack from airframe ground, by using an insulated mounting plate.

NOTE

Adding a high-performance audio control system, particularly in conjunction with high-performance active noise canceling headsets, cannot improve on older avionics that were designed for cabin-speaker use. PS Engineering makes no claim that the audio panel will provide a noise-free audio quality under all installation conditions, particularly with older avionics.

2.4.2 Audio Panel Tray and Connector Assembly

The rack connectors mate with two 44-pin connectors in the PAR200B. The connectors are a sub-miniature crimp-type, and require the use a hand crimp tool, from table below (or equiv.). The connectors are mounted to the tray back plate with #4-40 screws (475-440-1038), from the inside of the tray and the mounting block, 431-891-0100. Ensure that proper strain relief and chafing precautions are made during wiring and installation, using the cable clamp (625-001-0002).

Manufacturer	Crimping Tool	Positioner	Extraction tool
AMP	601966-1	601966-6	91067-1
Daniels	AFM8	K42	M24308-1
ITT-Cannon	995-0001-584	995-0001-739	91067-1

Table 2-1 PAR200B Connector Pin crimping tools

Manufacturer	Crimping Tool	Positioner	Extraction tool
Mil-Spec	M22520/2-01	M22520/2-08	
Daniels	AFM8	K13-2	M24308-1

Table 2-2 TY91 Connector Crimping tools

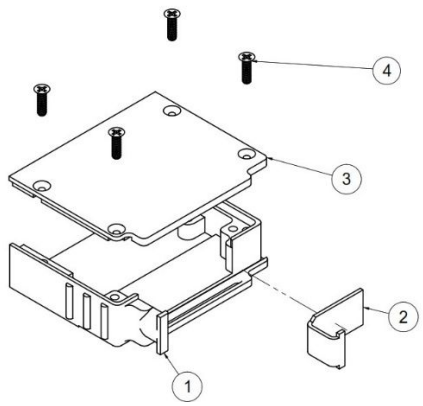

ITEM	DESC.	PART No.
1	Shell Bottom	625-025-1131
2	Strain Relief Bracket	425-249-1179
3	Shell Top	625-025-1132
4	#2 -56 Screws	425-256-0516

Figure 2-2 Sub-D Connector Back Shell Assembly

Assemble the two back shells using qty. 4 #2-56 Screws sliding the strain relief "L" bracket in its track against the harness and secure with a tie-wrap.

2.4.3 Audio Panel interface

The PAR200B is designed to interface with standard aircraft avionics, and presents a 500 Ω receiver impedance. For best results, a twisted-shielded cable is recommended from the avionics audio source to the audio panel, with the shield grounded at the audio panel end.

Inputs N1 and N2 can be used to control navigation receiver audio, J1 Pins 17 WRT 18 and J1 19 WRT 20, respectively.

Some avionics do not provide a separate audio low, and may introduce additional electrical noise into the system. For best results, connect the audio low from the audio panel to the radio ground, using one conductor of the twisted-shielded cable.
TY91 VHF COM Interface

2.4.4 TY91 Connector (Trig TY91(L) <u>only</u>)

The TY91 has a 25-pin crimp type connector.

1	Com Audio Low
2	COM Audio High
3	No Connect
4	No Connect
5	RS232RX (data in-TX)
6	RS232TX (data out-RX)
7	No Connect
8	No Connect
9	Aircraft Ground
10	No Connect
11	No Connect
12	Controller Radio Power
13	Radio On

14	No Connect
15	COM Mic Key
16	No Connect
17	No Connect
18	Transmit Interlock
19	Airframe Ground
20	No Connect
21	No Connect
22	Ground (Not Used)
23	COM Mic Audio Hi
24	Aircraft Power
25	Aircraft Power

2.4.5 Interfacing the TY91(L) as Single, COM 1 or COM 2

The PAR200B/ Trig TY91(L) can be configured to be a stand-alone COM, or as COM 1 or COM 2 in a multiple radio installation. In this case, PS Engineering recommends that the PAR200B/TY91(L) be used as COM 2. In the event of a failure, the PAR200B will be in fail-safe, and COM 1 can be used.

When used as **COM 2**, Radio Power (J2-30), and Radio Ground connections (J2-42)between PAR200B and TY91(L) are *not* required.

The PAR200B must be configured with an installation strap when PAR200B radio is being used as **COM 2,** by applying ground to J1, Pin 25. J1, pin 26 is a convenient ground.

NOTE: When wiring remote radio as COM 1, leave J1-25 open. When wiring as COM 2, connect J1-25 to J1-26.

If the TY91(L) is used as COM 1, the PAR200B can fail-safe to it, because it is divided internally as audio panel and COM control. In addition, the TY91(L) power supply is provided by an independent circuit breaker and power supply in the PAR200B. See §3.2.1 for operational information.

When properly selected, the PAR200B OLED display will read either COM 1 (includes stand-alone), or COM 2.

2.4.6 Antenna Cable

Use a high quality 50-ohm coaxial cable, such as RG400 or RG142B. When routing the cable, ensure that you:

- Route the cable away from sources of heat.
- Route the cable away from potential interference sources such as ignition wiring, 400Hz generators, fluorescent lighting and electric motors.
- Allow a minimum separation of 300mm (12 inches) from an ADF antenna cable.
- Keep the cable run as short as possible.
- Avoid routing the cable round tight bends.
- Avoid kinking the cable even temporarily during installation.
- Secure the cable so that it cannot interfere with other systems.

2.4.7 TY91 TNC Antenna connection

The VHF Com radio uses a solder/crimp TNC connector, Amphenol 31-2.

This section describes the technique for attaching the antenna cable to the supplied TNC connector.

The supplied connector can be completed using a wide range of commercial crimp tools (for example the Tyco 5-1814800-3). The die apertures for the inner pin and the outer shield should be approximately 1.72 mm and 5.41 mm respectively.

1. Strip back the coax cable to the dimensions in the table, as shown in the diagram below. Slide 25 mm (1 inch) of heat shrink tubing over the cable.

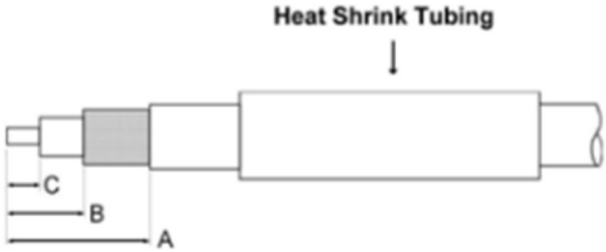

Dimension	Cut size (mm)	Cut size (inches)
A	17.5	0.69
B	7.2	0.28
C	4.8	0.19

2. Slide the outer crimp sleeve over the cable – it must go on before securing the center contact.
3. Crimp the center contact to the cable.
4. Insert the cable into the connector – the center contact should click into place in the body, the inner shield should be inside the body of the connector and the outer shield should be outside the body.
5. Crimp the outer sleeve over the shield.
6. Slide heat shrink tubing forward (flush to connector) and heat to shrink the tubing.

2.4.8 VHF Communications Antenna Installation

The antenna should be installed according to the manufacturer's instructions. The following considerations should be taken into account when locating the Antenna.

- The antenna should be well removed from any projections, the engine(s) and propeller(s). It should also be well removed from landing gear doors, access doors or other openings that will break the ground plane for the antenna.
- Avoid mounting the antenna within 2 feet of a GPS antenna, and as far as practical from any ELT antenna.
- If the simultaneous use of two radio units is required, then each antenna should be as far apart as practicable for maximum isolation. We would recommend placing one antenna on top and one on the bottom of the airframe. The Transmit Interlock function should also be used in this case (section 5.6.8).
- Where practical, plan the antenna location to keep the cable lengths as short as possible and avoid sharp bends in the cable to minimize the VSWR.

Electrical connection to the antenna should be protected to avoid loss of efficiency because of the presence of liquids or moisture. All antenna feeders shall be installed in such a way that a minimum of RF energy is radiated inside the aircraft.

2.4.8.1 Antenna Ground Plane

When a conventional aircraft monopole antenna is used, it relies on a ground plane for correct behavior. For ideal performance, the ground plane should be as large as practical; in any case at least one square meter. In

a metal skinned aircraft this is usually easy to accomplish, but is more difficult in a composite or fabric skinned aircraft. In these cases, a metallic ground plane should be fabricated and mounted under the antenna.

The thickness of the material used to construct the ground plane is not critical, providing it is sufficiently conductive. A variety of proprietary mesh and grid solutions are available. Refer to Advisory Circular AC43.13-2B, Chapter 3.

2.5 TELEPHONE (Duplex) Function for Bluetooth ® capable Cell Phones

The TELEPHONE mode in the PAR200B is compatible with cellular telephones with Bluetooth®. There is no wiring required, all functions are handled in the Bluetooth telephone.

The PAR200B Bluetooth® interface is always "discoverable", so you just need to search for the PAR200B from your Bluetooth-equipped phone or music source. PAR200B is shipped with the default pin code disabled. Activating the pin code may not work with all phones. The default access code is 0000, if applicable. Once the PAR200B has been "paired" with your Bluetooth device, it will reconnect automatically when you turn on the audio panel.

The telephone is distributed as dictated by the ISO, ALL, CREW mode.

ISO mode - only the Pilot is on the telephone.

CREW mode - only the Pilot and Copilot are on the telephone.

ALL mode - everyone is on the telephone.

You can answer a call when you hear the "telephone ringing" in your headset. Answering the phone call can either be done at the audio panel or if you have access to your phone and selecting the answer function of that telephone.

2.5.1 Pairing separate music and telephone devices

It is possible to use a different music source (iPad, iPod with Bluetooth adapter, Bluetooth enabled laptop, etc.) and telephone. However, the telephone source must be paired **first**, *before* the music, if the telephone also has music streaming capability. Otherwise, the music source will take over the telephone port.

Only one can be a phone. If the telephone can provide both telephone and streaming music, when the phone is connected, it will automatically disconnect the music device. If it is possible to turn off the music streaming function on the telephone, then both the telephone and a separate Bluetooth® enabled music device can be used at the same time.

If Bluetooth connections become unreliable or do not connect, you may need to reset the PAR200B. See section 3.13.2 to reset the Bluetooth device at the audio panel.

NOTE

FCC Regulations (47 CFR 22.925) prohibit airborne operation of cellular phones;
Cellular telephones installed in or carried aboard airplanes, balloons or any other type of aircraft must not be operated while such aircraft are airborne (not touching the ground). When any aircraft leaves the ground, all cellular telephones on board that aircraft must be turned off. The use of cellular telephones while aircraft is on the ground is subject to FAA regulations.
FAA Regulation 14 CFR 91.21(5) allows for use of portable electronic devices that the operator of the aircraft has determined will not cause interference with the navigation or communication system of the aircraft on which it is to be used.
PS Engineering, Inc. does not endorse using unapproved cellular telephone equipment in flight, and takes no responsibility for the user's action. PS Engineering does not guarantee compatibility with personal cellular telephones. For a list of phones that have been tested, visit www.ps-engineering.com.

2.5.2 Telephone sidetone

The PAR200B is shipped from the factory with Telephone sidetone enabled. The PAR200B will provide cell phone sidetone (your voice of the telephone conversation). Some telephones already provide sidetone, and the PAR200B can be configured to disable internal sidetone during a phone call, this can be selected from the user phone screen when a call is made.

2.5.3 "Swap" Mode

When a momentary, normally open, push-button switch is connected between pin 20 on the J2 connector and aircraft ground, the user can switch between Com 1 and 2 by depressing this switch without having to turn the mic selector switch. This yoke-mounted switch eliminates the need to remove your hands from the yoke to change transceivers.

2.5.4 Backlighting

The PAR200B has an automatic dimming of the pushbutton green annunciation LEDs controlled by a photocell. Control of the unit white backlighting is through the aircraft avionics dimmer. For 12-Volt aircraft, connect J2 Pins 6 and 7 to the aircraft dimmer bus, and pin 5 to ground.

The OLED display backlighting is controlled by the automatic photocell dimming.

If an external dimmer control is **not** used, a constant maximum back light illumination can be established for viewing. Pin 6 or 7 (depending on system voltage) must be tied to power (J2, pin 8 or 9) for the back-lighting system to work. The photocell mounted in the unit face will automatically adjust the intensity of the push-button annunciation green LEDs.

2.5.5 Unswitched inputs

J1, pins 31, 44, 29 and J2 pin 15 are unswitched, unmuted (by transmitter keying), inputs # 1, 2, 3 and 4, respectively. These inputs are presented to the pilot and copilot regardless of the audio configuration, and will mute the entertainment inputs based on the music muting mode. These 510 Ω inputs can be used for altimeter DH audio, GPS waypoint audio, autopilot disconnect tones, or any other critical audio signal. Unswitched #1 is always presented to the crew headphones, and is available to the pilot left headset channel (J2 pin 16) in fail-safe (off) mode.

Unswitched Input	Hear in Fail Safe	Hear in Crew Headset	Gain
1	Yes	Yes	1:1(fixed)
2	No	Yes	1:1(fixed)
3	No	Yes	Adjustable
4	No	Yes	1:1(fixed)

Table 2-3 Unswitched input table

NOTE

Inputs 1, 2 and 4 are fixed (1:1), and any audio level adjustments must be made at the input source. Unswitched #3 has a variable adjustment control located on the bottom side of the unit. This control allows you to control the volume level of that unswitched input from 50% to 200% of the input level. Refer to Adjustments section.

2.6 Intercom wiring

See Appendix C and D for intercom connection configurations. It is critical to the proper operation of this system to have this connector wiring made in accordance with these diagrams. Use 2- and 3-conductor, MIL-spec cable as shown. Connect the shields at the audio panel end only, and tie to the audio low inputs as shown.

2.6.1 Music Inputs

The PAR200B has two INDEPENDENT inputs hard-wired into the rear connectors, in addition to the Bluetooth® music streaming (which is presented as Music 1). Music input number 1 is J2 pins 23 (left channel) and 24 (right channel), with respect to pin 25, and Music number 2 is connected to 26 (left channel), 27 (right channel), with respect to 28.

Music 2 is never heard by the pilot.

See §3.10 for music distribution information.

NOTE
Use the low-level output of any additional entertainment device to connect to the audio panel. Maximum signal level is **3 V** p-p. **DO NOT** use a speaker-level output; this will cause internal damage in the audio panel.

2.6.1.1 Music 1 all headsets (J2, Pin 22)

If J2, Pin 22 is connected to aircraft ground, Music 1 will also be heard in the passengers' headsets. Music 2 will be disabled when J2, Pin 22 is grounded.

2.6.2 Music muting

The PAR200B incorporates a "Soft Mute™" system. This will mute the music devices during intercom conversation or radio reception. The pilot's muting modes are controlled by the front panel "Mute" button, and others with the Music controls in the OLED menu. See §3.9 for more information.

CAUTION
Local oscillators and internal signals from entertainment equipment can cause undesired interference with other aircraft systems. Before takeoff, operate the entertainment devices to determine if there is any adverse effect within the aircraft systems. If any unusual operation is noted in flight, immediately switch off the entertainment devices.

All entertainment devices must be switched off for both takeoff and landing.

2.6.2.1 Music 2 Mute (J2 Pin 13 & 14)

Connecting J2 pin 13 to pin 14 (or ground) through a SPST switch places the music #2 music source into the Karaoke Mode. In this mode, incoming music and intercom conversation will not mute the music for the passengers' intercom net. This allows uninterrupted music during casual conversation.

2.7 Adjustments

The PAR200B is factory adjusted to accommodate the typical requirements for most aircraft configurations. There are three adjustments with access holes through the top cover (see §2.11) that allow the installer to tailor the specific functions.

- UNSW 3 VOL- Unswitched Input 3 Volume, adjust from 50% to 200% of input value. Turn counterclockwise to increase gain.
- SPR VOL- Adjust the external speaker gain. Turn clockwise to increase.
- DIP Switches (High Noise Mic Gain Configuration)

Figure 2-3 – PAR200B Adjustments

2.8 Microphone gain reduction

For installations in very noisy aircraft, a reduction in the intercom microphone input gain might be desirable. The PAR200B has two DIP switches located on the main board that can switch the inputs to a lower gain setting.

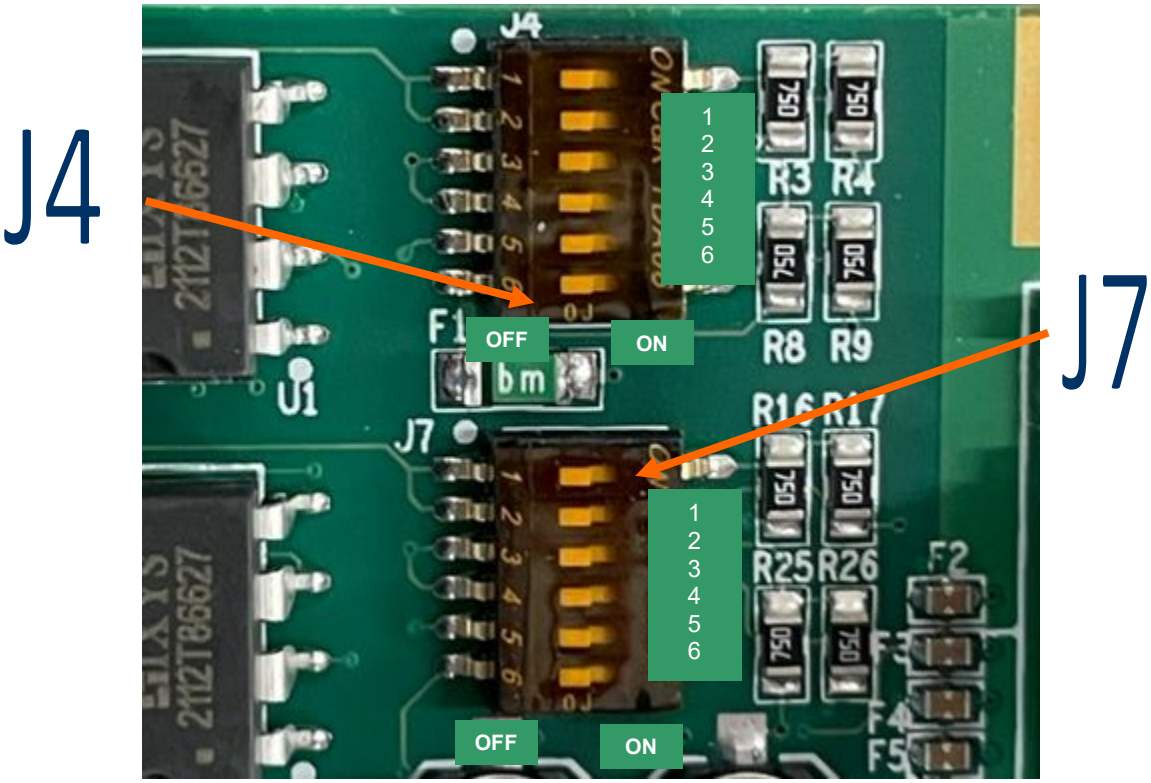

Figure 2-4 DIP switches

NOTE: Before changing the intercom microphone gain, we recommend installation of Oregon Microphone Muff kits as these solve almost all squelch issues. See §3.8.1.

Change the settings as shown in the table below.

Switch Bank	Switch	Noisy Cockpit	Normal Cockpit
	Pilot Microphone		
J4	1	OFF	ON
	2	ON	OFF
	Copilot Microphone		
	3	OFF	ON
	4	ON	OFF
J7	Passenger 1 Microphone		
	1	OFF	ON
	2	ON	OFF
	Passenger 2 Microphone		
	3	OFF	ON
	4	ON	OFF

Table 2-4 Microphone gain settings

2.9 User Setup Adjustments

****DO NOT MAKE ADJUSTMENTS IN FLIGHT****

Cycling power will remove the audio panel from the user setup menus and back to normal audio panel operation.

To access the user setup adjustment menus, turn the PAR200B off and then back on. While the **version** screen is displayed, push the bottom line-select button (there is an indicator bar in the display indicating that a menu is available).

This places the unit into the "User Configurable Mode – home screen". This allows adjustment for:

- OLED Screen Adjustment
- Bluetooth menus
- Mute mode recall
- Knob default

2.10 Communications Antenna Installation Notes

2.10.1 Antenna Location

For best results while in Split Mode, we recommend that the one VHF communications antenna is located on top of the aircraft while the other communications antenna is installed on the bottom. Any antenna relocation must be accomplished in accordance with AC 43.13-2B, aircraft manufacturers' recommendations, and other FAA-approved technical data.

WARNING

It is probable that radio interference will occur in the split mode when the frequencies of the two aircraft radios are adjacent, and/or the antennas are physically close together. **PS Engineering makes no expressed or implied warranties regarding the suitability of the PAR200B in Split Mode.**

2.11 TY91(L) Adjustments

2.11.1 Radio Sidetone & Radio Squelch Adjustment

To change the automatic squelch threshold and sidetone level for the Trig TY91 transceiver: Enter the Radio Volume mode by pressing the top line select (or ICS) button until the setup screen appears.

Turn the outer knob to set the squelch threshold between Off and 10. Set the value as desired, lower numbers (weak signals open), medium range (normal operation) or high numbers (blocks RF noise, requires stronger signals to open).

Turn the smaller inner knob to increase or decrease the radio sidetone as desired. Typically, the radio sidetone is adjusted slightly lower volume than the received radio signals.

2.11.2 Radio Frequency spacing, 25 kHz or 8.33 kHz

Hold the top line select button for 1 second, which will show the radio menu. Press again to toggle between either 25 kHz spacing or 8.33 kHz spacing. This will be indicated on the OLED screen when the trailing digit on the 0.000 MHz is full size. As in the PAR200A, if the ICS button is held for 1 second, the radio menu will also appear. See §3.7.3.

2.11.2.1 Channel Assignments:

The following table provides an example of the Frequency/Channel assignments as displayed on the PAR200B.

Bandwidth (kHz)	Frequency	Displayed
25	118.00000	118.000
8.33	118.00000	118.005
8.33	118.00833	118.010
8.33	118.01666	118.015
25	118.02500	118.025
8.33	118.02500	118.030
8.33	118.03333	118.035
8.33	118.04166	118.040
25	118.05000	118.050
8.33	118.05000	118.055
8.33	118.05833	118.060
8.33	118.06666	118.065
25	118.07500	118.075
8.33	118.07500	118.080
8.33	118.08333	118.085
8.33	118.09166	118.090
25	118.10000	118.100
8.33	118.10000	118.105
This format is continued through to 136.990		
8.33	136.99166	136.990

2.12 PAR200B Pin assignments

J1	Function	J2	Function
1	No Connect	1	Pilot Phones Low
2	No Connect	2	Copilot Phones Low
3	No Connect	3	Copilot Phones (L)
4	No Connect	4	Copilot Phones (R)
5	No Connect	5	Lights Low
6	No Connect	6	12/28 V Lights
7	No Connect	7	12/28 V Lights
8	No Connect	8	Aircraft Power (11-33 VDC)
9	Com 1 Audio	9	Aircraft Power (11-33 VDC)
10	Com 1 Audio Low	10	Aircraft Ground
11	Com 1 Mic	11	Aircraft Ground
12	Com 1 Mic Key	12	Radio On Control
13	Com 2 Audio	13	Music 2 Mute Inhibit
14	Com 2 Audio Low	14	Music 2 Mute Inhibit Low
15	Com 2 Mic	15	Unswitched #4
16	No connect	16	Pilot Phones (L)
17	Nav 1 Audio	17	**RS232 RXD**
18	Nav 1 Audio Low	18	No connect
19	Nav 2 Audio	19	No connect
20	Nav 2 Audio Low	20	Swap
21	No Connect	21	Swap Low
22	Unswitched #3 Low	22	Music 1 All Headsets
23	No Connect	23	Music 1 (L)
24	No Connect	24	Music 1 (R)
25	**COM 2 Select**	25	Music 1 Low
26	**COM 2 SEL GND**	26	Music 2 (L)
27	No Connect	27	Music 2 (R)
28	No Connect	28	Music 2 Low
29	Unswitched #3	29	**RS232 TX**
30	Com 2 Mic Key	30	**+12 VDC Radio In**
31	Unswitched Audio 1	31	Pilot Phones (Rt)
32	Unswitched Low	32	Copilot Mic Audio
33	Pilot Mic Audio	33	Copilot Mic PTT
34	Pilot Mic PTT	34	Copilot Mic Low
35	Pilot Mic Low	35	Pass 1 Mic [Expansion Audio]
36	No Connect	36	Pass 1 Mic Audio Low [Expansion Low]
37	No Connect	37	Pass 2 Mic Audio [Expansion Power]
38	No Connect	38	Pass 2 Mic Audio Low
39	No Connect	39	No Connect
40	Pass HP (L) [Expansion Out]	40	Unswitched #4 Low
41	Pass HP (R) [Expansion Out R]	41	No Connect
42	Pass HP Low	42	**+12 VDC Radio Low**
43	Unswitched 2 Low	43	**Speaker Ground**
44	Unswitched 2 Audio	44	**Speaker Output**
Items in [brackets] indicate PAR200B with expansion version, 050-228-0302			

2.13 Post Installation Checkout

After wiring is complete, verify power is ONLY on pins 8, and 9 of the J2 and airframe ground on connector pins 10, and 11. Failure to do so will cause serious internal damage and void PS Engineering's warranty.

2.14 Unit Installation

To install the PAR200B, gently slide the unit into the mounting rack until the hold-down screw is engaged. While applying gentle pressure to the face of the unit, tighten the 3/32" hex-head in the center of the unit until it is secure. DO NOT OVER TIGHTEN.

CAUTION

Apply steady pressure to the bezel while screwing the unit into the tray to ensure even seating of the unit and connectors.

WARNING

Do not over-tighten the lock down screw while installing the unit in tray. **Internal damage will result.**

2.15 Operational Checkout

NOTE

The *IntelliVox*® is designed for ambient noise levels of 80 dB or above. Therefore, some clipping may occur in a quiet cabin, such as without the engine running, in a hangar. This is normal.

1. Apply power to the aircraft and avionics.
2. Plug headsets into the pilot, copilot, and occupied passenger positions.
3. Verify fail-safe operation by receiving and transmitting on com 1 from the pilot position, with the audio panel power off. The Com audio will be present in one ear cup only.
4. Switch on the unit by pressing the volume (VOL) knob.
5. Check intercom operation.
6. Push the Com 1 Xmt select button (X1, lower row).
7. Verify that both the **X1** and **X2** buttons light. Verify that transmit button LED (Light Emitting Diode) near the mic selector is not blinking. If the LED is blinking, stop testing and troubleshoot the microphone PTT installation.
8. Verify proper transmit and receive operation from the copilot position, noting that the copilot PTT switch allows proper transmission on the selected transceiver. Verify that the X1 Xmt button blinks when transmitting.
9. Verify that pushing the **C2** button causes the button to illuminate, and the Com 2 receiver to be heard. Verify operation on Com 1 from the pilot position.
10. Repeat for Com 2
11. Press and hold the Com1 Xmt (X1) button. While holding the Com 1 button, press the Com 2 Xmt (X2) button. This places the unit in "Split Mode;" Verify that the pilot can transmit and receive on Com 1, while the copilot transmits and receives on Com 2.
12. Verify proper operation of all receiver sources by selecting them using the appropriate means. The N1 and N2 indicators illuminate to show which navigation audio source is in use.
13. Verify that the appropriate LED in the lower button row blinks when either push to talk is keyed.
14. Verify proper Intercom system operation in the **ALL, ISO** and **CREW** modes (see Table 3-1).
15. Verify that the audio selector panel system does not adversely affect any other aircraft system by systematically switching the unit on and off, while monitoring the other avionics and electrical equipment on the aircraft.

2.15.1 TY91 Checkout

2.15.1.1 Ground check:

1. Connect an in-line type watt meter and verify that the antenna VSWR does not exceed 2:1 across the frequency band from 118.000 to 137.000 MHz

2. Select the frequency of a local communications facility and verify that the receiver output is clear and intelligible.
3. Establish communication with a local facility and verify that the transmission is reliable, and quality is clear and intelligible. Verify that sidetone is present for the appropriate crewmembers and passengers (depending on intercom mode).
4. If appropriate, verify selection of 8.33 kHz channel selection. Refer to §2.11.2.1.

2.15.1.2 Flight check:

1. Maintain at least 1500 feet AGL, and establish reliable contact with a facility at least 25 nm away.
2. Contact a facility within five nm and verify reliable contact.
3. Open the radio receiver by setting the squelch to OFF (a long press on the top line-select button), and listen for any unusual electrical noise that might reduce the communications receiver sensitivity.
4. Verify operation at both high and low end of the frequency band (118.000 to 136.975 MHz) if possible.

2.15.2 TELEPHONE Checkout

On the ground (not flying), activate the TELEPHONE mode using the Bluetooth device. Verify that the pilot headset is connected to the cellular telephone system (if installed). Verify that by using the pilot side PTT, the pilot can transmit on the other selected radio (Com 1 or Com 2). The telephone function will place any person heard by the pilot on the intercom, on the telephone.

2.16 Final Inspection

Verify that the wiring is bundled away from all controls and no part of the installation interferes with aircraft control operation. Move all controls through their full range while examining the installation to see that no mechanical interference exists. Verify that the cables are secured to the aircraft structure in accordance with good practices, with adequate strain relief. Ensure that there are no kinks or sharp bends in the cables and coaxial cables. Verify that the cables are not exposed to any sharp edges or rough surfaces, and that all contact points are protected from abrasion.

Return completed warranty registration application to PS Engineering, or complete online at www.ps-engineering.com.

Section III OPERATION

3.1 SCOPE

This section provides detailed operating instructions for the PS Engineering PAR200B, Audio Selector Panel/Intercom/VHF Communication Control Systems. Please read it carefully before using the equipment so that you can take full advantage of its capabilities. Figure 3-1 PAR200B Operating controls

The following is divided into sections covering the basic operating areas of the PAR200B systems. They are Communications Transceiver Selection, Audio Selector, Intercom, VHF COM, music, telephone, and display.

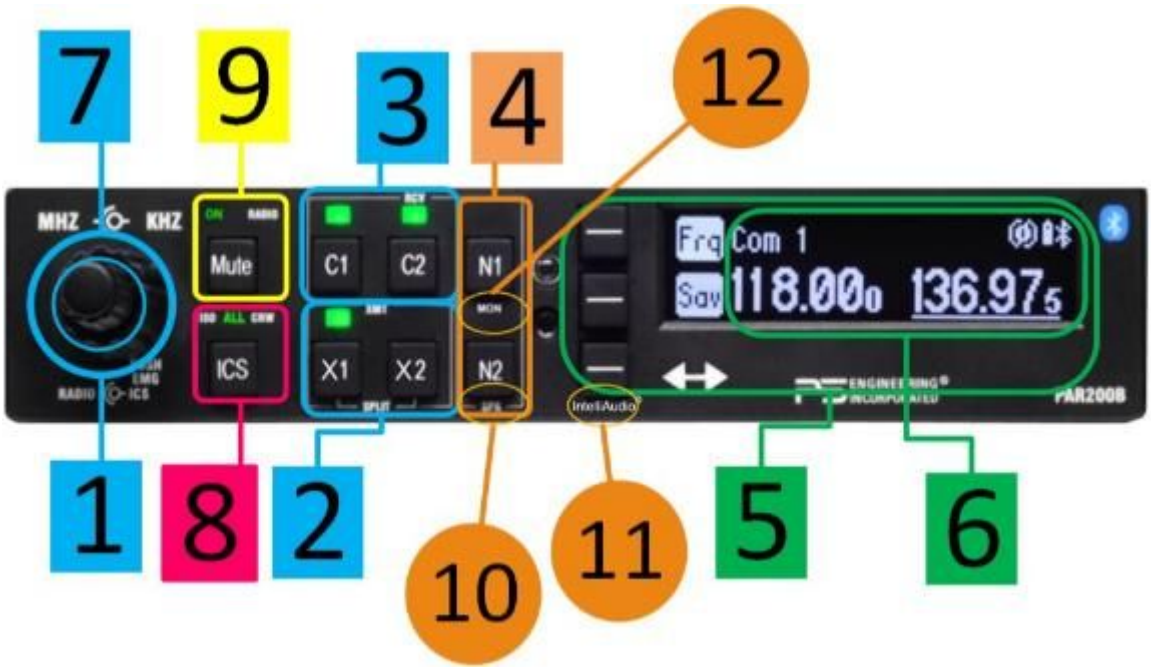

Figure 3-2 Operating Controls

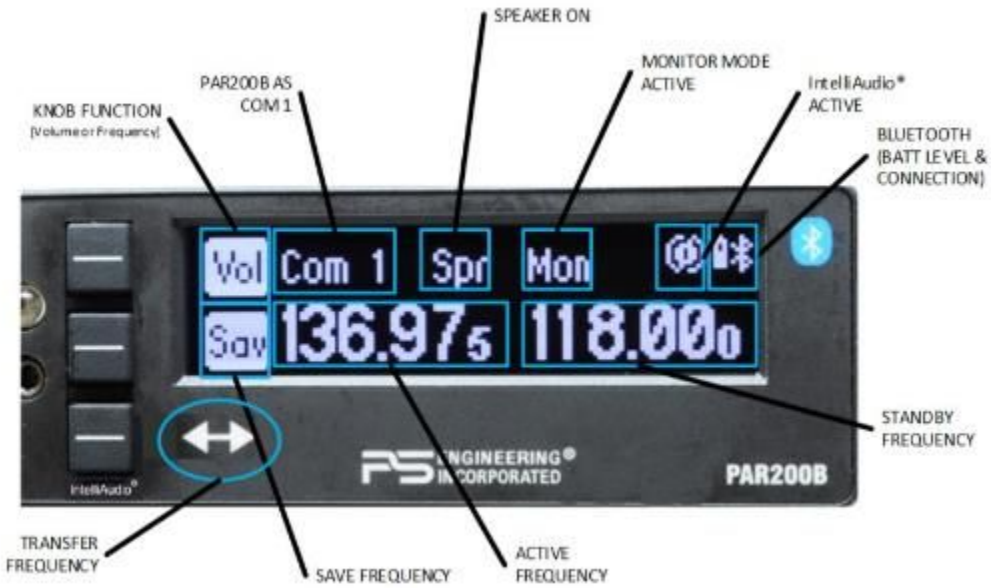

Figure 3-3 Display Icons (5)

3.1.1 Icons and second functions

Several of the buttons have second functions that are activated by a long button press. These are:

Button	Label	See Section	Function	Display
N1	MON	§3.7.2	Activates COM monitor mode	Mon
N2	SPR	§3.6	Turns cockpit speaker on or off	Spr
Bottom Line-select	IntelliAudio®	§3.4.1	Turns IntelliAudio® on or off	
Top line-select	Short Press	§3.2.2 §3.7.1	Toggle between Frequency and Volume	Frq Vol
	Long Press	§3.7.1	Activates Radio Menu	
Center Line-select		§3.7.1	Switches from Recall to Save mode	Rcl Sav

3.2 Power and Fail Safe (1)

Unit power is turned on and off by pushing the smaller volume knob. In the OFF or "**EMG**" position, the pilot headset is connected directly to Com 1 as well as unswitched input #1. This allows communication capability regardless of unit condition. Any time power is removed or turned OFF; the audio selector portion will revert to fail-safe mode.

The power switch controls all audio selector panel functions and the intercom. All pushbutton selections and menu modes (except Bluetooth telephone association) will be remembered and return to the last state when turned on.

3.2.1 TY91(L) Radio power (as single radio or COM 1 only)

The power supply for the TY91 communication transceiver is separate from the audio panel power and control. When the TY91 is installed as COM 1, or as a stand-alone COM, it can be controlled separately in the event of a problem in the audio panel portion, or audio panel power.

If the audio panel is turned off by the left knob (or the audio panel breaker is opened), the display will indicate, "COM Shutdown in X seconds." If **Cancel** (bottom line-select button) is **not** pushed, the com radio will also turn off, but if the Cancel line-select button is pushed within the time limit, the radio display, volume and frequency control will remain active.

Figure 3-4 COM 1 Shutdown message

3.2.1.1 Radio Power, TY91(L) as COM 2

If the Trig TY91 is configured as Com 2, it will turn off when the audio panel is off, and the pilot will be connected directly to Com 1.

3.2.2 ICS and Radio Volume Controls (1)

The small inner knob (ICS) controls the volume of the intercom audio. It does **not** affect the radio, telephone, or music volume.

Press the top Line-Select button so that Vol appears next to the button. The outer knob (RADIO) controls the volume of the Trig TY91 COM transceiver.

Adjust the radio and intercom volume for a comfortable listening level. Most general aviation headsets today have built-in volume controls; therefore, volume also can be further adjusted at the individual headset.

3.3 Communications Transmit (XMT) Selection (2)

The two buttons **X1** and **X2** (# 2) in the **XMT** section control which communications radio is selected for transmit. The top row of pushbuttons (# 3) allows selection of the **C1** (COM 1) or **C2** (COM 2) receiver audio. Push the lower button to select the desired COM transmitter. A green LED above the button illuminates to indicate that the audio is selected.

The PAR200B-Series has an automatic com receiver selector system. Audio from the selected transceiver is automatically heard in the headsets and speaker (if selected). You can check this function by switching from Com 1 transmitter to Com 2 transmitter by pressing the COM 2 transmitter selector pushbutton. See that the associated Com 2 receive pushbutton indicator light that is located immediately above the Com 2 transmitter pushbutton turns green. This guarantees that the pilot will *always* hear the audio from the transceiver selected for transmit.

The PAR200B "remembers" the receiver selection, so that when switching transmitters from COM 1 to COM 2, if COM 2 audio was previously selected, COM 1 audio will continue to be heard. This eliminates the pilot having to switch Com 1 audio back on, after changing transmitters.

When switching from COM 1 to COM 2 while Com 2 was not previously selected, COM 1 audio will be switched off. In essence, switching the mic selector will not override prior selection of COM receiver audio.

3.3.1.1 Split Mode

The split mode can be activated at any time by pressing the **X1** and **X2** **XMT** buttons at the same time. This places the pilot on COM 1 and the Copilot on COM 2.

Pilot on COM 2 and Copilot on COM 1 is not possible.

NOTE

Due to the nature of VHF communications signals, and the size constraints in general aviation aircraft, it is probable that there will be some bleed-over in the Split mode, particularly on adjacent frequencies. PS Engineering makes no warranty about the suitability of Split Mode in all aircraft conditions.

3.3.1.2 Swap Mode (Switch from Com 1 to Com 2 remotely)

With a yoke mounted, normally open momentary switch, the pilot can change from the current Com transceiver to the other by depressing this switch. To cancel "Swap Mode," the pilot may either press the yoke mounted switch again, or select a different Com with the XMT buttons.

3.4 COM Receive Audio Selector (3)

Communication audio from the other radio, not selected for transmit, can be heard by pressing the associated RCV button. You will always hear the audio from the selected transceiver.

In SPLIT mode, only the pilot will hear selected navigation audio (N1 & N2).

3.4.1 IntelliAudio® Dimensional Audio (11)

COM 1 and COM 2 receiver audio signals are processed to "appear" in different locations to the crew. COM 1 will appear at 10:00 o'clock position and COM 2 at 2:00 o'clock position. This helps the crew to better comprehend speech by locating it in a manner more easily differentiated by the human brain.

To activate the IntelliAudio mode, press and hold the bottom line-select button next to the transfer arrow for about 1 second, until the icon appears.

Figure 3-5 IntelliAudio activation

Intercom and other audio are not spatially processed, only the pilot and copilot VHF COM audio.

You must use stereo headsets, in stereo mode for this feature.

3.5 Navaid Audio selection (4)

VHF Navigation receiver audio is selected through two momentary, push-button, backlit switches.

The users can identify which receivers are selected by noting which green LEDs are lit above the button. Navigation aid audio push buttons are labeled N1 & N2.

Other audio sources such as Marker Beacon, ADF or DME audio if installed are available if interfaced through an unswitched input.

3.6 Cockpit Speaker (10)

When the cockpit speaker is turned on, any receiver audio selected will be heard in the speaker. Any unswitched audio will always be present in the cockpit speaker regardless of the speaker on/off selection.

To activate the cockpit speaker, push and hold the **N2** button for two seconds, until the display **SPR** is ON. Repeat to toggle speaker OFF again.

Figure 3-6 Cockpit Speaker Control

3.7 VHF Transceiver control (6)

The PAR200B is a dedicated control of the Trig TY91(L) VHF communications transceiver. Direct frequency selection is always directed to the STANDBY side of the display.

To defeat the automatic radio squelch, push and hold the top line-select button until the radio menu appears. Then turn the small knob counterclockwise until the Squelch display reads Off. Squelch will reset to with power cycle, or radio PTT.

3.7.1 Frequency Selection (6)

If int in **Frq** mode already, push the top Line-Select button to toggle from **Vol** to **Frq**. Turn the large (outer) knob to change the Standby MHz, and the smaller, inner knob to change the standby KHz frequency.

Push the lower line select button momentarily to transfer standby frequency to the active frequency.

Figure 3-7 Frequency Selection

3.7.1.1 Frequency Memory Storage

The PAR200B will store five frequencies for future recall.

To store frequencies:

1. Enter the desired frequency it the **STBY** frequency.
2. Push the middle line select button, adjacent to the **Sav** icon.
3. Push the middle line select button to save in the location shown.
4. When a frequency has been saved, the **Sav** button becomes **Rcl** for Recall.
5. Use knob to select save location if desired. Push "Save" to overwrite or Insert to insert in new location.
6. Continue to enter frequencies as desired, then hold the **Rcl** button for 1 second, until the display switches to the "Save" as shown.

To recall stored frequencies:

1. Press the center line-select button next to the **Rcl** icon.
2. Using either of the knobs, select the desired location.
3. Push the center line-select button to accept this as **Active** frequency.

Figure 3-8 Frequency Store

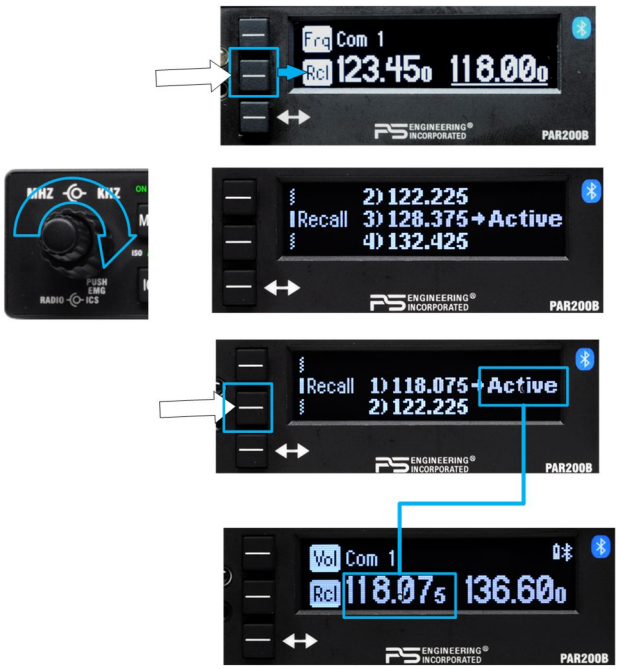

Figure 3-9 Frequency Recall

3.7.1 Radio Sidetone & Radio Squelch Adjustment

To change the automatic squelch threshold and sidetone level for the Trig TY91 transceiver: Enter the Radio Volume mode by pressing the top line select (or ICS) button until the setup screen appears.

Figure 3-10 Radio Controls menu

Select the middle line-select button and turn the smaller knob to set the squelch threshold between Off and 10. Set the value as desired, lower numbers (weak signals open), medium range (normal operation) or high numbers (blocks RF noise, requires stronger signals to open).

Select the middle line-select button and turn the smaller inner knob to increase or decrease the radio sidetone as desired. Typically, the radio sidetone is adjusted slightly lower volume than the received radio signals.

3.7.2 Monitor Mode (12)

To activate the monitor mode, press and hold the **N1** button until "**MON**" appears in the display.

Figure 3-11 Monitor indication

When MON is active, the receiver is tuned to the Standby frequency and passes received audio on that channel. When the Active frequency receives a signal, the signal from the active frequency is automatically provided to the audio.

Both active and standby frequencies are monitored at the same time for a signal. A signal can be received on either the active or the standby frequency.

While receiving a signal on the active frequency - the standby channel is **NOT** monitored.

While receiving a signal on the standby frequency - the active channel is periodically monitored. If a signal is found on the active frequency, the **TY91** will revert to the active frequency. After a signal has been received, the **TY91** will return to monitoring both frequencies.

The standby monitoring frequency sends an audible "ticking" to make you aware which is the active & standby. It will be important to remember which frequency is active and which is standby, to avoid answering a transmission on the standby frequency by transmitting a response on the active frequency.

3.7.3 Tuning 8.33 kHz channel Spacing

Hold the top line select button for 1 second, which will show the radio menu. Press again to toggle between either 25 kHz spacing or 8.33 kHz spacing. This will be indicated on the OLED screen when the trailing digit on the 0.000 MHz is full size. As in the PAR200A, if the ICS button is held for 1 second, the radio menu will also appear.

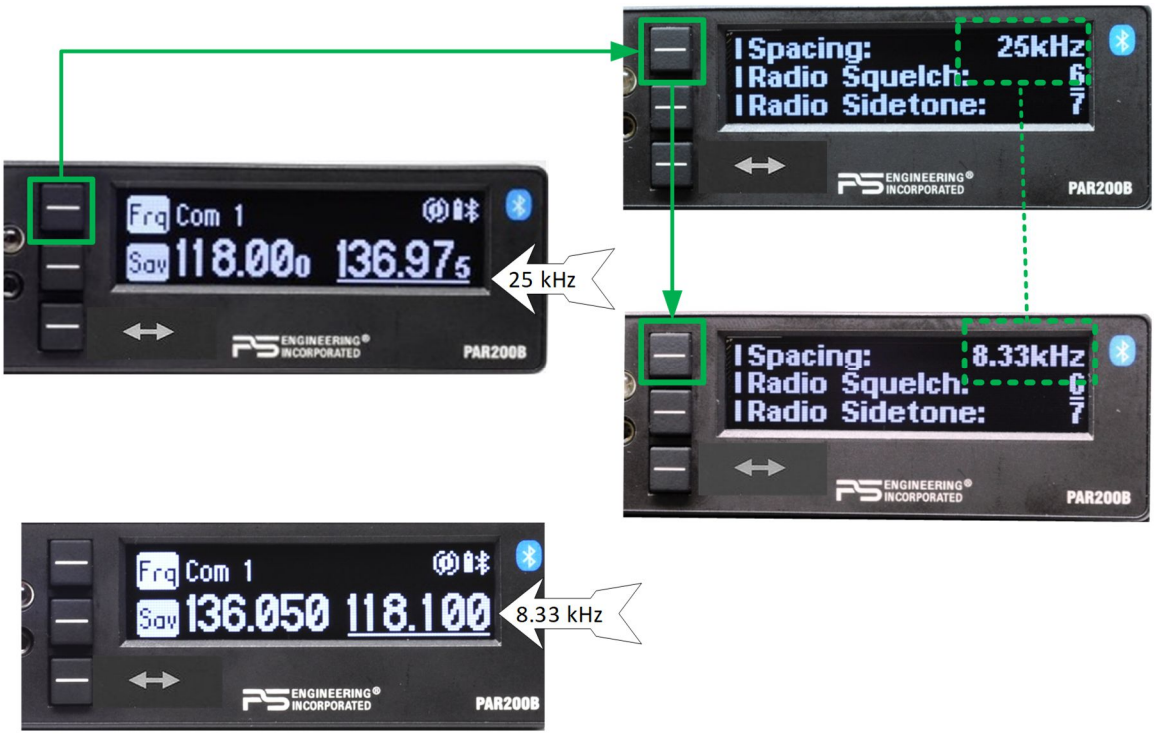

Figure 3-12 Channel Spacing switching

3.7.3.1 Channel Assignments:

The following table provides an example of the 8.33 Channel assignments as displayed on the PAR200B, *when in the 8.33 mode*.

Bandwidth (kHz)	Frequency	Displayed
25	118.00000	118.000
8.33	118.00000	118.005
8.33	118.00833	118.010
8.33	118.01666	118.015
25	118.02500	118.025
8.33	118.02500	118.030
8.33	118.03333	118.035
8.33	118.04166	118.040
25	118.05000	118.050
8.33	118.05000	118.055
8.33	118.05833	118.060
8.33	118.06666	118.065
25	118.07500	118.075
8.33	118.07500	118.080
8.33	118.08333	118.085
8.33	118.09166	118.090
25	118.10000	118.100
8.33	118.10000	118.105
This format is continued through to 136.990		
8.33	136.99166	136.990

3.8 Intercom Operation (8)

3.8.1 *IntelliVox*® VOX-Squelch

No manual adjustment of the *IntelliVox*® squelch control is possible. Through individual signal processors, the ambient noise appearing in all four microphones is constantly being sampled. Non-voice signals are blocked. When someone speaks, only their microphone circuit opens, placing their voice on the intercom. The intercom can be configured for high noise environment by internal switching. See § 2.9 for more information.

The system is designed to block continuous tones; therefore, people humming or whistling in monotone may be blocked after a few moments.

For consistent performance, any headset microphone **must** be placed within ¼-inch of your lips, preferably against them. (Ref: *RTCA/DO-214, 1.3.1.1 (a)*).

NOTE

It is also a good idea to keep the microphone out of a direct wind path. Moving your head through a vent air stream may cause the *IntelliVox*® to open briefly. This is normal.

The *IntelliVox*® is designed to work with normal aircraft cabin noise levels (70 dB and above). It loves airplane noise! Therefore, it may not recognize speech and clip syllables in a quiet cabin, such as in the hangar, or without the engine running. This is normal.

For optimum microphone performance, PS Engineering recommends installation of a Microphone Muff Kit from Oregon Aero (1-800-888-6910). This will not only optimize VOX performance, but will improve the overall clarity of *all* your communications.

Table 3-1 Mic Muff ™ Part Numbers

Manufacturer	Model	Mic Muff™ Part Number
Bose	Dynamic Electret M87 Dynamic	90010 90015 90020
David Clark	H10-30 H10-20, H10-40 H10-13.4	90010 90015 90015
Lightspeed	All	90015
Peltor	7003 7004	90010 90015
Pilot	11-20 & 11-90	90015
Sennheiser		90015
Telex	Airman 750, Echelon AIR3000	90015 90010

3.8.2 Mono headsets in Stereo Installation

The pilot and copilot positions work with stereo or mono headsets. However, IntelliAudio will not be presented correctly unless stereo headsets are used, and oriented correctly on the head, left and right.

NOTE: For the full effect of IntelliAudio® Dimensional Sound, stereo headsets *must be used*, and the left/right orientation observed.

All *passenger* headsets are connected in parallel. Therefore, if a monaural headset is plugged in to a PAR200B Stereo installation, one channel will be shorted. Although no damage to the unit will occur, all passengers with stereo headsets will not hear one channel, unless they switch to the "MONO" mode on their headset.

NOTE: Mono headsets that short the tip and ring (i.e. older models) will introduce some audio distortion when used. Modern, stereo headsets are recommended in all positions.

3.8.3 Intercom Modes (8)

The "**ICS**" pushbutton switch on the left side of the panel provides the selection of the three intercom modes.

This button cycles through the intercom modes, from left to right, then right to left as: ISO, ALL CRW and CRW, ALL, ISO. An LED behind the text shows which mode is currently active.

ISO: The pilot is isolated from the intercom and is connected only to the aircraft radio system. He will hear the aircraft radio reception (and sidetone during radio transmissions). Copilot will hear passengers' intercom and music, while passengers will hear copilot intercom and music. Neither copilot nor passengers' stations will hear aircraft radio receptions or pilot transmissions.

When the audio panel is put into the "Split Mode" (pilot on COM 1, copilot on COM 2), the intercom automatically enters the ISO mode to prevent confusion with two intercom conversations. The intercom can be changed to the CRW mode if desired. This allows the crew to have intercom communication while passengers are on a separate intercom channel.

ALL: All parties will hear the aircraft radio and intercom. Crew and passengers will hear selected music. During any radio or intercom communications, the music volume automatically decreases. The music volume increases gradually back to the original level after communications have been completed.

CREW: Pilot and copilot are connected on one intercom channel and have exclusive access to the aircraft radios. They may also listen to Music 1. Passengers can continue to communicate with themselves without interrupting the Crew and may listen to music as configured.

3.9 Bluetooth operation

3.9.1 Bluetooth Telephone Connection

Before the PAR200B can be used in TELEPHONE mode with a wireless Bluetooth connection, the unit must be associated with a specific phone.

Activate the "seek device" function on the cell phone (if required, enter the access code "**0000**") when the phone detects the "PAR200B" on the list of available devices.

This process will be necessary for any phone to be used, and only one cell phone can be associated with the audio panel at a time. If the additional phones are associated with the PAR200B at the same time, only the *first* phone will transfer audio to the panel.

If the Bluetooth connection fails to reconnect, or becomes unreliable for any reason, you can reset all connections through the user setup menu. See §3.13.2. This clears out all paired devices.

PS Engineering recommends this clearing process if you are having difficulties interfacing the PAR200B audio panel to your Bluetooth phone or device.

3.9.2 Telephone (TEL) Operation

When the Bluetooth-enabled phone receives an incoming call, the PAR200B will play the ring tone from your phone. Answer the call by pushing the top line select button. The PAR200B exits the telephone mode automatically when the cellular phone hangs up, or the bottom line-select button is pushed.

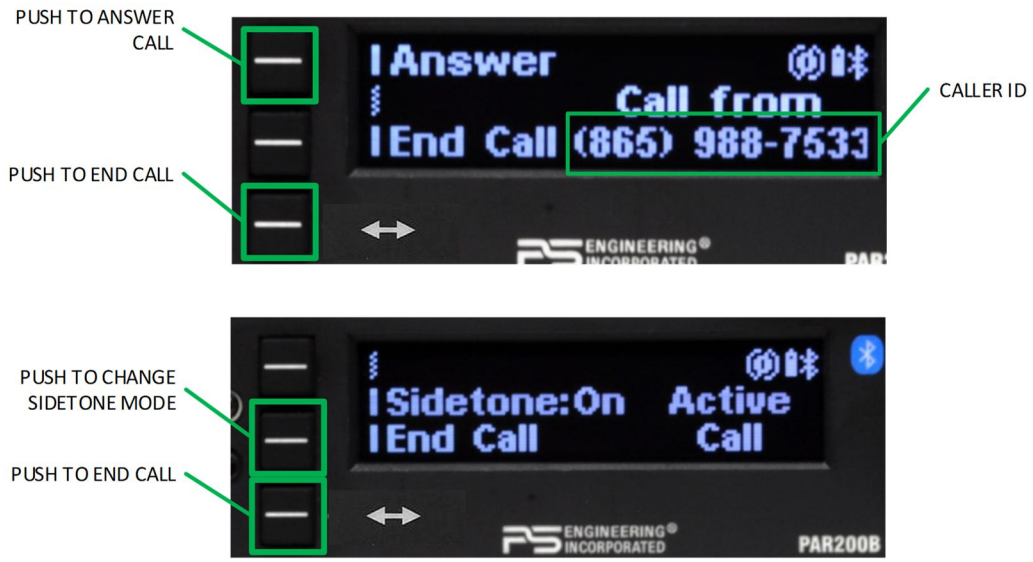

Figure 3-13 Bluetooth Telephone Operation

In TELEPHONE mode, the pilot microphone and headphones are connected to the cell phone. The pilot PTT will switch the pilot mic to the selected com transceiver, and allow continued aircraft communications to continue.

The copilot will also be able to transmit on the other selected radio with his PTT as well.

Entering the TEL mode connects the telephone to the users as follows:

In **ALL** intercom mode, all crew and passengers will be heard on the phone when they speak. Com and other selected radio audio are also heard in the headsets. If the pilot or copilot pushes the radio PTT, their microphone will be transferred to the selected Com radio. The telephone party will not hear ATC communications, and vice versa.

In **CREW** mode, only the pilot and copilot are connected to the telephone. Passengers will not hear the telephone. The pilot and copilot will also have transmit capability on the other selected transceiver.

In **ISO** intercom mode, when the PAR200B is in the **TEL** mode, the pilot position is in the "Phone Booth." Only the pilot will hear the telephone, and only he will be heard. He will also have access to Com 1 or 2, and will transmit on that radio using the PTT. All selected audio is provided to the pilot. Pilot will **not** have telephone sidetone in Isolate mode.

3.9.2.1 Telephone Sidetone

Most cell phones do not provide sidetone (your voice in the headset when speaking). The PAR200B provides this sidetone from the factory. If your phone does provide sidetone, and the sound is distorted, pushing the middle line-select button will turn it off, while on a call. This setting is remembered.

WARNING

Federal Communications Commission regulation 47 CFR 22.925 prohibits the use of 800MHz Cellular handsets in any aircraft that is airborne. Violation of this rule could result in suspension of service and/or a fine.

3.10 Music Mode Menus (9)

Press and hold the "Mute" button for 1 second, until the music menu appears.

Using the line select buttons, chose either Music Mute Menu or Music Distribution.

Figure 3-14 Music Distribution and Muting menus

3.11 Music Muting (9)

There are two SoftMute™ muting circuits. The front panel "Mute" button controls the pilot's music.

The SoftMute™ circuit will cut the music out whenever there is conversation on the radio or the intercom, depending on the "Mute" mode selected. When that conversation stops, the music returns to the previous level comfortably, over a second or so.

The Pilot's Music mute functions are controlled through sequential pushes of the Mute button, with LED indication of the mode selected.

MUTE ON - music **will** mute with *either* intercom *or* radio –ON button is lit.

RADIO MUTE – Intercom will **not** mute music, radio *will* mute music. RADIO LED indicator is on

MUTE OFF - "Karaoke" mode - music will not mute except during outgoing transmissions. - All Indicators off.

The passenger's intercom also has a SoftMute™ circuit. If the passengers hear the radio, or talk on the intercom, the music will mute. If the audio panel is in CREW mode, then the radio reception will not affect the passenger music.

3.11.1.1 Music 2 Mute Control

Passengers can have access to their own Karaoke Mode control hardwired to the audio panel connector. If installed it will override the front panel music mute control for the passengers. If the passengers are listening to the music 2 input, their Karaoke Mode can be activated by an external switch. See § 2.7.2.1.

3.12 Inputs

The PAR200B has two independent music inputs at the rear connector, Music #1 & #2. The PAR200B also has the ability to receive streaming music from a Bluetooth-enabled device which is also Music #1. If both inputs (Music #1 & Bluetooth) are active, both will be heard in the headset at the same time, there is not any prioritization.

Pilot- Will only have the option to hear Music #1/Bluetooth.

In split mode copilot will not hear any music inputs, pilot can still monitor music #1/Bluetooth and passengers can select the music source of their choice. Passengers can select either music input while the audio panel is selected to split mode.

Music #1/Bluetooth can also be distributed to all headsets by using an external switch (J2 pin 22) to place in all heads. the passengers using the rear connector control (See § 2.7.1.1). The streamed Bluetooth music in the PAR200B is also Music 1.

NOTE:

All music devices should be turned off for takeoff, landing, or any critical phase of flight. FAA Regulation 14 CFR 91.21 restricts the use of portable electronic devices.

§91.21 "(a) Except as provided in paragraph (b) of this section, no person may operate, nor may any operator or pilot in command of an aircraft allow the operation of, any portable electronic device on any of the following U.S.-registered civil aircraft. . .

"(b) (5) Any other portable electronic device that the operator of the aircraft has determined will not cause interference with the navigation or communication system of the aircraft on which it is to be used."

You can refer to Advisory Circular 91.21-1A for more information, at http://www.faa.gov

3.13 User Setup Functions

To access the user setup menu:

1. Turn the PAR200B off by pushing the left knob, and allowing the unit to shut down.
2. Turn the PAR200B back on.

3. As soon as the PAR200B screen appears (after a brief logo slash screen), push the *bottom* line-select button to switch into setup mode.
4. Select the function using the line select buttons.

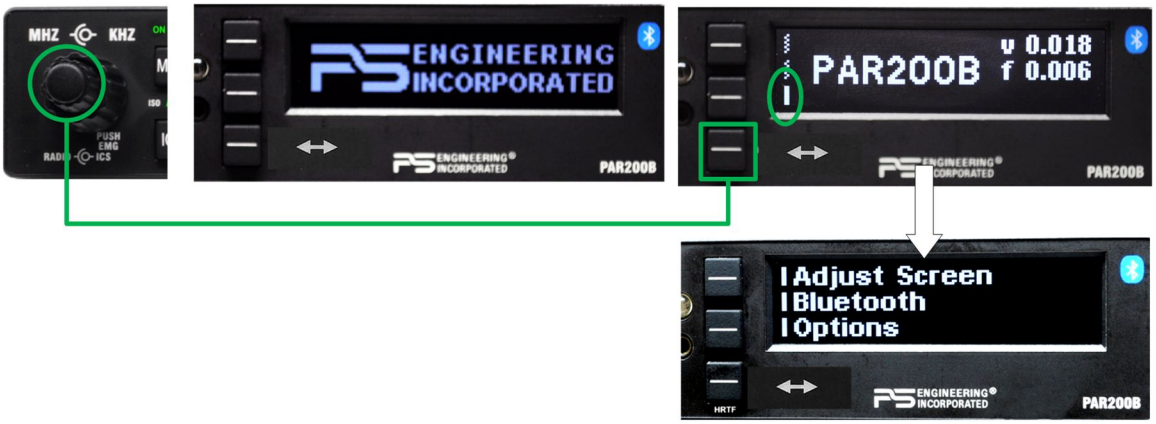

Figure 3-15 Entering User Setup Mode

3.13.1 Display

3.13.1.1 Brightness

The intensity of the OLED can be adjusted by pushing the *top* line-select button, and turning the small knob to set a value from 0 (full dim) to 10 (full bright). Regardless of the setting, the display intensity will also follow the photocell to respond to ambient light.

3.13.1.2 Display Time out

The length of time that a menu stays active can be adjusted by pushing the bottom line-select button, and setting the time from 1 second to 30 seconds. We recommend that the time be longer as you get used to the choices, but can be shorter with familiarity. 10-15 seconds works well for new users.

In addition, holding any line select button for more than one second will revert to the previous menu.

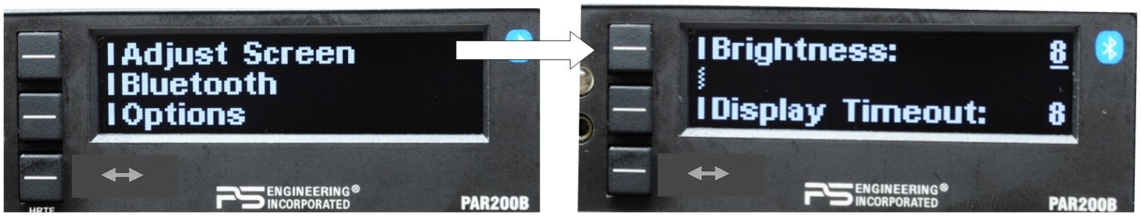

3.13.2 Display Refresh Rate (S/N DPRB1814 & above)

The rate at which the OLED display refreshes or redraws can be adjusted to accommodate the frame rates of various video recorders, in case you want to video the instrument panel, without missing pixels.

From the Adjust Screen menu, adjust the Refresh Rate while watching the screen from your video camera, and select the rate that will provide the best picture quality. The rate is adjustable from 63Hz to 292Hz, the default is 116Hz.

This is available starting with version shown on startup page (v 0.022:

3.13.3 Bluetooth

Pressing the center line select button activates the Bluetooth options menu,

The top button will reset the Bluetooth module, and erase all paired devices. This is useful if you experience any connection issues with the Bluetooth. This can happen when many devices have been paired over time.

After Unpair All is pressed and the Bluetooth module resets, you will need to "Forget" the PAR200B from any devices, and re-pair from the device afresh.

Pressing the center line select button allows you to set a PIN code if your device requires it. Use of a PIN code is not recommended unless your device requires it.

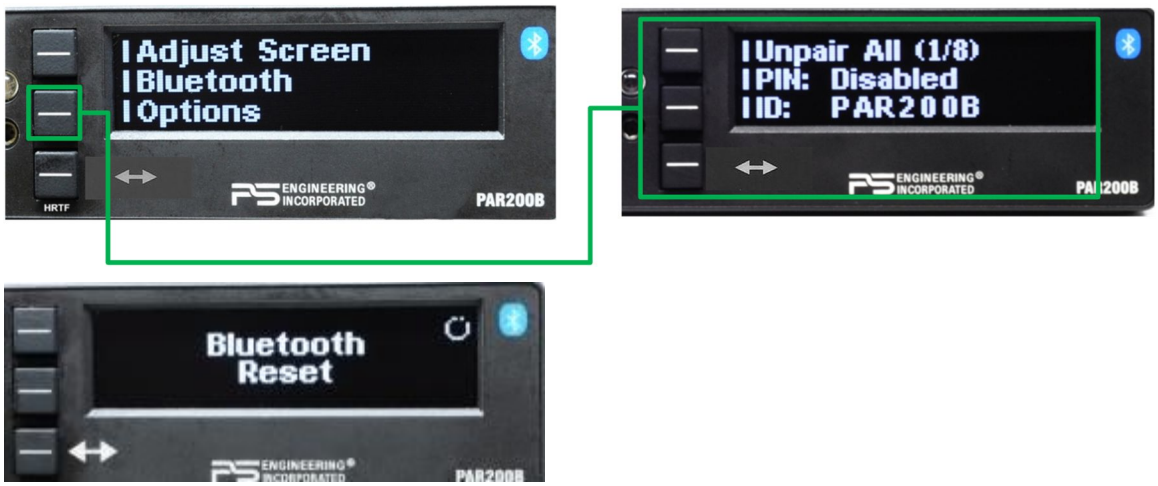

Figure 3-16 Bluetooth Menu Options

3.13.4 Options

There are two user selectable options that affect what the default state of functions will be upon power up.

Recall Mute mode will allow the PAR200B to remember the music muting selection between power cycles when selected **On**. When Recall Mute is **Off**, the PAR200B will revert to "Mute ALL" mode at power on.

Figure 3-17 Music Mute Mode Recall

Knob Default sets the power on default state of the rotary select knobs. In **Frq** mode, the smaller knob controls the kHz while the large knob changes the MHz of the Standby Frequency.

With **Vol** selected, the smaller knob controls the volume of the intercom for all users, while the larger knob adjusts the receive volume of the Trig TY91L transceiver connected to the PAR200B.

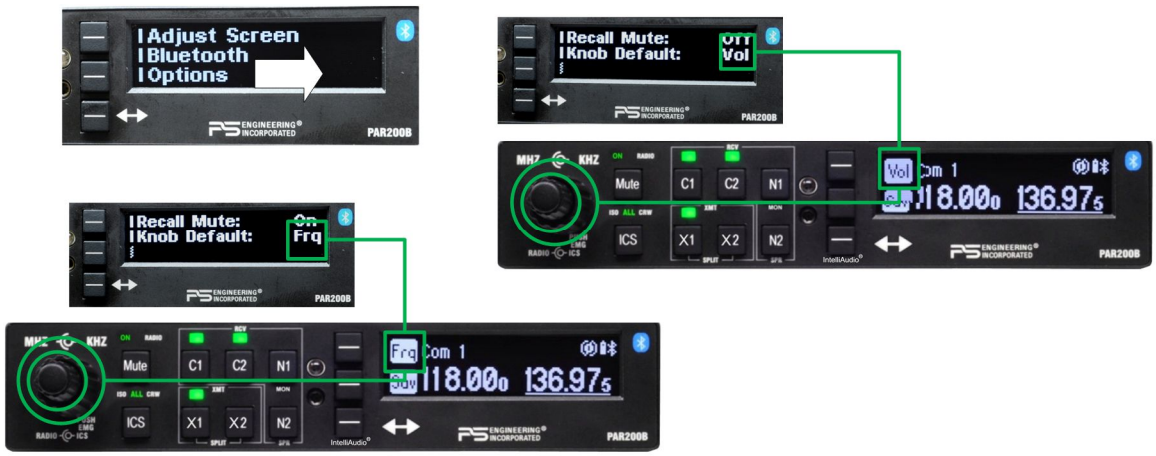

Figure 3-18 Knob Default Selection

Regardless of the power on default function, the knob function selection will be controlled by the top line-select button and remain selected until changed during operation.

Section IV – Warranty and Service

4.1 Warranty

In order for the factory warranty to be valid, new installations **must be accomplished under the supervision of an authorized PS Engineering dealer**. **If the unit is being installed by a non-certified individual in an experimental aircraft, a PS Engineering authorized dealer-made intercom harness must be used for the warranty to be valid**.

Units that are installed into existing compatible plug-and-play installations are covered under this factory warranty.

PS Engineering, Inc. warrants this product to be free from defect in material and workmanship for a period of two (2) years from the date of sale. During the two-year warranty period, PS Engineering, Inc., at its option, will send a replacement unit at our expense if the unit should be determined to be defective after consultation with a factory technician.

All transportation charges for returning the defective units are the responsibility of the purchaser. All domestic transportation charges for returning the exchange or repaired unit to the purchaser will be borne by PS Engineering, Inc. The risk of loss or damage to the product is borne by the party making the shipment, unless the purchaser requests a specific method of shipment. In this case, the purchaser assumes the risk of loss.

This warranty is not transferable. Any implied warranties expire at the expiration date of this warranty. PS Engineering SHALL NOT BE LIABLE FOR INCIDENTAL OR CONSEQUENTIAL DAMAGES. This warranty does not cover a defect that has resulted from improper handling, storage or preservation, or unreasonable use or maintenance as determined by us. This warranty is void if there is any attempt to dissemble this product without factory authorization. This warranty gives you specific legal rights, and you may also have other rights, which may vary from state to state. Some states do not allow the exclusion of limitation of incidental or consequential damages, so the above limitation or exclusions may not apply to you.

All items repaired or replaced under this warranty are warranted for the remainder of the original warranty period. PS Engineering, Inc. reserves the rights to make modifications or improvements to the product without obligation to perform like modifications or improvements to previously manufactured products.

4.2 Factory Service

The units are covered by a two-year limited warranty. See warranty information. Call PS Engineering, Inc. at (865) 988-9800 before you return any unit. This will allow the service technician to provide any other suggestions for identifying the problem and recommend possible solutions.

After discussing the problem with the technician and you obtain a Return Authorization Number, ship product to:

PS Engineering, Inc.
Attn: Service Department
9800 Martel Rd
Lenoir City, TN 37772
(865) 988-9800 FAX (865) 988-6619
Email: support@ps-engineering.com

Units that arrive without an RMA number, or telephone number for a responsible contact, will be returned un-repaired. PS Engineering is not responsible for items sent via US Mail.

Appendix A – External PTT Hook Up

Part of the installation includes the installation of PTT (Push to Talk) switches that allow the use of your aircraft radio for communications transmissions.

There are three possible configurations; you must select the case that best fits your installation.

NOTE: Only the person who presses their PTT switch will be heard over the radio.

CASE I

The PTT is built into the pilot and copilot yokes

Simply install the plugs from the headset into the aircraft headphone jacks. Then use the yoke mounted PTT to transmit. No other action is required.

CASE II

Built in PTT only on the pilot side only

This configuration requires a modified external PTT switch plugged into the copilot's mic jack. (See Details Below) When the copilot's PTT is depressed, this activates an internal relay that switches the mic audio to the aircraft radio from the pilot to the copilot.

Case III

No built in PTT switch at all.

Two built-in PTT must be installed, or two external, modified PTT switches will be required for both the pilot and copilot. Modifications to the PTT are required. (See details below)

Push to Talk Modifications

When received from the manufacturer, an after-market PTT switch opens the mic audio path to the "ring" connection of the PTT mic plug until the button is pressed. When the PTT is between the intercom and the headset, the intercom function will not work unless the PTT switch is depressed. A simple modification can be performed to allow proper intercom operation. NOTE: This mod does not alter normal operation.

Below are some examples of typical modifications. Contact the PTT manufacturer for more details if necessary.

Procedures for David Clark PTT

Unscrew the round black plastic cover from the jack.
Connect the joined black wires to the red wire.
Replace the round black plastic cover.

Procedures for Telex PT-200

Unscrew the round black plastic cover from the jack.
Cut the red wire in the middle of the wire.
Strip both ends of the insulation.
Solder the two ends to the ground lug to the PTT jack.
Replace the round black plastic cover.

Procedures for Telex PT-300

Unscrew the round black plastic cover from the plug jack.
Remove the heat shrink material from the joined black wires.
Solder these two wires to the lug that has a white wire already soldered to it.
Replace the round black plastic cover

Appendix B – PAR200B Installation Drawings

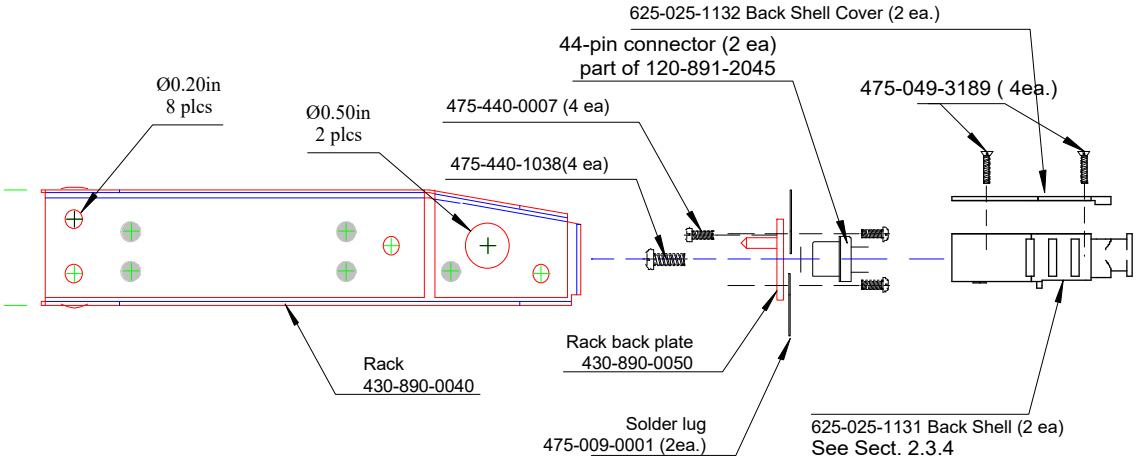

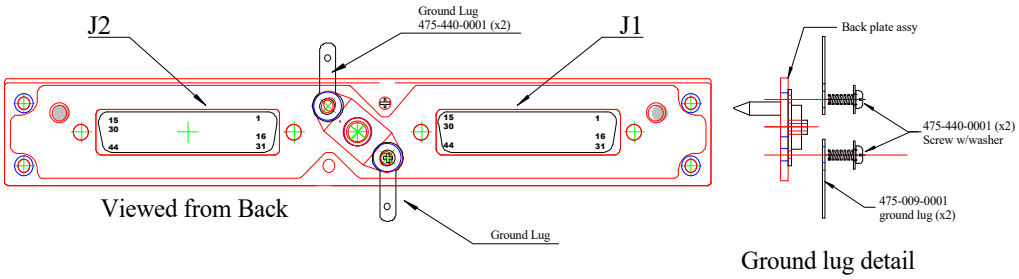

Rear plate detail (not to scale)

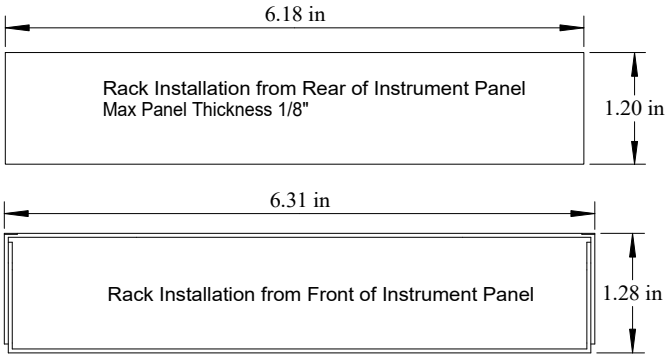

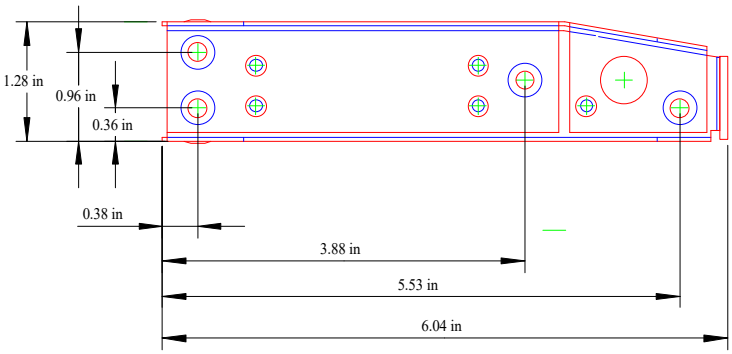

Tray and cutout dimensions

Caution: Apply steady pressure to the bezel while screwing the unit into the tray to ensure even seating of the unit and connectors.

6.1 TY91 Radio Installation Drawings

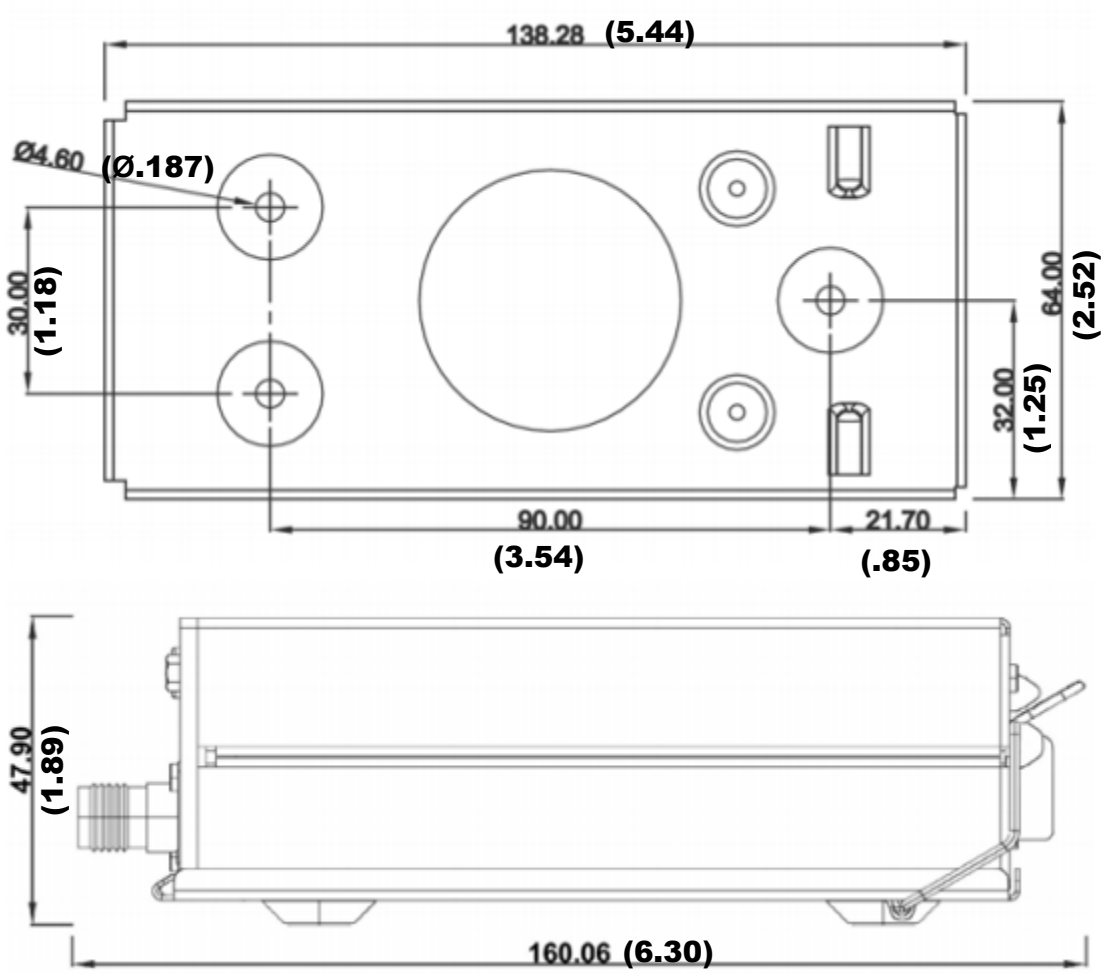

Not to Scale. Dimensions in millimeters, (inches)

Appendix C – J1 Connector Interconnect

Figure 7-1 J1 connections, TY91(L)-05 as COM 2

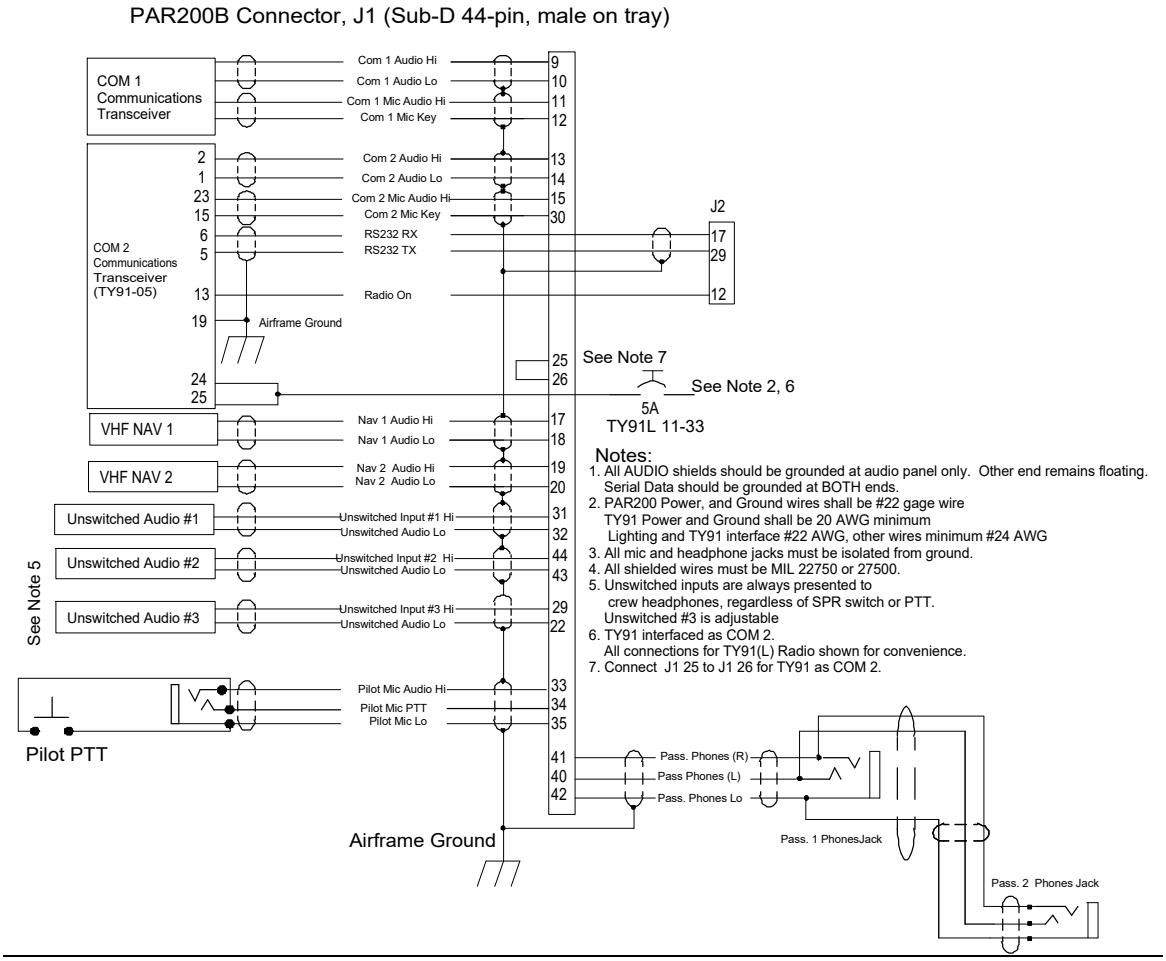

Figure 7-2 PAR200B Using TY91(L) as COM1 or single radio

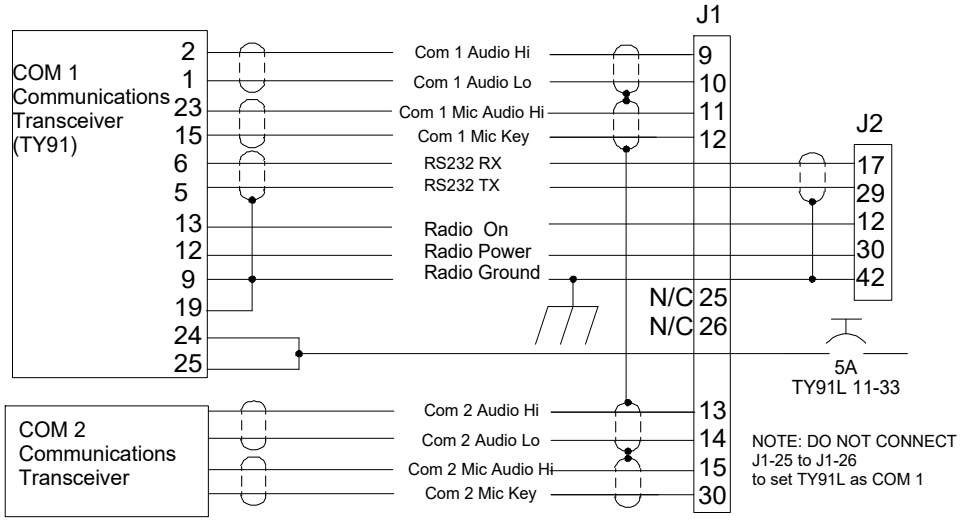

Appendix D – J2 Connector Interconnect

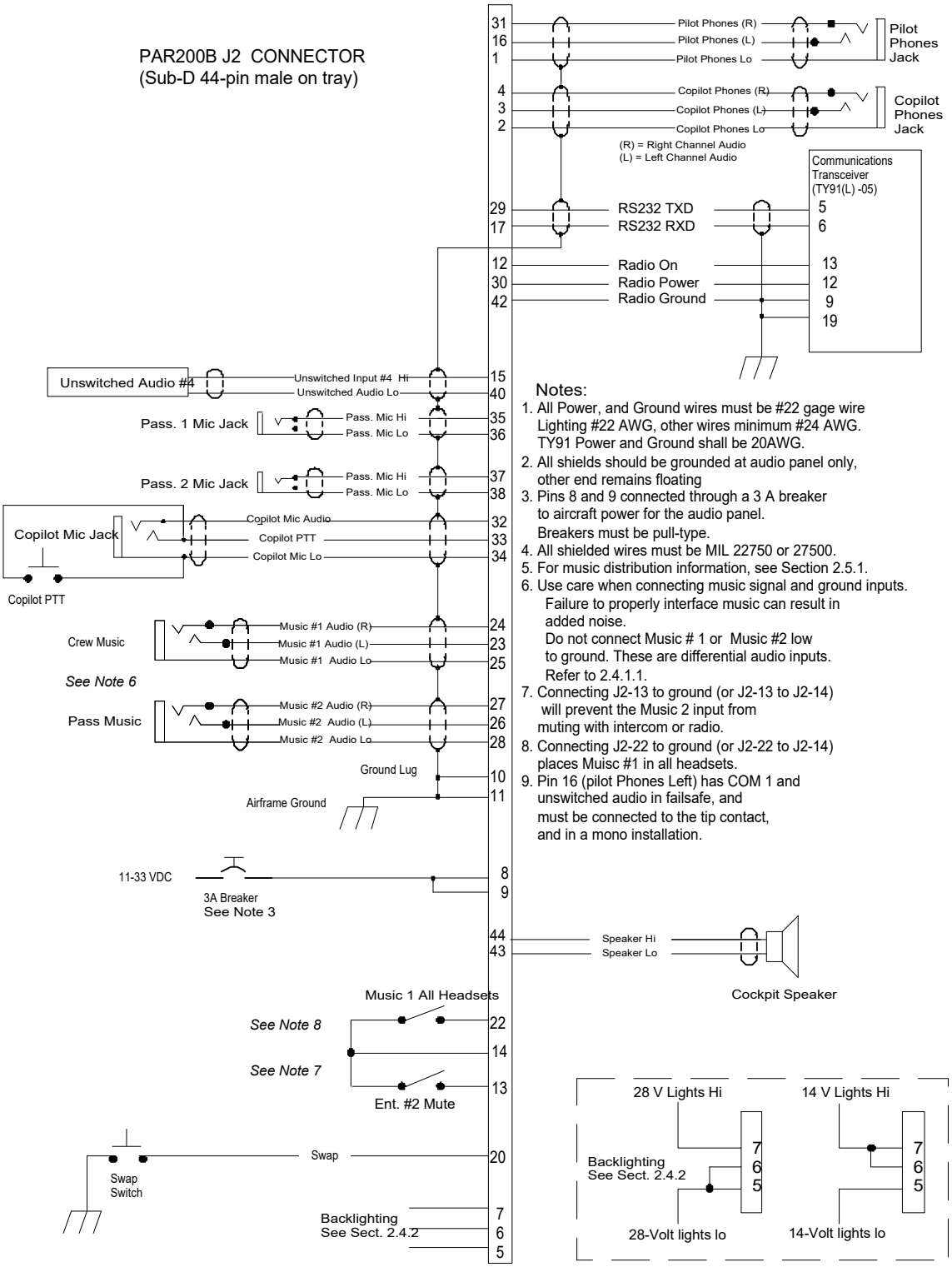

Notes:

1. All Power, and Ground wires must be #22 gage wire Lighting #22 AWG, other wires minimum #24 AWG. TY91 Power and Ground shall be 20AWG.
2. All shields should be grounded at audio panel only, other end remains floating
3. Pins 8 and 9 connected through a 3 A breaker to aircraft power for the audio panel. Breakers must be pull-type.
4. All shielded wires must be MIL 22750 or 27500.
5. For music distribution information, see Section 2.5.1.
6. Use care when connecting music signal and ground inputs. Failure to properly interface music can result in added noise. Do not connect Music # 1 or Music #2 low to ground. These are differential audio inputs. Refer to 2.4.1.1.
7. Connecting J2-13 to ground (or J2-13 to J2-14) will prevent the Music 2 input from muting with intercom or radio.
8. Connecting J2-22 to ground (or J2-22 to J2-14) places Muisc #1 in all headsets.
9. Pin 16 (pilot Phones Left) has COM 1 and unswitched audio in failsafe, and must be connected to the tip contact, and in a mono installation.

PAR200B with Expansion Wiring (P/N 050-228-0302 & 11636R)

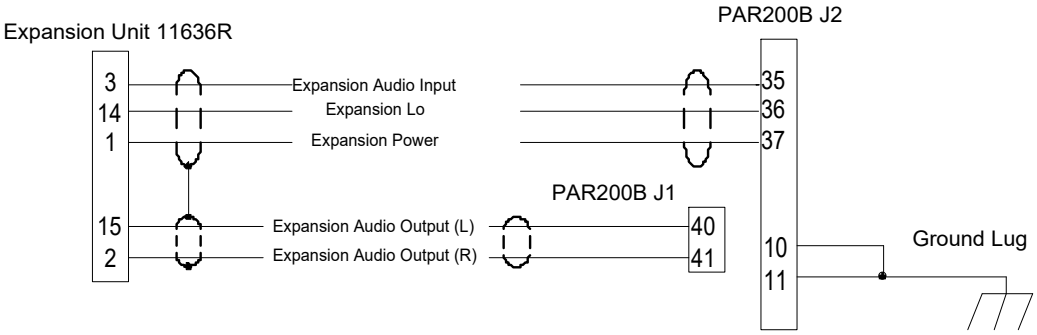

For full wiring information, refer to IntelliPAX Installation Manual, 200-250-0006

Appendix E – Instructions for FAA Form 337 and continuing air-worthiness

9.1 Instructions for FAA Form 337, Audio Panels

One method of airworthiness approval is through an FAA Form 337, *Major Repair and Alteration (Airframe, Powerplant, Propeller, or Appliance)* In the case of the PAR200B, you may use the following text as a guide.

Installed audio selector and 6-place intercom, PS Engineering PAR200B, part number 050-228-(XXXX) in (*location*) at station . Installed per *AC43.13-2B, Chapter 2, paragraph 23* (Instrument Panel Mounting). Installed per PS Engineering *Installation Operators Manual* p/n 200-228-(XXXX), revision (), dated ( ).

These units are FAA-Approved under TSO C139 for audio amplifiers, and a partial TSO C169a for communications transceivers, and meets appropriate environmental qualifications outlined in RTCA DO-160G as appropriate for this aircraft.

Interface to existing aircraft radios in accordance with installation manual and in compliance with practices listed in *AC43.13-2B*, Chapter 2. All wires are Mil-Spec 22759 or 27500. Connection to aircraft dimmer bus is _____. Power is supplied to the unit through a 3A circuit breaker (type and part number), and total electrical load does not exceed _____% of the electrical system capacity with the PAR200B added.

Aircraft equipment list, weights and balance amended. Compass compensation checked. A copy of the operation instructions, contained in PS Engineering document 202-228-( ), revision ( ), dated ( ), is placed in the aircraft records. All work accomplished listed on Work Order_____.

9.2 Instructions for Continuing Airworthiness, Audio System

Sample ICA Checklist for PS Engineering Audio System:

Section	Item	Information
1	Introduction	Installation of audio control panel with integrated VHF communications controller and intercommunications system.
2	Description	Installation as described in manufacturer's installation manual referenced on FAA Form 337, including interface with other avionics audio as required.
3	Controls	See installation and operator's guide referenced on FAA Form 337.
4	Servicing	None Required
5	Maintenance Instructions	On Condition, no special instructions
6	Troubleshooting	In the event of a unit problem, place the unit into "off," "fail-safe" and/or "emergency" mode. This allows pilot communications using COM 1. Follow checkout instructions in the installation manual referenced on the FAA Form 337. For a specific unit fault, contact the manufacturer at (865) 988-9800 for special instructions.
7	Removal and replacement information	Removal: Using a 3/32" Allen-head wrench, carefully unscrew the locking screw located in the center of the unit. While turning the wrench CCW, gently pull on the EDGES of the bezel until the unit is free from the mounting tray. Installation: Engage the locking screw at the back. Turn the locking screw CW, while applying slight pressure to the edges of the bezel. Do not over tighten!
8	Diagrams	Not applicable
9	Special Inspection Requirements	Not Applicable
10	Protective Treatments	Not Applicable
11	Structural Data	Not Applicable
12	Special Tools	None
13	Not Applicable	Not Applicable
14	Recommended Overhaul Periods	None
15	Airworthiness Limitations	Not Applicable
16	Revision	To be determined by installer

9.3 ICA for Trig TY91 Radio:

Other than for periodic functional checks required by the regulations, the TY91 VHF radio has been designed and manufactured to allow "on condition maintenance". This means that there are no periodic service requirements necessary to maintain continued airworthiness, and no maintenance is required until the equipment does not properly perform its intended function. When service is required, a complete performance test should be accomplished following any repair action. Repairs should only be carried out in accordance with Trig Avionics Limited service procedures.

Appendix F – RTCA DO160G Environmental Qualification Form

Audio Selector Panel/Intercom/Communications Transceiver Controller

Part Number: 050-228-( )

FAA TSO Number: C139, C169a EASA ETSO C139, 2C169a

Manufacturer: PS Engineering Incorporated 9800 Martel Road Lenoir City TN 37772

Conditions	Section	Conducted Tests
Temperature and Altitude	4.0	Equipment tested to CAT A1 & C1
Low Temperature	4.5.1 4.5.2	-55° C Survival, -20°C Low Operating (A1) -40 Low Short Term Operating
High Temperature	4.5.4	+85°C Survival, +70°C High Short Time Operating + 55˚C High Operating
In-flight Loss of Cooling	4.6.1	Not Applicable, no cooling required
Altitude	4.6.2	35,000' unpressurized (C1)
Decompression	4.6.3	Not Applicable
Overpressure		Not Applicable
Temperature variation	5.2	Equipment tested to Category B (5˚/Minute)
Humidity	6.0	Equipment tested to Category A
Shock	7.0	Equipment tested Standard B
Operational	7.2	Equipment tested to Category E
Crash Safety	7.3	Equipment tested to Category E
Vibration	8.0	Equipment tested to Category S & R
Explosion	9.0	Category X, not tested
Waterproofness	10.0	Category X, not tested
Fluids Susceptibility	11.0	Category X, not tested
Sand and Dust	12.0	Category X, not tested
Fungus	13.0	Category X, not tested
Salt Spray	14.0	Category X, not tested
Magnetic Effect	15.0	Equipment tested to Category Z
Power input	16.0	Equipment tested to Category B(X)(X)
Voltage Spike	17.0	Equipment tested to Category A
Audio Frequency Susceptibility	18.0	Equipment tested to Category B
Induced Frequency Susceptibility	19.0	Equipment tested to Category A
Radio Frequency Susceptibility	20.0	Equipment tested to Category TT
Radio Frequency Emission	21.0	Equipment tested to Category M
Lightning Induced Transient Susceptibility	22.0	Equipment tested to Category XXA2E2
Lightning Direct Effects	23.0	Category X, not tested
Icing	24.0	Category X, not tested
ESD	25.0	Category X, not tested