Integrated Back-up Battery System

Model: IBBS-12v-6ah

The ***Integrated Back-up Battery System***, ***IBBS***, is an electronic system that combines a Lithium-Iron-Phosphate (Li-Fe-PO4) battery pack, a charger and switching logic in one convenient package. The IBBS provides an engineered solution to enable an endurance bus for critical loads found in aircraft. It simplifies the wiring and installation of a source of back-up power by integrating all of the key elements into a single enclosure. The ***IBBS*** system provides back-up power to critical electronic loads such as EFIS, GPS, Autopilots and engine monitor systems.

Integral to the IBBS is a lithium-iron-phosphate battery pack and a matched charging system to ensure the battery is properly charged and maintained. The system also includes switching circuitry to provide a stable source of output power during normal and emergency operations. The IBBS system also provides signals to other equipment such as EFIS systems to communicate the operating state of the main aircraft bus as well as the state of the battery.

The IBBS system connects to the standard aircraft power bus and provides an output to critical equipment that require back-up power. Additionally, the IBBS system provides surge and sag protection for connected equipment, allowing operation of critical equipment during engine starting.

 © 2021 TCW Technologies, LLC.

The IBBS system is suitable for use with equipment such as Garmin GNS and GTN series navigators, G3X series of avionics, Grand Rapids Technologies EFIS systems, Advanced Flight Systems EFIS, Dynon EFIS, and MGL EFIS, TruTrak Autopilots and EFIS, Trio Autopilots.

No other uses of the IBBS system are permitted except for those identified in this installation manual.

IBBS must be installed using the current aircraft standards and practices as shown in AC 43.13-2A/1B. The installer/builder is solely responsible for determining the suitability of the installation and use of this product.

IBBS products are protected by US Patent 8,189,305

Table of Contents

Installation Information:	pg. 3
General Product info:	pg. 5
Battery Capacity details:	pg. 7
Product Operation:	pg. 8
Instructions for Continued Airworthiness:	pg. 9
Specifications	pg. 12
Connector Pin-out	pg. 13
Mounting plate drawing	pg. 14
General Wiring diagram	pg. 15
Example Wiring diagrams	pg. 16-20
Warranty information	pg. 21

Service and Support information:

610-928-3420
www.tcwtech.com
email: support@tcwtech.com

TCW Technologies, LLC.
2955 Main Road East
Emmaus, PA 18049

© 2021 TCW Technologies, LLC.

Installation Instructions:

1. **IMPORTANT NOTE:**
Consult the attached wiring diagrams to identify wiring connections similar to your particular installation. Please note, some equipment such as GPS's and EFIS systems may be provided with multiple power inputs. For these installations the output of the IBBS must be connected to their "back-up" power input. The "back-up" power source should be provided through the IBBS product. For equipment having a single source of power, the IBBS system may be fed from a bus that remains active during engine starting, such as the master bus or it may be fed from an avionics bus that is switched off during engine starting.

2. Check that the total connected load (summed value of all four output wires) is less than the following product ratings:

IBBS-12v-6ah: 8 amps maximum continuous current
12 amps peak for radio transmissions and transient loads*
***(30 seconds max duration)**

3. Mount the IBBS in a suitable location in the aircraft. Ensure the mounting points and fasteners are suitable for the weight of the product, consult the specifications for details. The IBBS must be mounted inside the aircraft, do not mount the IBBS in the firewall forward area. Do not mount the IBBS unit up under the instrument panel unless the panel is properly ventilated to ensure heat does not build up in the area. Select an area that is accessible to allow for future battery servicing. The operating temperature range of the system is -10 C° to 60 C°, the effective charging temperature range is 0 C° to 40 C°. Select an installation location that will comply with these requirements.

4. Connect the aircraft wiring according to one of the wiring diagrams shown.
The IBBS must be powered through a properly sized circuit breaker or fuse. ENSURE the proper size wire is utilized for the input feed, output supply and ground connection.

Power Input Requirements: The IBBS has multiple power inputs.

Pin 5 provides charging and bus voltage sensing for the IBBS unit and must be connected to an aircraft power bus. When the voltage on pin 5 falls below about 11 volts the system automatically transfers the load current on the output pins to the internal back-up battery source. Pin 5 maximum current draw is 4.0 amps during charging. NOTE: pin 5 provides no information about the state of charge of the battery, it is a power input only. See pin 2 for details on battery voltage.

Pins 6,7,8 receive power that is passed-thru the IBBS unit to the loads connected to the output pins. These pass-thru power connections are optional and are only required for systems that do not have multiple power inputs. These pins can also be used if it is desired to have redundant power paths feeding the connected loads. These pins are internally wired in parallel, it is recommended to populate all three pins and join the wires together at the pass thru power breaker. Note: these pins do not individually correspond to any particular output pin (12-15).

 © 2021 TCW Technologies, LLC.

The pass-thru breaker must be sized for whatever load is connected to the IBBS outputs. The maximum combined load is 12 amps peak, 8 amps continuous. If Pins 6,7,8 are used they MUST be connected to the same power bus as Pin 5.

Output Power connections:

Pins 12,13,14,15 The IBBS-12v-6ah has four output pins. These pins provide power to the connected load. These four wires may be paralleled together for redundancy and load current sharing. Use 20 awg wire for each pin. Maximum output current of 3.5 amps per pin, and 8 amps maximum continuous combined for all four pins. The output wires of the IBBS system are protected with a single 10 amp, MINI fuse. This fuse is accessible on the side of the enclosure.

IMPORTANT NOTE ON CHANGING FUSE:
Disconnect the main product connector before changing the fuse!
Replace fuse with 10 amp, MINI fuse only

5. The Back-up Power Master switch must be utilized to turn the back-up battery system off when not in use, except for installations where the off state current requirement is less than 50 micro-amps, such as with the AFS EFIS systems. Follow the specific wiring diagram for this application. This back-up power master switch gives the pilot the ability to turn the back-up battery system off. In some installations this may be the only means to shut down the connected equipment.

6. Pin 3: The IBBS unit has a low voltage warning output, pin 3. This pin may be used to drive an LED indicator or to provide a digital signal to indicate the main input bus is in a low voltage condition. When the main input bus (connected to pin 5) falls below about 11 volts this output will drive to a low state. Maximum current sourced on this pin is 25 milliamps. Note: If this pin is connected to an engine monitor or EFIS it must include an internal pull-up resistor to function properly.

7. Pin 2: The IBBS unit has in internal battery monitor connection, pin 2. This pin allows the voltage state of the internal battery to be monitored with a separate voltage meter or analog input. This pin will only report internal battery voltage when the unit is enabled by turning the Back-up Master switch ON. A fully charged battery back will indicate about 13-14.7 volts on this pin. **Important note: the meter utilized to measure pin 2 must have an input impedance >100k ohms otherwise it will load down pin 2 and provide an artificially low voltage.**

8. Complete the installation of the wiring harness and connector prior to attaching the connector to the IBBS product. This is essential to ensure the wires do not inadvertently short together during installation. Remember, the IBBS pack is a back-up source of power and is ready to deliver output power even when the aircraft electrical system is in the off state.

 © 2021 TCW Technologies, LLC.

9. When using the IBBS product to provide back-up power to an electronic ignition system it MUST be used to back-up one and only one electronic ignition module. Do not use one IBBS to back up both electronic ignition modules in a dual electronic ignition system. Follow the wiring diagram for installation with electronic ignition module. Note, the Light Speed Electronic ignition system connects directly to aircraft battery as shown. Other brands of electronic ignition systems connect to the switched side of the aircraft master bus. Follow the instructions per the electronic ignition manufacture for your installation.

10. When using the IBBS product to provide back-up power to an electronic ignition system (CDI), pull-able circuit breakers must be used for over current protection as shown on page 18.

11. When using the IBBS product to provide back-up power to an electronic ignition system, connect one and only one CDI module to an IBBS unit. If other loads are connected to the IBBS they must be separately fused.

Product Details and General Information:

The Charging System:
The IBBS automatically maintains its internal battery pack. The internal charging circuit monitors the state of the internal battery and recharges it as necessary when the aircraft is operational. The maximum input current for battery recharging is 4.0 amps.

If the internal battery is fully discharged for any reason it may require up to two hours of recharge time with the normal aircraft bus on. NOTE: Do not attempt to recharge the IBBS product by using an external battery charger directly connected to the input of the IBBS. Battery chargers typically provide pulsating voltages that may damage the IBBS product if the system is not connected to a typical primary aircraft battery.
Also note, you cannot use a DMM connected to pin 5 to measure any meaningful value. Battery voltage may be read on pin 2 or any of the outputs pins 12-15 with the IBBS system enabled via the grounding of pin 1.

Back-up Power Master Switch:
The IBBS has one input switch connection as identified in the wiring diagrams: Back-up Power Master. This switch enables back-up power from the IBBS system to be available on the output wires when power on the normal aircraft bus falls into the range of 10-11 volts.

If the back-up power master switch is enabled and normal aircraft power falls into the range of 10-11 volts, then the internal back-up battery will be connected to the outputs and be utilized to supply back-up power to the connected load.

If the normal aircraft power bus is above 11 volts, then the outputs are energized with normal aircraft power (if the pass thru-power connections are utilized) and the back-up battery remains off-line. This operation occurs regardless of the state of the Back-up Power Master switch. This allows for automatic pass through of power during normal operation.

 © 2021 TCW Technologies, LLC.

Ground Based Recharging:

To accomplish ground-based charging, connect an approved battery charger or DC power source to the main aircraft battery and energize the main aircraft power bus by turning on the master switch, leave all other aircraft loads in their off state. Note, the ground base source of power must be able to supply the load current of all devices that can not be turned off in this nominal state, plus the 4.0 amps of IBBS recharge current. Leave the ground-based charging system connected and powered until the IBBS system completes its recharge cycle of its internal battery, for a fully discharged battery this may take up to two hours.

Alternately, a ground-based charger is available from TCW Technologies LLC., model # IBBS-12v-CHARGER-LI-FE. This charger may be used for recharging the IBBS unit as well as keeping it topped off during long term product storage. (9 months or longer)

 © 2021 TCW Technologies, LLC.

Battery Capacity:
The IBBS provides an energy capacity of 6 amp-hours at 12.8 volts when the system is fully charged and operated at 25 C°. Depending on various conditions including operating and storage temperature and age of the battery pack, the capacity of the system will vary. With a fully charged battery, the following average performance can be expected in terms of operating duration. The operating duration is for output voltage down to 10.0 volts.

Nominal Current Draw total connected load	Duration
1.5 amps	240 minutes
3.0 amps	110 minutes
6.0 amps	55 minutes

The internal battery in the IBBS system is replaceable; The IBBS product may be serviced in the field or returned to TCW Technologies, LLC. for this service. Battery life depends strongly on many factors including operating and storage temperature, number of discharge cycles and depth of discharge. The battery capacity should be checked at least annually for suitable back-up power operation of the connected equipment. When the battery capacity no longer meets the operating criteria of the aircraft it must be replaced.

Storage beyond 9 months:
If the IBBS unit is to be stored without connection to the aircraft for a period greater than 9 months, it must be connected to a source of DC power to maintain the battery's charge. Only connections to the ground terminal and the main power terminal are required. Connect Pin 5 (main power) and Pin 9 (ground) of the IBBS to any source of regulated DC power at 12-15 volts with a current capability of > 4.0 amps to accomplish full recharging. Charger model IBBS-12v-CHARGER-Li-Fe is available from TCW Technologies, LLC. to simplify this requirement, it has the mating connector installed.

Upon completion of installation:

1) The builder/operator is responsible for determining the minimum operating duration of the back-up enabled equipment.

2) The required back-up operating time for the connected equipment should be recorded in the aircraft logbook with follow-up entries confirming the annual testing results that indicate that the required operating time is satisfied.

 © 2021 TCW Technologies, LLC.

Normal Product Operation:

For normal operation the following is the recommend operating procedure, it is strongly recommended that this operating procedure be added to the aircraft operating check-list for standard procedures.

Start-up Procedure:

1) Prior to turning on the Aircraft Master Switch, turn ON the Back-up Power master switch.
2) Turn on any equipment that derives back-up power from the IBBS product.
3) Ensure the connected equipment successfully boots-up and is operating properly. (During this period of time the equipment is running off of the back-up battery in the IBBS product. This test ensures the transfer circuit and back-up battery are properly working)
4) Turn on the Aircraft Master Switch; ensure the connected equipment remains energized. (If you are utilizing a separate avionics bus, this may need to be turned ON to continue the operation equipment connected to the IBBS output.)
5) Start and operate the aircraft according to normal operating procedures.

Shut-down Procedure:

1) Shut down aircraft engine using normal procedures.
2) Shut down the Aircraft Master Switch
3) Verify that equipment that derives back-up power from the IBBS product remains ON
4) Turn-off Back-up Power Master switch, ensure that equipment powers down.
   (This procedure further ensures the operation of the transfer circuit in the IBBS product.)

Emergency Procedure for loss of main aircraft electrical power:

1) Operate the Aircraft Master Power Switch per the Emergency Procedure checklist already established for the aircraft.
2) Ensure the Back-up Master Switch is in the ON position.
3) Land aircraft as soon as practical to resolve the loss of main electrical power.

 © 2021 TCW Technologies, LLC.

Instructions for Continued Airworthiness:

On at least an annual basis the endurance capability of the IBBS system shall be confirmed and compared against the back-up endurance required for the connected equipment.

As an alternate to these tests, the IBBS unit may be returned to TCW Technologies for a loaded endurance test, contact TCW Technologies LLC. for details.

Procedure for endurance testing
All applications except electronic ignition systems

1) Turn off the Aircraft Master Switch
2) Turn on the Back-up Power Master Switch
3) Turn on all equipment connected to and supplied with back-up power from the IBBS product.
4) Measure and record at least the following information: The time until the first piece of connected equipment no longer functions or the time until the output of back-up power supply voltage drops to 9.5 volts. AVOID allowing the back-up battery voltage to fall below 9 volts.
5) After completing the endurance test, recharge the IBBS product by operating the system with the Aircraft Master Switch in the ON position for up to two hours. This may be accomplished by operating the aircraft in conditions known to not require back-up power or by powering the aircraft system on a suitable ground power source as described in the section: Ground Base Recharging.
6) Record the results of the endurance testing in the aircraft logbook.
7) If the IBBS no longer meets the endurance testing requirement, the back-up battery may need replacement.

 © 2021 TCW Technologies, LLC.

Instructions for Continued Airworthiness:

Electronic Ignition System Back-up

On at least an annual basis the endurance capability of the IBBS system shall be confirmed and compared against the back-up endurance required for the connected equipment.

As an alternate to these tests the IBBS unit may be returned to TCW Technologies for a loaded endurance test, contact TCW for details.

Procedure for endurance testing of system providing back-up power to electronic ignition systems:

COMPLETE THESE STEPS IN ORDER! Perform these tests with the aircraft properly secured on the ground, these are not flight test procedures.

1) Start the aircraft using normal starting procedures, including turning ON the Back-up Master switch

2) Select engine operation based on the use of only the electronic ignition module provided with back-up battery power.

3) PULL the 5 amp breaker feeding the Back-up Master Switch, confirm engine continues to run.

4) PULL the 7.5 amp breaker feeding pins 6,7,8 of the IBBS, confirm the engine continues to run.

5) Perform the following; test A or test B:

Test A: abbreviated battery test:

Monitor engine operation and voltmeter reading on any of pin 12,13,14,15, the back-up power output. Confirm back-up voltage begins above 12.0 volts and for a period of 15 minutes remains above 11.0 volts. If these requirements are met the battery pack is satisfactory.

Test B: full endurance test:

Operate the engine on the electronic ignition system for the required minimum run-time requirement (typically 60 minutes) monitor the back-up battery voltage on the voltmeter connected to an output pin, the battery voltage must remain above 10 volts for the duration of the test. If this requirement is met the battery pack is satisfactory.

 © 2021 TCW Technologies, LLC.

6) Turn off the Back-up Master Switch and confirm that the engine turns off.

7) IF all these tests pass, the IBBS system is functioning properly, record the results in the aircraft logbook.

8) IF any of these tests fail, the IBBS system is not functioning properly and corrective action must take place. If the IBBS no longer meets the endurance testing requirement, the back-up battery may need replacement.

9) Return all pullable breakers to the normal ON position and ensure aircraft engine is properly returned to the off position by following normal run and shut down procedures.

10) After completing these tests, recharge the IBBS product by operating the system normally for up to two hours. This may be completed by operating the aircraft in conditions known to not require back-up power or by powering the aircraft system on a suitable ground power source as described in the section: Ground Base Recharging.

 © 2021 TCW Technologies, LLC.

SPECIFICATIONS:

Input Voltage: *	**13-15 volts DC**
Transition Voltage: **	**10.5-11.5 volts**
Input Current:	**4.0 amps max continuous on main input for charging**
Pass-thru Current:	**8 amps continuous, 12 amps peak (30 seconds)**
Output Voltage:	**10-14 volts DC during back-up operation**
Output Current:	**8 amps continuous** **12 amps peak for radio transmissions and transient load (30 second duration max)**
Battery:	**Internal sealed Li-Fe-PO4**
Charger:	**Integral high performance fast charger**
Surge Protection:	**34 volt active clamp, 1500w 10/1000uS waveform**
Wiring:	**15 pin male D-sub on product.**
Enclosure:	**Aluminum 7.7” x 2.3” x 2.65”**
Weight:	**34 oz.**
Temperature range:	**Operating: -10 C° to 60 C°** **Charging: 0 C° to 40 C°**
Connector:	**Standard density 15 pin male D-sub on product**

*Minimum input voltage for battery recharging.
**Transition voltage is the voltage level on the input that causes the system to provide output power via the internal back-up battery

 © 2021 TCW Technologies, LLC.

Wiring connector detail:

Male on IBBS unit
Female on aircraft wiring harness

View from back of connector on harness

15 pin Male Dsub on unit

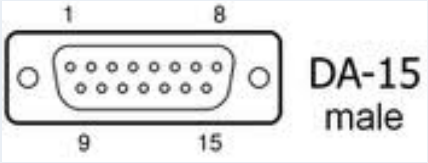

Pin #	Function
1	Enable- backup switch
2	Batt-info
3	Low Volt Warn
4	N/C
5	PWR + in, charge, sensing
6	Pwr +, pass-thru input
7	Pwr +, pass-thru input
8	Pwr +, pass-thru input
9	Ground
10	Ground
11	Ground
12	Output
13	Output
14	Output
15	Output

© 2021 TCW Technologies, LLC.

Product mounting footprint

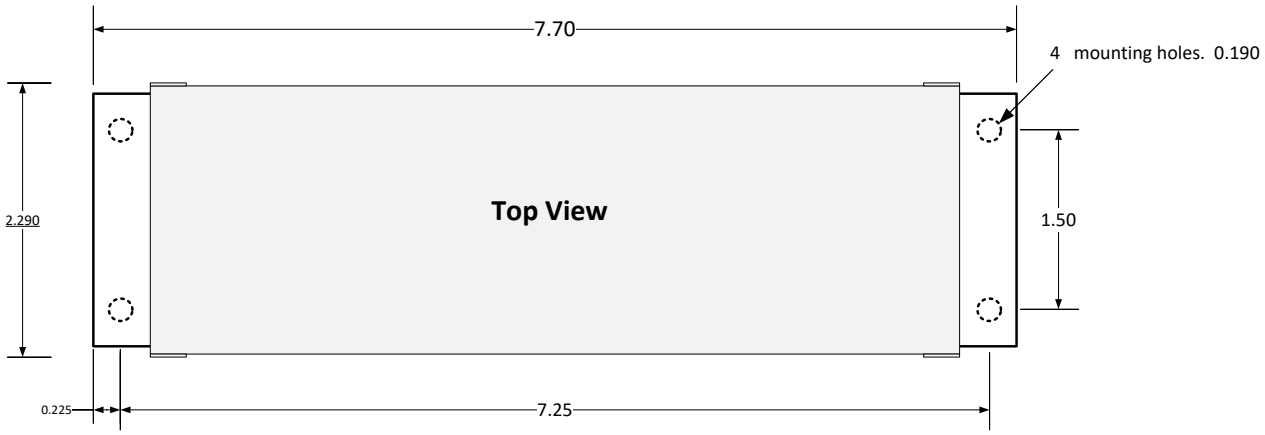

Product height 2.75”

© 2021 TCW Technologies, LLC.

General Wiring Diagram

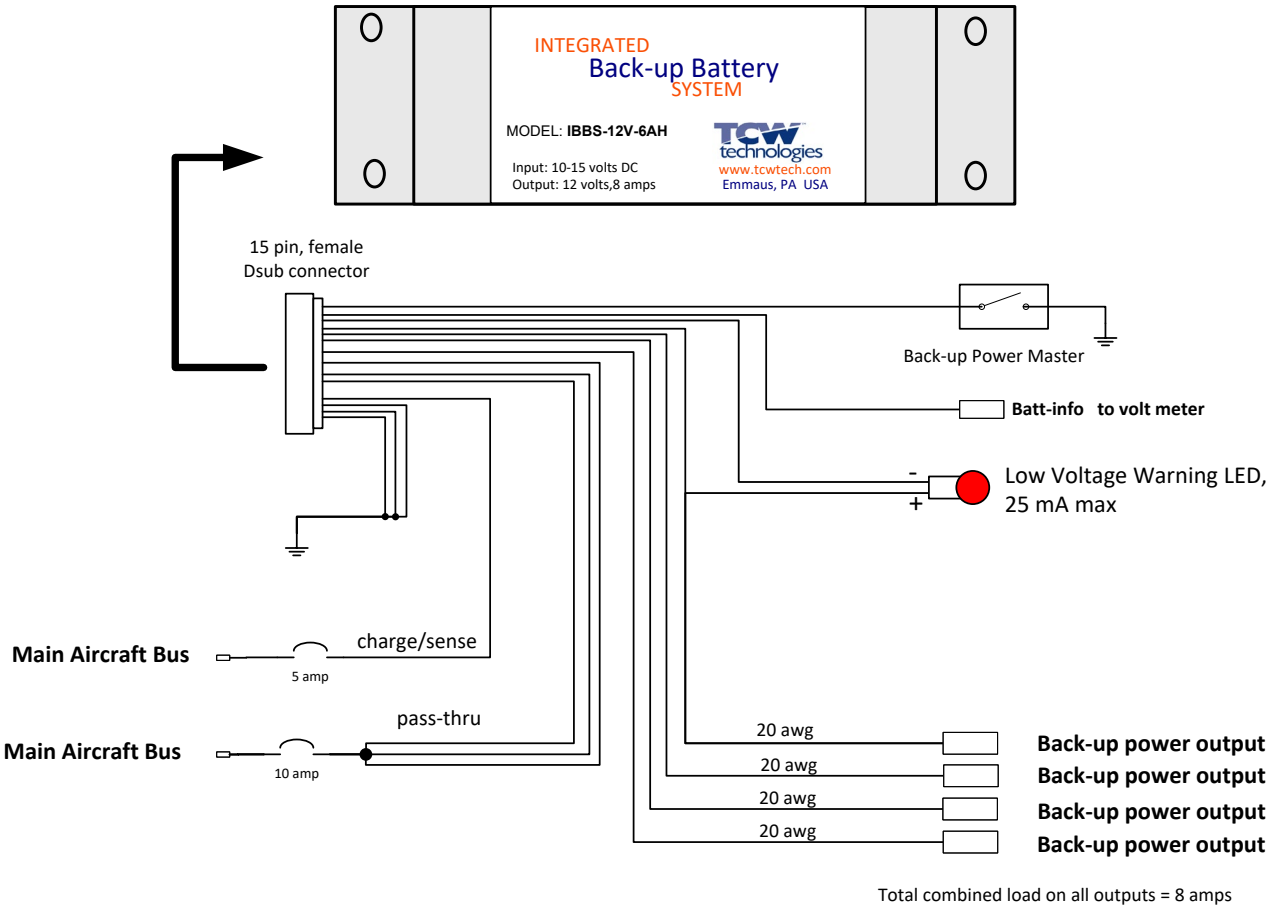

15 pin Male Dsub on unit

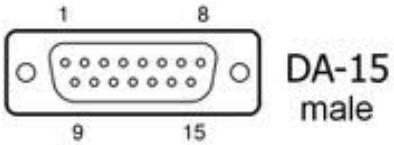

Pin #	Function	Pin #	Function
1	Back-up master switch	9	Ground
2	Batt-info	10	Ground
3	Low Volt Warn	11	Ground
4	n/c	12	Output
5	PWR + in, charge, sensing	13	Output
6	Pwr +, pass-thru input	14	Output
7	Pwr +, pass-thru input	15	Output
8	Pwr +, pass-thru input		

© 2021 TCW Technologies, LLC.

Wiring Diagram IBBS-12v-6ah

Equipment without Back-up Power Input

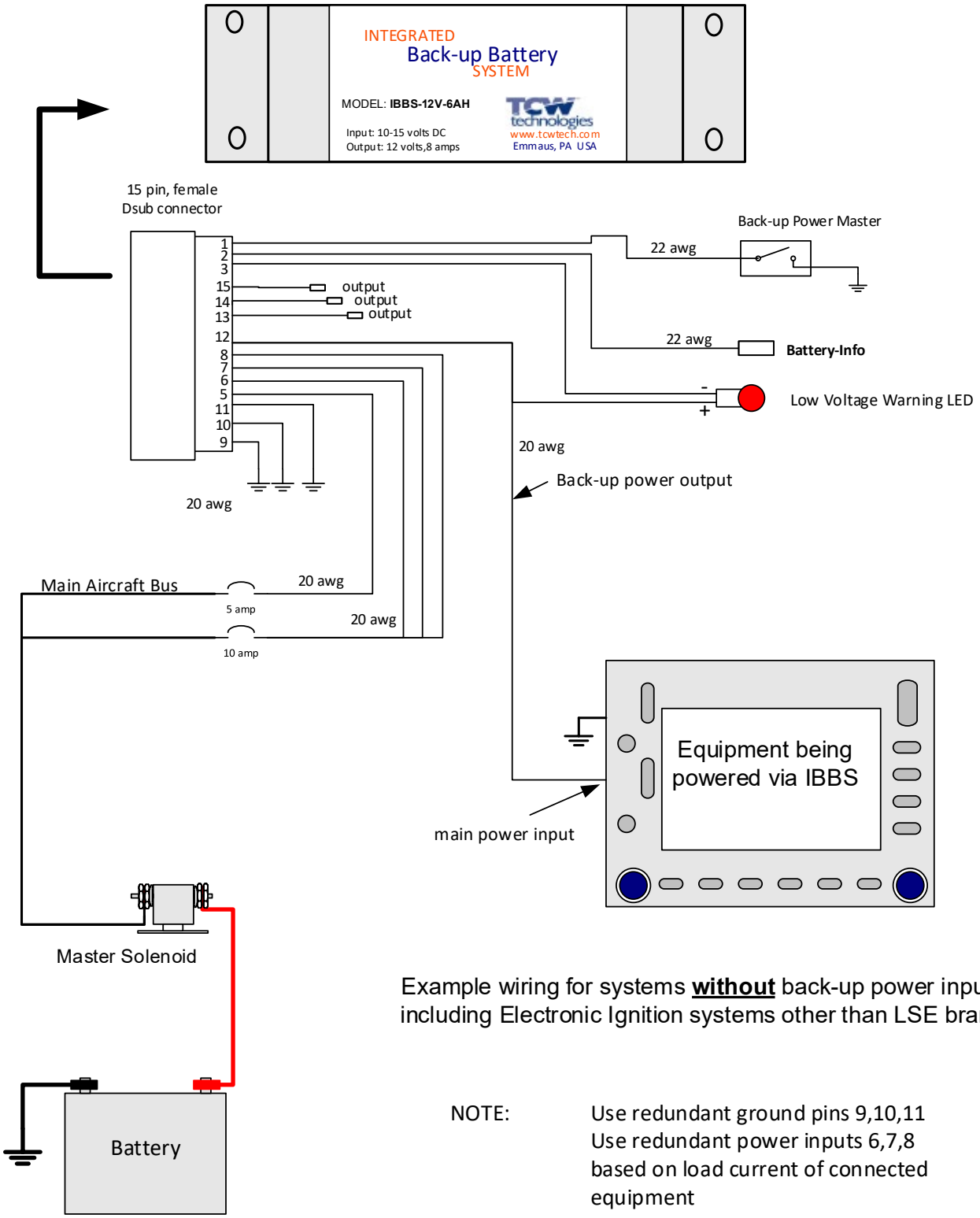

Example wiring for systems **without** back-up power inputs, including Electronic Ignition systems other than LSE brand.

NOTE: Use redundant ground pins 9,10,11
Use redundant power inputs 6,7,8
based on load current of connected equipment

© 2021 TCW Technologies, LLC.

Wiring Diagram IBBS-12v-6ah

Equipment with Back-up Power Input

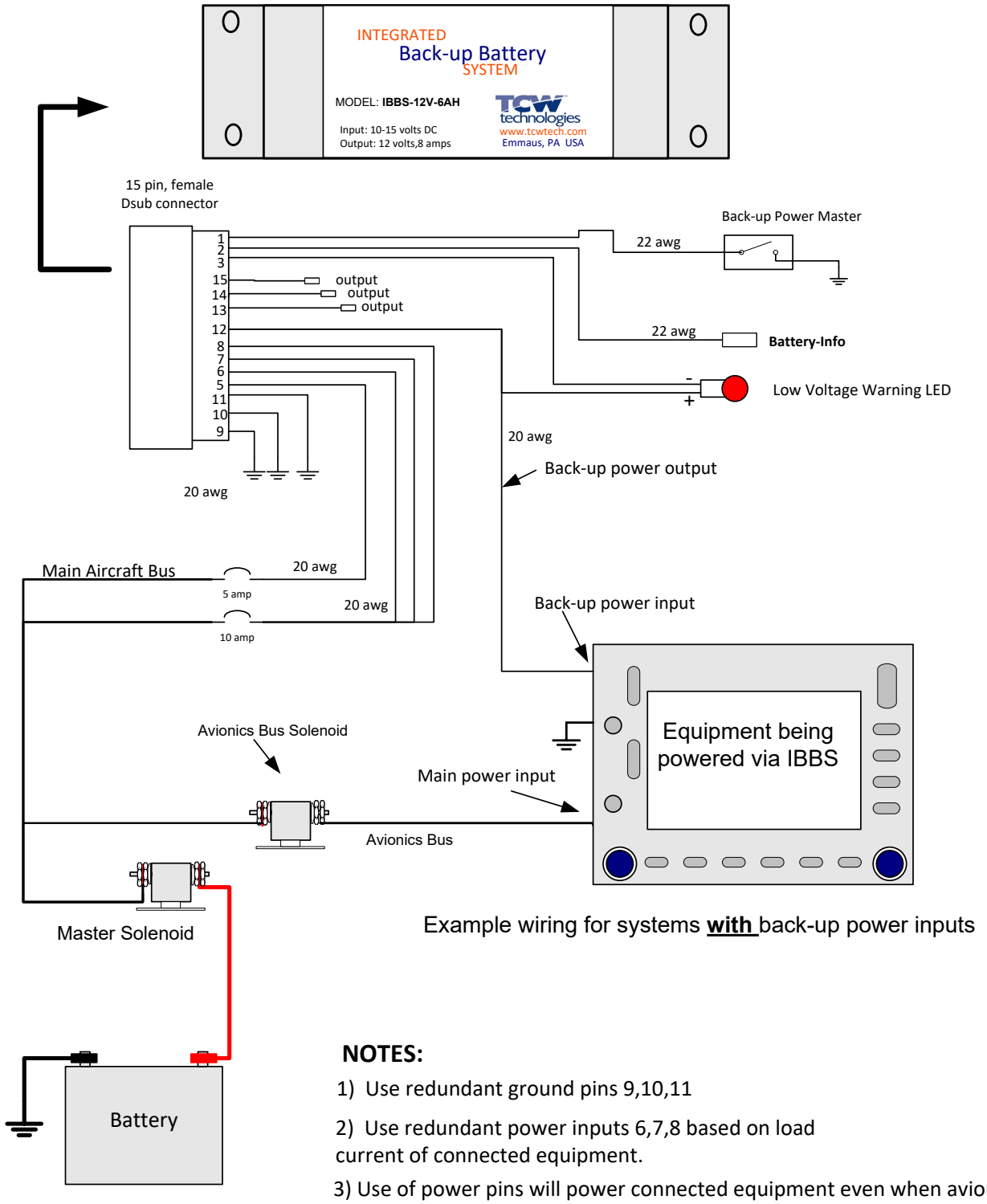

Example wiring for systems **with** back-up power inputs

NOTES:

1) Use redundant ground pins 9,10,11

2) Use redundant power inputs 6,7,8 based on load current of connected equipment.

3) Use of power pins will power connected equipment even when avionics bus is OFF via pass thru mode. Use of input pins 6,7,8 is OPTIONAL.

© 2021 TCW Technologies, LLC.

Wiring Diagram IBBS-12v-6ah

IBBS with Garmin G3x

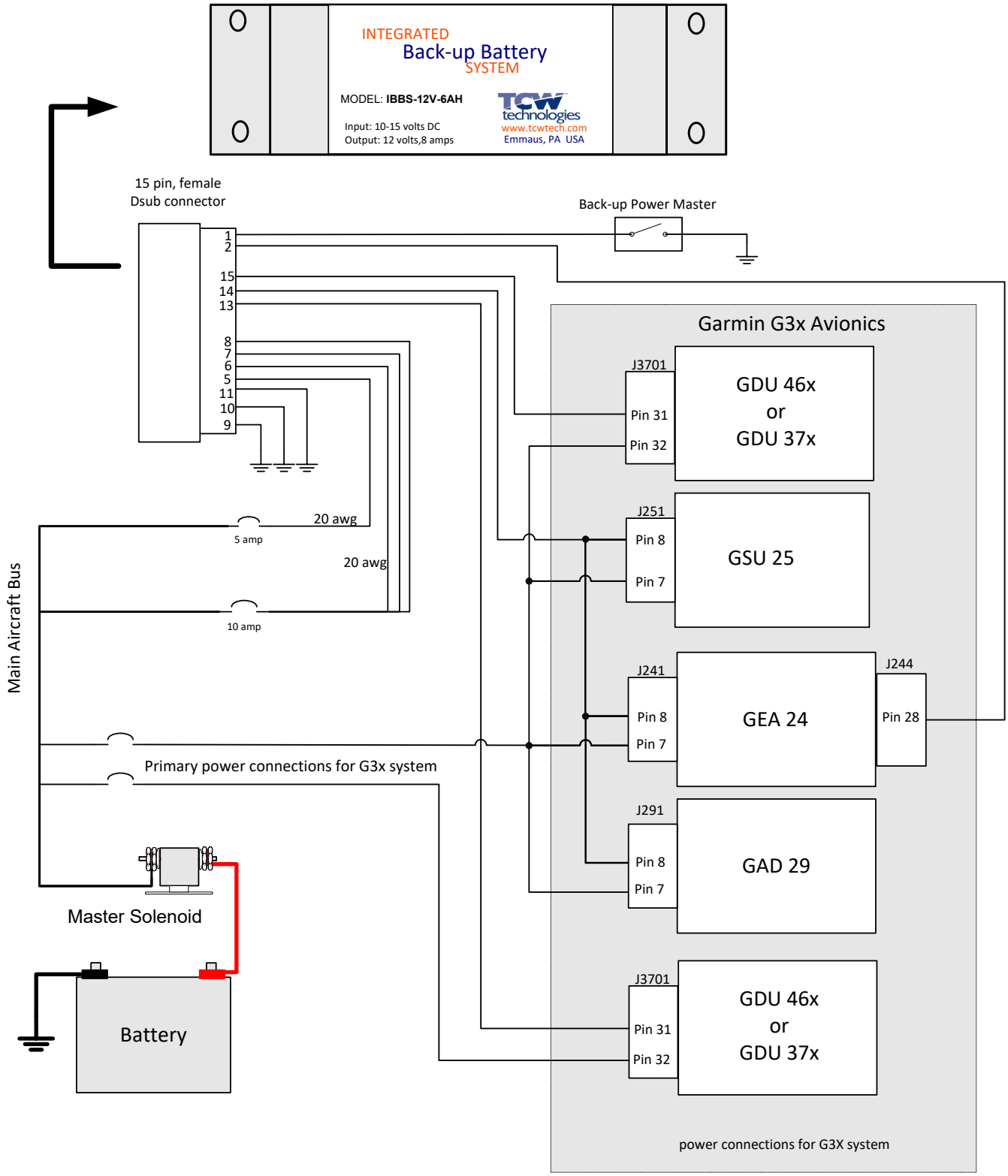

NOTES:

1) Use redundant ground pins 9,10,11

2) See Garmin install manual for all wiring details and fusing requirements

3) Enable Volts2 display in Garmin Set-up Software to display IBBS battery voltage

© 2021 TCW Technologies, LLC.

Wiring Diagram IBBS-12v-6ah

Wiring Advanced Flight Systems 5000 series

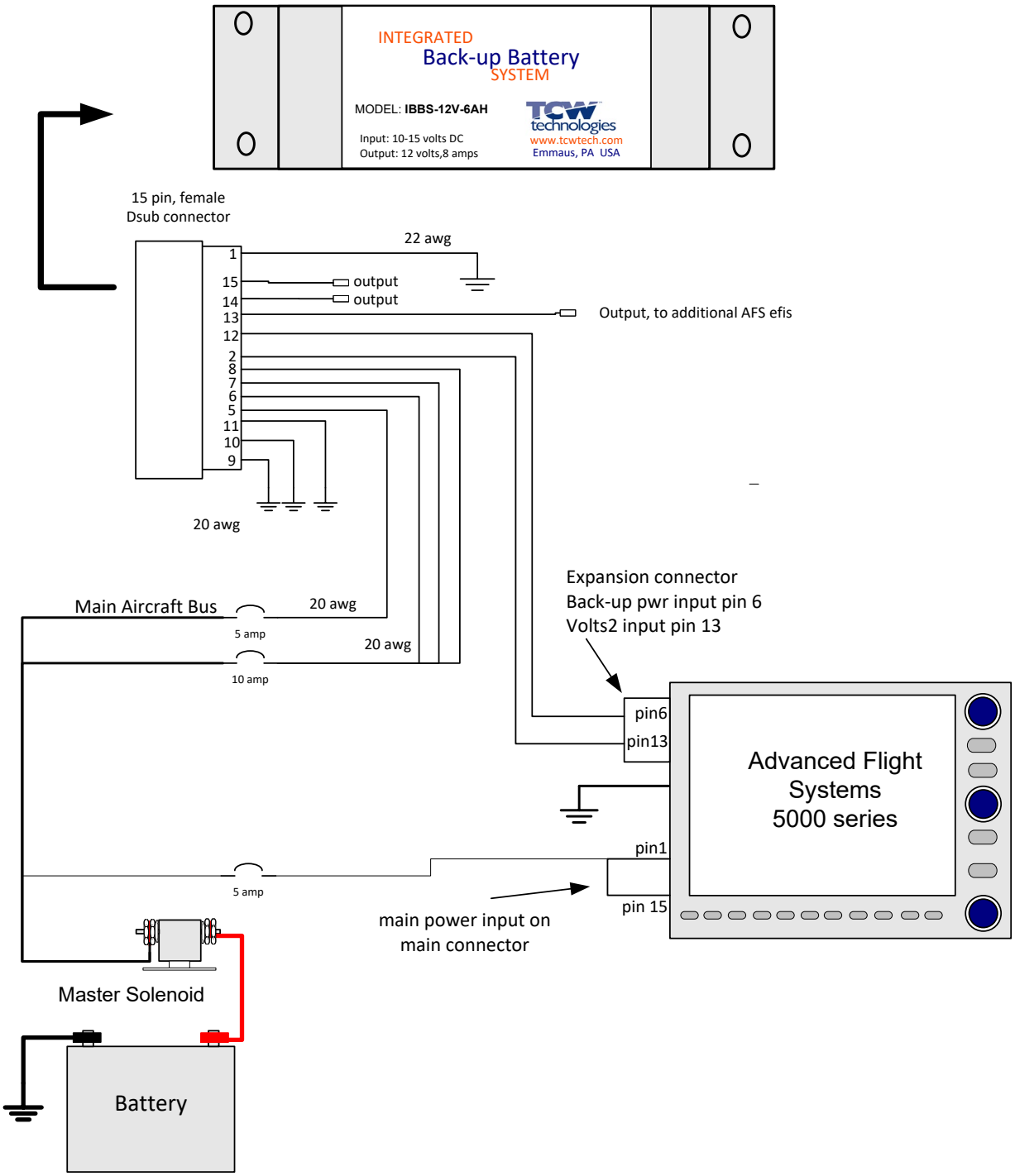

NOTES:

1) Use redundant ground pins 9,10,11

2) Use redundant power inputs 6,7,8 based on load current of connected equipment.

3) No back-up master switch required when wired per this drawing for AFS 5000 series.

4) Enable Volts2 display in AFS setup screen to display IBBS battery voltage

© 2021 TCW Technologies, LLC.

Wiring Diagram IBBS-12v-6ah

Back-up of ONE CDI in a single or dual CDI installation. Use with LSE Plasma II and III electronic ignition

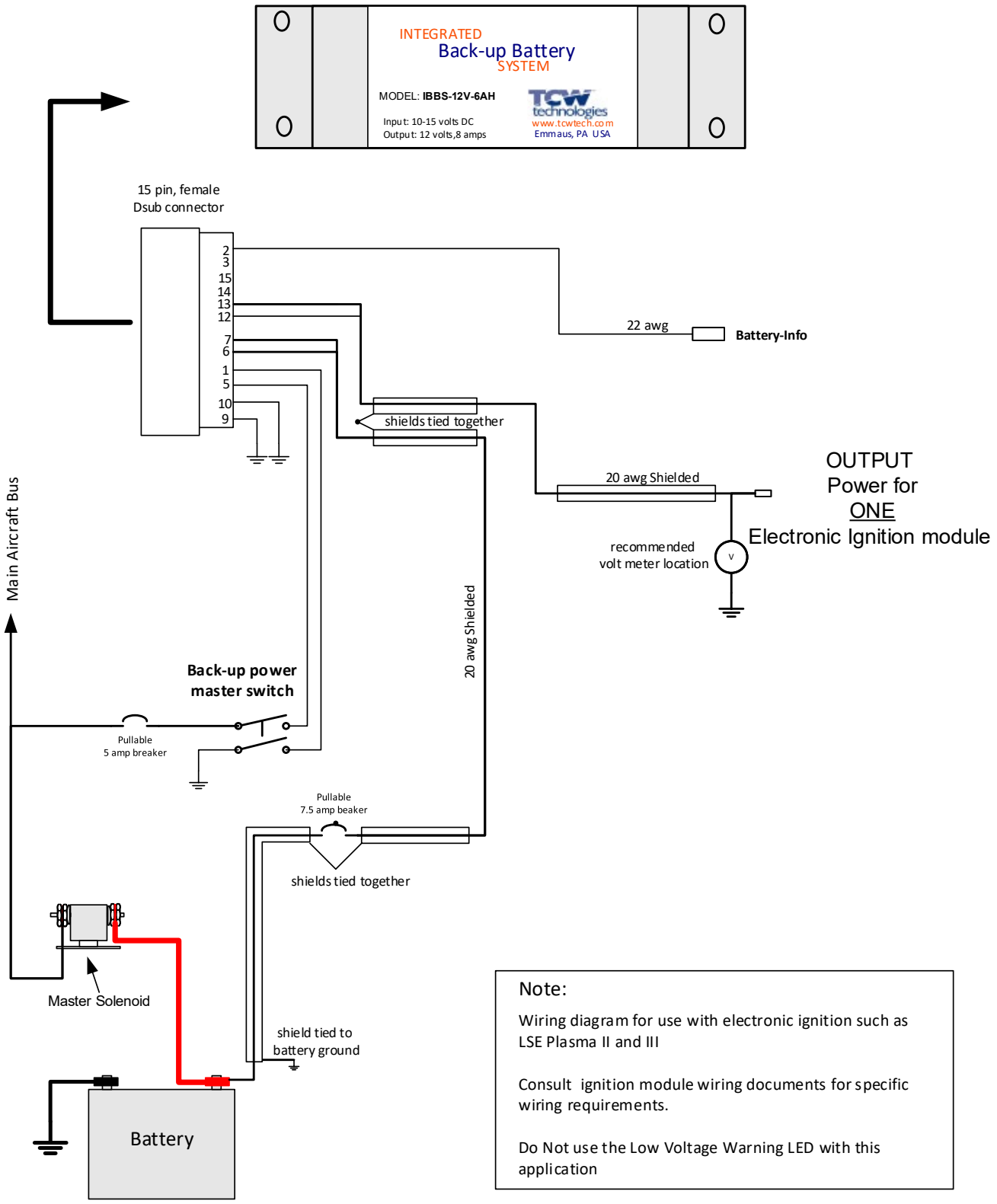

Note:

Wiring diagram for use with electronic ignition such as LSE Plasma II and III

Consult ignition module wiring documents for specific wiring requirements.

Do Not use the Low Voltage Warning LED with this application

© 2021 TCW Technologies, LLC.

TCW Technologies, LLC.

During the first 12 months from the date of purchase and subject to the conditions hereinafter set forth, TCW Technologies, LLC. (TCW) will repair or replace to the original user or consumer any portion of your new TCW product which proves defective due to defective materials or workmanship of TCW. Contact TCW Technologies for warranty service. TCW shall have and possess the sole right and option to determine whether to repair or replace defective equipment, parts or components. Damage due to equipment, environment or conditions beyond the control of TCW Technologies are NOT COVERED BY THIS WARRANTY.

LABOR, COSTS: TCW shall IN NO EVENT be responsible or liable for the cost of field labor or other charges incurred by any customer in removing and/or reaffixing any TCW product, part or component thereof.

THIS WARRANTY WILL NOT APPLY: (a) to defects or malfunctions resulting from failure to properly install, operate or maintain the unit in accordance with printed instructions provided; (b) to failures resulting from abuse, accident, or negligence; (c) to normal maintenance services and the parts used in connection with such service; (d) to units which are not installed in accordance good trade practices; or (e) to unit used for purposes other than for what it was designed and manufactured.

RETURN OR REPLACED COMPONENTS: any item to be replaced under this Warranty must be returned to TCW Technologies in Emmaus, PA, or such place as TCW may designate, freight prepaid.

PRODUCT IMPROVEMENTS: TCW reserves the right to change or improve its products or any portions thereof without being obligated to provide such a change or improvement for units sold and /or shipped prior to such change or improvement.

WARRANTY EXCLUSIONS: as to any specific TCW product, after the expiration of the time period of the warranty applicable thereto as set forth above. THERE WILL BE NO WARRANTIES, INCLUDING ANY IMPLIED WARRANTIES OR MERCHANTABILITY OR FITNESS FOR ANY PARTICULAR PURPOSE.

Some states do not allow limitations on how long an implied warranty lasts, so the above limitation may not apply to you. No warranties or representations at any time made by any representative of TCW shall vary or expand the provisions hereof.

LIABILITY LIMITATION: IN NO EVENT SHALL TCW OR ITS AFFILIATES BE LIABLE OR RESPONSIBLE FOR CONSEQUENTIAL, INCIDENTAL OR SPECIAL DAMAGES RESULTING FROM OR RELATED IN ANY MANNER TO ANY TCW PRODUCT OR PARTS THEREOF. THE SUITABILITY OF USE OF THE TCW TECHNOLGIES, LLC. PRODUCT IS TO BE DETERMINED BY THE AIRCRAFT BUILDER.

Some states do not allow the exclusion or limitation of incidental or consequential damages, so the above limitation or exclusion may not apply to you.

This Warranty gives you specific legal rights and you may also have other rights which vary from state to state. In the absence of other suitable proof of this installation date, the effective date of this Warranty will be based upon the date of manufacture plus one year. Direct All Notices To: Warranty and Product Service Department, TCW Technologies, 2955 Main Road East. Emmaus, PA 18049

 © 2021 TCW Technologies, LLC.