TRUE BLUE POWER®

First to receive FAA **TSO** on Lithium-ion batteries!

Advanced Lithium-ion Battery

TB17

Manufactured by Mid-Continent Instrument Co., Inc.

TB17

The TB17 Advanced Lithium-ion Battery uses the most sophisticated lithium-ion chemistry available, providing aviators with an unmatched advantage of power, safety, life and energy.

Ideal for the piston, turbine, and emergency power market, the TB17 starts the aircraft's engine quickly and features superior energy density — NanoPhosphate® lithium-ion cells offer 3x the energy per kilogram, resulting in a battery that is 45% lighter than lead-acid or nickel-cadmium alternatives.

This advanced battery system is engineered to deliver an overall lower cost of ownership with a two-year maintenance schedule, efficient engine starts, extended useful life and intelligent battery status communication to the cockpit.

Product features

CAPACITY	17 amp-hour battery nominal at 23°C/73.4°F
WEIGHT	16.0 lbs. (7.2 kg)
TECHNOLOGY	Advanced NanoPhosphate® lithium-ion cell chemistry
EFFICIENCY	Higher voltage during engine start — Less wear, less maintenance and increased useful life
PERFORMANCE	7 engine starts in 7 minutes
	30 minutes (at 34 amps) for complete recharge when the battery is fully discharged
	Superior performance at extreme temperatures (-40˚C/-40˚F to 70°C/158°F)
ENERGY DENSITY	Battery cells deliver 3x the energy per kilogram when compared to lead-acid and nickel-cadmium cells
INTERNAL HEATER	Automatic internal heater
PROTECTION	Overcharge, over-discharge, over-current, short circuit, over-temperature, under-temperature and charge current limiting
COMMUNICATION	Battery status to the cockpit
MAINTENANCE	Two-year maintenance interval; offers 50 – 90% savings on maintenance costs
DESIGNED AND MANUFACTURED	Wichita, Kansas, USA
WARRANTY	Two-year limited

Kansas
9400 East 34th Street North
Wichita, Kansas 67226 USA
Tel 316.630.0101 800.821.1212
Fax 316.630.0723
tbp@mcico.com

California
9722 Topanga Canyon Boulevard
Chatsworth, California 91311 USA
Tel 818.786.0300 800.345.7599
Fax 818.786.2734
tbp@mcico.com

The NanoPhosphate® Advantage

Power
Superior power by weight or volume in a cost effective solution

Safety
NanoPhosphate® is stable chemically, providing the foundation for safe systems

Life
Excellent calendar and cycle life with consistent performance over extended use

Energy
Higher useable energy means greater battery utilization and lower cost

trueblueporusa.com

Advanced Lithium-ion Battery

TB17

Manufactured by Mid-Continent Instrument Co., Inc.

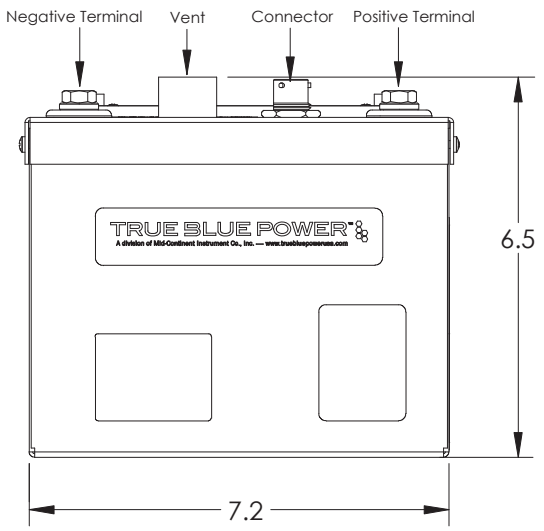

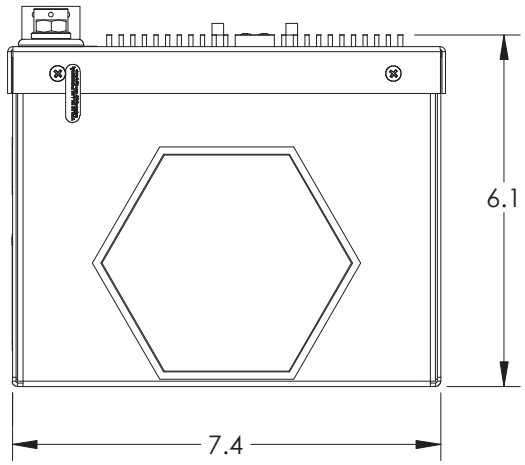

Technical specifications

CAPACITY	17 amp-hour nominal at 23°C/73.4°F
CHARGE VOLTAGE	28 VDC nominal
OUTPUT VOLTAGE	26.4 VDC nominal
OUTPUT CURRENT	500A continuous, 840A max
TECHNOLOGY	Advanced NanoPhosphate® lithium-ion cell chemistry
PROTECTION	Overcharge, over-discharge, over-current, short circuit, over-temperature, under-temperature and charge current limiting
ENERGY DENSITY	62.3 Wh/kg 83.1 Wh/liter
OPERATING TEMPERATURE	-40˚C to 70˚C (-40˚F to 158˚F)
WEIGHT	16.0 lbs. (7.2 kg)
DIMENSIONS	7.2" L x 7.4" W x 6.1" H
CONFIGURATION	7P8S; 7 parallel cells x 8 series modules
MAINTENANCE	Two-year maintenance interval; offers 50 – 90% savings on maintenance costs
CASE	Anodized aluminum, blue
CERTIFICATION	FAA TSO-C179b (Class A-4B) RTCA DO-311A RTCA DO-160G UNDOT/IATA

Product comparison

	Battery Technology	Voltage Output	Capacity (1C rate)	Weight	Maintenance	Useful Life
TB17	Lithium-ion	26.4 VDC	17 amp-hour	16 lbs.	2 years	8 years (average)
	Lead-acid	24 VDC	13.6 amp-hour	43 lbs.	Annual	2 – 4 years
	Nickel-cadmium	24 VDC	17 amp-hour	38.5 lbs.	200 – 400 hours	5 – 10 years